QUALITY POOL SUPPLY

HERITAGE
POOL SUPPLY GROUP

2023

PRODUCT REFERENCE GUIDE

2023

QUALITY POOL SUPPLY

Thank you for your continued business with Quality Pool Supply. We strive to provide the best customer service and provide you with tools that help run your business more profitably. We are going to continue using the product reference guide from 2022 which lists available products, our legacy product numbers and the updated product numbers. For the most accurate pricing and available inventory on any of our products, please visit our eCommerce site. If you have not yet created an account on the new Heritage+ platform, you can do so by visiting qps.heritagepoolplus.com or scan the QR code below.

HERITAGE+

The Heritage Pool Plus eCommerce store offers great features, such as:

- Frequently Purchased Items - Buying the same products over and over? Save time by using this feature to generate a real-time list of your company's 25 most frequently purchased items which is updated weekly!
- Exploded Parts - Easily find the parts you need by using our Heritage parts feature. Click on any part in the diagrams and instantly see pricing and availability!
- Reorder Pads – Group your common items together in a way that makes sense to you! Reorder pads make it quick and easy to order your most common items.
- Quick Order Pads - Only need to order a few items? Quick Order Pad is your tool!
- Bulk Order Pads - Do you use spreadsheets to list items to order? Simply upload that spreadsheet into a Bulk Order Pad and then easily add the products to your shopping cart!
- Product research and price lookup
- Add items from your Invoice History & Open Orders directly to your cart
- Account Statements
- Invoice History

SCAN TO REGISTER

qps.heritagepoolplus.com

BRANCH LOCATIONS

CLIO, MICHIGAN
5303 W. Vienna Road | Clio, MI 48420

Phone: 810.686.3010 | 800.968.8878
Fax: 810.686.0880 | 888.686.0880

Branch Manager: Jason Murray
Sales Director: Mike Merians - 248.343.2002
Territory Manager: Randy Nietling - 810.691.8943

BYRON CENTER, MICHIGAN
539 76th St. SW | Byron Center, MI 49315

Phone: 616.254.8330 | 800.968.9555
Fax: 616.281.5224 | 800.796.2882

Branch Manager: Brandon VanDrunen
Territory Manager: Grant Weber - 616.210.9484
Territory Manager: Ryan Hindenach - 616.210.8712

WATERFORD, MICHIGAN
3770 Dixie Hwy | Waterford, MI 48329

Phone: 248.673.6734 | 800.372.9866
Fax: 248.673.0847

Branch Manager: Ronnie Wells
Territory Manager: Mike Gauna - 810.241.9944

MAUMEE, OHIO
6519 Monclova Road | Maumee, OH 43537

Phone: 419.666.3898 | 800.968.3898
Fax: 419.666.4795 | 888.666.2982

Branch Manager: Frank Dunning
Territory Manager: Rob Morrin - 419.705.8387

DUBLIN, OHIO
7658 Fishel Drive North | Dublin, OH 43016

Phone: 614.761.2935 | 800.968.9665
Fax: 614.761.3010 | 888.968.3311

Branch Manager: Adam Liddell
Territory Manager: Rachel Hoffer - 614.202.0849

AKRON, OHIO
450 Kennedy Road | Akron, OH 44305

Phone: 330.622.4180 | 844.841.7665
Fax: 844.840.7665

Branch Manager: Sam Fickes
Territory Manager: Joe Delcoma 330.958.0015

2023 TERMS & CONDITIONS

TERMS: 5% 10th & 25th - No discount will be allowed after the discount date. Invoices dated the 1st through the 15th are due on the 25th for discount. Invoices dated the 16th through the 31st are due on the 10th for discount.

Invoices are considered past due 15 days after the discount date. A carrying charge of 1.5% will be assessed the first of each month on any past due balance. If an account becomes past due, all shipments will be on a COD basis. A fee of $50 will be charged for NSF checks. No discounts are allowed on freight charges. If UPS delivery is requested the cost will be added to the invoice.

New accounts are required to discount all invoices to maintain an open account. Established accounts are expected to discount regularly to maintain an open account.

STOCKING POLICY: All items cataloged are normally stocked unless noted. Parts are usually located in the back of each section. Uncommon parts may not be stocked in all locations. Prices, terms and product specifications are subject to change without notice. Special orders and changes to special orders must be in writing.

WARRANTY: All products are covered by the manufacturer's specific warranty. In no event will Quality Pool Supply or the manufacturer be held liable for consequential damages. No dealer or representative of Quality Pool Supply is authorized to assume any liability except as set forth above.

RETURNS: Returns must be pre-authorized by telephone before we can pick up for inspection and evaluation. We will not be liable for any returns made without pre-authorization. Special order merchandise is not returnable. The following information is required:
(1) Product number (2) Reason for the return (3) What specifically is wrong with it, if anything.
Returned merchandise must be new and in salable condition to receive credit. Items with retail prices on them will not be accepted for credit. Returns after 30 days will be subject to a 15% restock charge.

2023 HOURS OF OPERATION

SUMMER WEEKDAYS

April - September
8:00 am - 5:00 pm
(Pickup counter opens at 7:30 am

SATURDAY HOURS

May 20th - July 8th
8:00 am - Noon

WINTER HOURS

October - April
8:30 am - 4:00 pm

HOLIDAY HOURS

Closed Memorial Day - May 29th

Closed Independence Day - July 4th

Closed Labor Day - September 4th

Closed Thanksgiving & following day - November 23-24

Closed Christmas & following day - December 25-26

Closed New Years & following day - January 1-2

ORDER DEADLINE

Please have your order to us by 2 pm the previous weekday for the most dependable service. We always aim to get your orders on the next truck. Trucks are assigned to runs and loading begins by 2 pm therefore, we are unable to change to a larger truck after loading begins. Sometimes they can become filled beyond capacity by late orders.

2023 New Items

RIPPLING WATER HOT TUBS

BWT

Advanced Pro Cleaners

HIDE

Skimmer Covers

tenjam

SPLASH Pool Furniture

POOLSIDE Tech

THE ATTENDANT

HAYWARD

XE Pumps

PENTAIR

IF3 Pumps

Embassy PoolCo

Silver Interlude AG Pools

HAYWARD

HDF275 Heater

Raypak A Rheem Company

AVIA Heaters with NiTek

TheraSauna The Original Patented Far Infrared Health Sauna

Please contact your branch or sales rep for more information or to order any of these items.

QUALITY POOL SUPPLY

INDEX

A

Above Ground Ladders 24-27
Above Ground Lights 27,416
Above Ground Liners 2-9
Above Ground Pools 10-17
ADA Lifts 472-473
Adhesive (Rubber) 481
Air Blower 389
Air Switch 397
Alarm 467
Algae Shield 268
Anodes 438, 442, 488
Anti-Freeze ..... Winter Catalog
Applied Biochemists 246-247
Aqua Silk 252
A-Tops ..... Please Call
Automatic Cleaners 330
Automatic Pool Cover 54
Automatic Pool Filler 447

B

Backboard 471
Backwash Hose 72
Balboa Pack Parts 399
Ball Valves 489
Band Seal Unions 491
Basketball Hoop 514-515
Baskets (Pumps) 145
Baskets (Skimmers) 446
Bearing (Motor) 144
Blood Kit 471
Blowers 389
Bobby Sock (Filter) 72
Boeshield 482
Bolts (Flange) 496
Bonding Products 466
Boss Adhesives & Lube 484
Brightline Filter Media 70
Bromine 234, 240, 243, 255
Bromine Feeder 273-275
Brushes 315, 318, 320, 321
Bulk Chemicals 270

C

Calcium Chloride 270
Calcium Hypochlorite 270
Capacitor (Pump) 144
Cartridge (Pleatco) 80-83
Cartridge (Unicel) 74-78
CCH Sanitation System 247, 274
Check Valves 490
Chemicals 231-270
Chemical Feeders 273
Chemical Pump 292
Chemical Tank 292
ChemLink Adhesive 484
Chlorine Feeder 273-276
Chlorine Generator 280-288
Chlorine Neutralizer 242, 247, 270
Circulation Pumps 132
Clamps (SS) 487
Cleaners 330-339
Coates Heaters 189, 388
ColorQ Photometer Kit 309
Commercial Pumps 129-130
Controls 283-289
Coping 18, 40
Coping Forms 40
Coping Paint 56
Coping Strips 18
Coping Tape 56
Cord Stopper 418
Cords (Spa Pack) 402
Cover (VGB Compliant) 453-454
Cover Butler 380
Cover Lifter (Spa) 380-382
Cover Pumps ..... 134, Winter Catalog
Cover Valet 381-383
Covers (Solar) 22, 360
Covers (Spa) 374-379
Covers (Winter) ..... Winter Catalog
Covers (Automatic) 54
CuLator 267
CYA Down 268

D

DE 71
DE Grids 78
Deck Anchor 438
Deck Drains 43
Deck Jets 45, 439
Diatomaceous Earth 71
Diverter Valves 494
Diving Boards 432-435
Diving Stands 434
Dolphin Cleaner 334
DPD Tablets 309
Duct Tape 46
Durachlor 242-244

E

E-Z Patch 483
Easytouch Control 286-287
Electric Elements 401, 405
Electric Heaters 189, 388
Element (Pleatco) 80-83
Element (Unicel) 74-78
EnzyPure 268
Epoxy Paint 477
Epoxy Putty & Filler 483
Equipment Pad 476
Escutcheons 438
Eye Ball Fitting 448
Eye Bolts 469

F

Fencing 28
Fiberglass Pools 34
Filter Hose 72
Filter Sand 70
Filters 62-69
Fireman Switch 290
First Aid Kits 471
Flange (PVC) 496
Flexi-Patch 481

INDEX

Flexible PVC Pipe 486
Floating Feeders 274--278
Floats (rope) 468
Flowmeters 498
Fountain 513
Frame & Grates 454
Frog 276
Fulcrum Pad 441

G

Games 510-515
Gas Powered Pump 135
Gauges 487
Gate Valves 488
Gizzmo ..... Winter Catalog
Glass Filter Media 70
GLB (Pool) 248-250
Goggles 511-512
Green Aid 267

H

Hand Rails 436-437
Hanger (AG Liner) 18
Head Immobilizer 471
Heat Exchangers 192
Heat Pumps 184
Heat Sink Parts 189
Heat Swapper 193
Heater (Electric) 189, 388
Heaters 180-189
Heaters (Spa) 388
Heaving Line 468
Hook (Lifeguard) 468
Hooks (Hose & Pole) 319
Hooks (Rope) 469
Horizontal Liner Track 44
Hydro Air Parts 398
Hydrostatic Valves 453

I

Ideal Chemicals 232-233
Inflatables 510-512
Inlet Fittings 448
Insert PVC Fittings 506-507
Insparation Scents 384-385
Intermatic Time Clocks 290

J

Jack's Magic 264-265
Jacks Formula 327 Lube 482
Jets (Deck) 45, 439
Jets (Pool) 45
Jets (Spa) 394-395
Junction Box 418

K

King Feeders 276-278
Kreepy Krauly 338-339

L

Ladder Bumpers 442
Ladder Guard 333
Ladder Treads 442
Ladder Pad 29
Ladders (Above Ground) 24-27
Ladders (In-Ground) 437
Lake Dye 269
Leaf Eater 318
Leaf Net ..... Winter Catalog
Leaf Skimmer 314, 318, 320, 321
Leaf Trap 319
Leak Stop (Stop Leak) 482
Leak Detector 319
LED Lights 408-417
Ledge Lounger 517
LeisureTime 253-254
Life Rings 468
Lifts (ADA) 472-473
Light Bulbs 417
Light Wedge 418
Lights 408-417
Liner (Above Ground) 2-9
Liners (Inground) 36-39
Liner Hanger 18
Liner Lock 46
Liner Order Form 58-60
Liner Track 44
Liner Vacuum 476
Liquid Chlorine 231
Liquid Solar Blanket 362
Loungers 510-512, 517
Lubricant 482

M

Magic Lube 482
Main Drain 455
Maintenance Kit 20, 319
Manifold (Spa) 398
Maytronics Cleaners 334
Metal Shield 268
Metal Trap 72
Motors (Pump) 136-143
Muriatic Acid 231

N

Natural Chemistry 256-262
Nature 2 263
Nipples (PVC) 508
No Diving Label 470

O

Ocean Breeze Salt Support 245
Olympic Paint 477-479
OmniLogic Controls 284
Ozone (Spa) 387

P

Pad (Equipment) 476
Pad (Spa) 380
Pad (Step & Ladder) 29
Paint (coping) 56
Paint (pool) 477-478
Patch Kit 481
Permaseal 479
Pipe 486
Pipe Cutters 497
Pipe Repair Fitting 491
Plaster Repair 483
Plugs 449
Polaris Vac Sweep 330
Pole (Vacuum) 314, 317-322
Poly Pipe 486
Pond Chemicals 269
Pool Alarm 467
Pool Base ..... Please Call
Pool Cove 18
Pool-Krete ..... Please Call
Pool Putty 483
PoolRx 267
Pool Salt 272
Potting Compound 418
Pour A-Lid 445
Poxofill Epoxy 483
Pre-Filter 72
Pressure Gauge 483
Pressure Cleaners 330
Pro Logic Control 282-283
ProTeam 234-239
Pumps 121-135
PVC Cement 499
PVC Fittings 500-507
PVC Pipe 486
PVC Unions 492

INDEX

R

Reagents 310-313
Rebar 46
Recessed Steps 52
Red Leopard 322
Reel (Solar) 363-366
Robarb 267
Robotic Cleaner 333
Rope 468
Rope Eye 469
Rope Hook 469
Rubber Adhesive 481

S

Sacrificial Anodes 442
Saddle Tee 497
Safety Covers ..... Winter Catalog
Safety Hook 468
Safety Line Kit 468
Salt 272
Salt Chlorine Generator 280-288
Salt Support 245
Sand 70
Schmear 483
Scumball 385
SeaKlear 266
Seals (Pump) 144
Shaft Seal 144
Sight Glass (Commercial) 447
Sight Glasses (Valve) 84, 102
Signs 470
Sikaflex 221 484
Silicone Adhesive 484
Silicone Lube 482
Skim-Vac 452
Skimmer Baskets 446
Skimmer Cover 456-457
Skimmers 449
Slides 424-431
Slide Valves 488
Soda Ash 270
Sodium Bicarbonate 270
Sodium Bisulfate 270
Sodium Thiosulfate 270
Solar Cover Reels 363-366
Solar Covers 360
Solar Panels 190
Solar Pill Pool Blanket 362
Spa Covers 374-379
Spa Essentials 240
Spa Fittings 393-396
Spa Light 408-417
Spa Packs 399-403
Spa Pad 380
Spa Pumps 133
Spa Sanitizers 276
Spa Scents 384-385
Spa Vacuum 386
SpaPure Chemicals 255
Spas 370-373
Spill-Over Spa ..... Please Call
Spineboard 471
Stegmeier Forms 40
Stenner Chem Pump 292
Step Pad 29
Step Parts (Inground) 52
Steps (AG Drop-in) 26
Steps (Inground) 49-52
Steps (Spa) 380, 382
Sterilizers 272
Stop Leak 482
Submersible Pump 135
Super Blue 249
Surge Protector 291
Summit Spas 370-373
Swimline 510-512
Swim-Up Bar 516

T

Tank (Chemical) 292
Tape (Coping) 56
Taylor Test Kits 312
Teflon Tape 487
TEKS Screws 56
Telescopic Poles 314, 317-322
Test Kit Refills 311-313
Test Kits 310-312
Test Strips 306-309
Thermacell 518-519
Thermometers (Outdoor) 511-512
Thermometers (Plumbing) 487
Thermometers (Pool) 324-325
Therm-O-Rock ..... Please Call
Thread Sealant Paste 487
Tiger Shark 335
Time Clocks 290
Topside Controller 404
Transformer (12V) 418
Traps (Leaf) 319
Traps (Pump) 129, 162-163
Trash Pump 135
Tubing 486

u

Ultima Chemicals 252
Ultra Violet Sanitizer 272
Under Water Drill 476
Unicel Cartridges 74-78
Unions (PVC) 492

V

Vacuum (Liner Install) 476
Vacuum Gauge 487
Vacuum Head 315-316, 322
Vacuum Hose 326
Vacuum Hose Cuff 327
Vacuum Hose Fittings 327
Vacuum Hose Reel 327
Vacuum Pole 314, 317-322
Vacuum Release System 466
Valve Actuator 494
Valve Parts (Filter) 86
Valves (3-port) 494
Valves (Filters) 84-85
Valves (Pipe) 488-490
Variable Speed Pump 121-125
Vermiculite ..... Please Call
Vertical Liner Track 44
Vinyl Liner (Above Ground) 2-9
Vinyl Liner (Inground) 36-39
Vinyl Repair Kit 481
Volleyball 514-515

W

Wall Foam 46
Wall Foam Adhesive 46
Water Bonding Fittings 466
Water Level Control 447
Water Tubes ..... Winter Catalog
Weirs 447
Winterizing Plugs ..... Winter Catalog
Wipe Out 267

X Y Z

Yellow Out 267
Zeobrite 70
Zinc Anodes 438, 488

NOTES

INDEX

Above Ground Liners 2
Above Ground Pool Comparison 19
Armor Shield 7
Boxed Solar Covers 22
Close-Out Liners 6
Confer Ladders 25
Embassy Pools 15
Equipment Packages 21
Filter Systems 30
InnovaPlas 27
Ladder Accessories 29
Liner Accessories 18
Maintenance Items 20
Outdoor Leisure 10
Pool Fence 28
Reliant Cleaner 21

QUALITY POOL SUPPLY

GLI Pool Products

Splash Series Above Ground Liners

20 year warranty (prorated after 1st season)
Ability to add Armor Shield to your AG liner and/or upgrade your liner to 25 year limited / 3 year full warranty.

Embossed All Blue Overlap Liners

Code	New Product Number	Old Product Number		Description
	GLI12RBO4852	AG12	12'	Round 52" Wall
	GLI15RBO4852	AG15	15'	Round 52" Wall
	GLI16RBO4852	AG16	16'	Round 52" Wall
	GLI18RBO4852	AG18	18'	Round 52" Wall
	GLI21RBO4852	AG21	21'	Round 52" Wall
	GLI0524RBO4852	AG24	24'	Round 52" Wall
	GLI0527RBO4852	AG27	27'	Round 52" Wall
	GLI0528RBO4852	AG28	28'	Round 52" Wall
	GLI0530RBO4852	AG30	30'	Round 52" Wall
	GLI1224OBO4852	AG1224	12' x 24'	Oval 52" Wall
	GLI1524OBO4852	AG1524	15' x 24'	Oval 52" Wall
	GLI1530OBO4852	AG1530	15' x 30'	Oval 52" Wall
	GLI1624OBO4852	AG1624	16' x 24'	Oval 52" Wall
	GLI1632OBO4852	AG1632	16' x 32'	Oval 52" Wall
	GLI1833OBO4852	AG1833	18' x 33'	Oval 52" Wall
CALL	GLI1836OBO4852	AG1836	18' x 36'	Oval 52" Wall

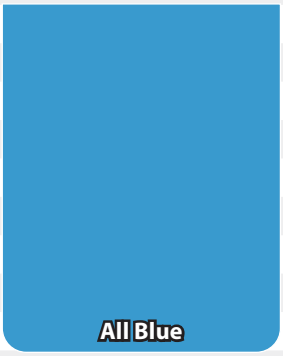

Overlap - Blue Wall with Maui Blue Floor

	GLI15RBMO4852	AG15PB	15'	Round 52" Wall
	GLI18RBMO4852	AG18PB	18'	Round 52" Wall
	GLI21RBMO4852	AG21PB	21'	Round 52" Wall
	GLI0524RBMO4852	AG24PB	24'	Round 52" Wall
	GLI0527RBMO4852	AG27PB	27'	Round 52" Wall
	GLI0528RBMO4852	AG28PB	28'	Round 52" Wall
	GLI0530RBMO4852	AG30PB	30'	Round 52" Wall
	GLI0533RBMO4852	AG33PB	33'	Round 52" Wall
	GLI1224OBMO4852	AG1224PB	12' x 24'	Oval 52" Wall
	GLI51530OBLM4852	AG1530PB	15' x 30'	Oval 52" Wall
	GLI1624OBLM4852	AG1624PB	16' x 24'	Oval 52" Wall
	GLI1632OBLM4852	AG1632PB	16' x 32'	Oval 52" Wall
	GLI1833OBLM4852	AG1833PB	18' x 33'	Oval 52" Wall
	GLI2141OBLM4852	AG2141PB	21' x 41'	Oval 52" Wall

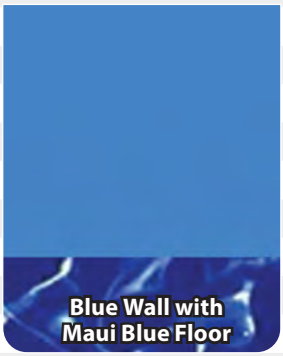

All above ground liners are flat bottom
except those designated as Expandable to 6'.

All items cataloged are normally stocked unless noted.
◆ Not Stocked ✻ While Supplies Last

Splash Series Above Ground Liners

Standard 20-year limited/one year full warranty.
Ability to add Armor Shield to your AG liner and/or upgrade your liner to 25 year limited / 3 year full warranty.

Maui Overlap Liners

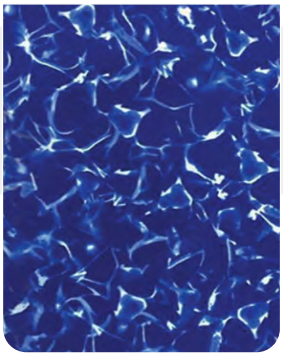

Code	New Product Number	Old Product Number	Description	
	GLI18RDMBFOL4852	AG18MA	18'	Round 52" Wall
	GLI21RDMBFOL4852	AG21MA	21'	Round 52" Wall
	GLI24RDMBFOL4852	AG24MA	24'	Round 52" Wall
	GLI27RDMBFOL4852	AG27MA	27'	Round 52" Wall
	GLI30RDMBFOL4852	AG30MA	30'	Round 52" Wall
	GLI1530OMBOL4852	AG1530MA	15' x 30'	Oval 52" Wall
	GLI1833OMBOL4852	AG1833MA	18' x 33'	Oval 52" Wall

All above ground liners are flat bottom
except those designated as Expandable to 6'.

Splash Series Above Ground Liners

Maui Blue Overlap - Full Print, Expandable to 6'

20 year warranty (prorated after 1st season)
Ability to add Armor Shield to your AG liner and/or upgrade your liner to 25 year limited / 3 year full warranty.

Code	New Product Number	Old Product Number	Description		
	GLI18RMBFO4852XP	AG18ME	18'	Round 72" Wall	
	GLI21RMBFO4852XP	AG21ME	21'	Round 72" Wall	
	GLI24RDMBOL4852X	AG24ME	24'	Round 72" Wall	
	GLI27RMBFO4852XP	AG27ME	27'	Round 72" Wall	
	GLI28RMBFO4852XP	AG28ME	28'	Round 72" Wall	
	GLI30RMBFO4852XP	AG30ME	30'	Round 72" Wall	
	GLI33RMBFO4852XP	AG33ME	33'	Round 72" Wall	
	GLI1530OMO4852XP	AG1530ME	15' x 30'	Oval 72" Wall	
	GLI1632OMO4852XP	AG1632ME	16' x 32'	Oval 72" Wall	
	GLI1833OMO4852XP	AG1833ME	18' x 33'	Oval 72" Wall	
	GLI1834OMO4852XP	AG1834ME	18' x 34'	Oval 72" Wall	
	GLI1838OMBOL52X	AG1838ME	18' x 38'	Oval 72" Wall	
	GLI2141OMO4852XP	AG2141ME	21' x 41'	Oval 72" Wall	

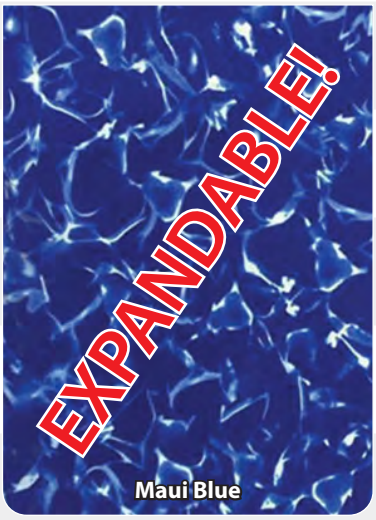

All above ground liners are flat bottom
except those designated as Expandable to 6'.

All items cataloged are normally stocked unless noted.
◆ Not Stocked ✻ While Supplies Last

Splash Series Above Ground Liners

Beaded - Golden Beach Pattern

Can be used for either J-Hook or Standard Bead Pools

20 year warranty (prorated after 1st season)
Ability to add Armor Shield to your AG liner and/or upgrade your liner to 25 year limited / 3 year full warranty.

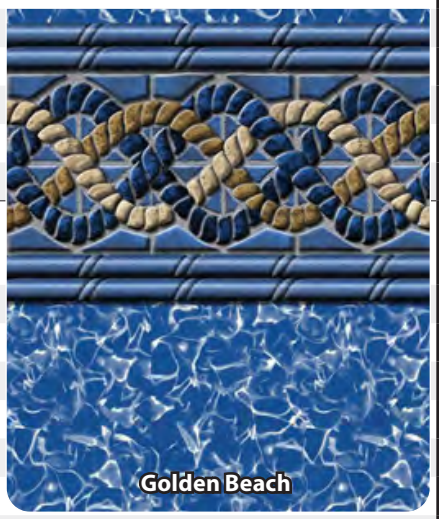

48" Beaded Liners

Code	New Product Number	Old Product Number	Description	
	GLI0021RDGOBUB48	AGB21-48GOB	21'	Round 48" Wall
	GLI0024RDGOBUB48	AGB24-48GOB	24'	Round 48" Wall
	GLI0027RDGOBUB48	AGB27-48GOB	27'	Round 48" Wall
	GLI1530OVGOBUB48	AGB1530-48GOB	15' x 30'	Oval 48" Wall
	GLI1833OVGOBUB48	AGB1833-48GOB	18' x 33'	Oval 48" Wall

52" Beaded Liners

Code	New Product Number	Old Product Number	Description	
	GLI0018RDGOBUB52	AGB18-52GOB	18'	Round 52" Wall
	GLI0021RDGOBUB52	AGB21-52GOB	21'	Round 52" Wall
	GLI0024RDGOBUB52	AGB24-52GOB	24'	Round 52" Wall
	GLI0027RDGOBUB52	AGB27-52GOB	27'	Round 52" Wall
	GLI0030RDGOBUB52	AGB30-52GOB	30'	Round 52" Wall
	GLI0033RDGOBUB52	AGB33-52GOB	33'	Round 52" Wall
	GLI1224OVGOBUB52	AGB1224-52GOB	12' x 24'	Oval 52" Wall
	GLI1526OVGOBUB52	AGB1526-52GOB	15' x 26'	Oval 52" Wall
	GLI1530OVGOBUB52	AGB1530-52GOB	15' x 30'	Oval 52" Wall
	GLI1624OVGOBUB52	AGB1624-52GOB	16' x 24	Oval 52" Wall
	GLI1632OVGOBUB52	AGB1632-52GOB	16' x 32'	Oval 52" Wall
	GLI1833OVGOBUB52	AGB1833-52GOB	18' x 33'	Oval 52" Wall
	GLI1834OVGOBUB52	AGB1834-52GOB	18' x 34'	Oval 52" Wall
	GLI2141OVGOBUB52	AGB2141-52GOB	21' x 41'	Oval 52" Wall

54" Beaded Liners

Code	New Product Number	Old Product Number	Description	
	GLI0018RDGOBUB54	AGB18-54GOB	18'	Round 54" Wall
	GLI0021RDGOBUB54	AGB21-54GOB	21'	Round 54" Wall
	GLI0024RDGOBUB54	AGB24-54GOB	24'	Round 54" Wall
	GLI0027RDGOBUB54	AGB27-54GOB	27'	Round 54" Wall
	GLI0030RDGOBUB54	AGB30-54GOB	30'	Round 54" Wall
	GLI0033RDGOBUB54	AGB33-54GOB	33'	Round 54" Wall
	GLI1530OVGOBUB54	AGB1530-54GOB	15' x 30'	Oval 54" Wall
	GLI1833OVGOBUB54	AGB1833-54GOB	18' x 33'	Oval 54" Wall

All above ground liners are flat bottom
except those designated as Expandable to 6'.

Close-Out Above Ground Liners

Beaded - Augusta Pattern

Can be used for either J-Hook or Standard Bead Pools
25 Year Warranty (prorated after 1st season)

Code	New Product Number	Old Product Number	Description		
✻	FVIAGB152652	AGB1526-52	15' x 26'	Oval 52" Wall	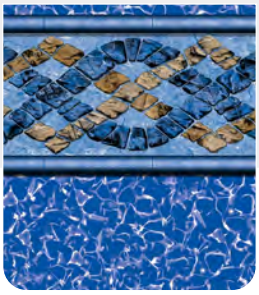
✻	FVIAGB183348	AGB1833-48	18' x 33'	Oval 48" Wall	
✻	FVIAGB214152	AGB2141-52	21' x 41'	Oval 52" Wall	

Lucia Beaded Liners

Standard 20-year limited/one year full warranty.
Ability to add Armor Shield to your AG liner and/or upgrade your liner to 25 year limited / 3 year full warranty.

	GLI1530OVLUCUB52	AGB1530-52LUC	15' x 30'	Oval 52" Wall	

All above ground liners are flat bottom
except those designated as Expandable to 6'.

All items cataloged are normally stocked unless noted.
◆ Not Stocked ✻ While Supplies Last

Code	New Product Number	Old Product Number	Description	

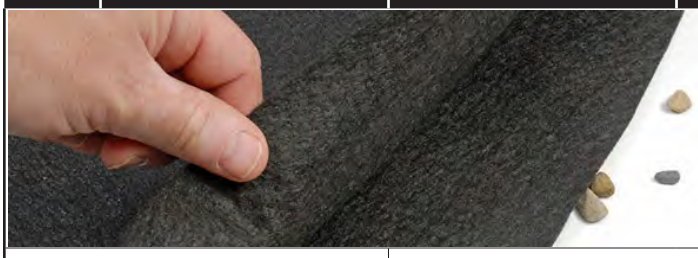

ARMOR SHIELD™ Protection System

GLI Pool Products

Armor Shield provides an important protective layer between a vinyl swimming pool liner and its sand or soil base. Unlike traditional foam padding, Armor Shield is a Polypropylene Geotextile blend that minimizes cuts and punctures to the vinyl liner caused by rocks, roots, grass and even GLASS! Armor Shield also reduces convective heat loss and provides a comfortable floor pad for the comfort of pool goers.

GLI will extend the warranty of your GLI Splash Series Above Ground Liner* from 20/1 years to 25/3 years upon installations that include the purchase of Armor Shield.

	GLI700015RBK160	ARMOR15	15'	Round Precut Package
	GLIARMOR1833	ARMOR18	18'	Round Precut Package
	GLI700021RBK160	ARMOR21	21'	Round Precut Package
	GLIARMOR24	ARMOR24	24'	Round Precut Package
	GLIARMOR28	ARMOR28	28'	Round Precut Package
	GLIARMOR30	ARMOR30	30'	Round Precut Package
	GLI701530OBK160	ARMOR1530	15' x 30'	Oval Precut Package
	GLIARMOR1833	ARMOR1833	18' x 33'	Oval Precut Package

THE CURE FOR THE AG LINER INTERNET BLUES
BECOME A LINER DOCTOR

For years you've known you can do it better than any Do-It-Yourself Above Ground Liner installation, but the internet has made it tough for you to compete. Not anymore! With GLI's EXCLUSIVE Liner Doctors™ program you can now CURE your Above Ground Liner internet blues, and be your customers ONLY choice when choosing an Above Ground Liner and dealer for installation!

PROGRAM BENEFITS:

- For Brick & Mortar Dealers
- Seven Above Ground Liner patterns that are EXCLUSIVE to the Liner Doctors Program
- Exclusive pattern with Textured Sure-Step Upgraded Floor - Breeze Creek - for added strength, durability, and grip.
- Extended Warranty & Water Labor Allowance

Ask your QUALITY POOL SUPPLIES Representative for more details on this program today!

*Limited Quantities Available for Platinum Creek, Breeze Creek, North Fork Creek and Gold Creek

GLI Pool Products

www.glipoolproducts.com • 800-448-2343

Liner Doctor Above Ground Liners

Willow Creek Beaded

Unibead, Virgin Vinyl, Heavyweight
3 year full/20 year limited warranty with up to $300 labor coverage

52" Beaded Liners

Code	New Product Number	Old Product Number	Description	
	GLI0018RDWILUB52	AGB18-52WIL	18'	Round 52" Wall
	GLI0021RDWILUB52	AGB21-52WIL	21'	Round 52" Wall
	GLI0024RDWILUB52	AGB24-52WIL	24'	Round 52" Wall
	GLI0027RDWILUB52	AGB27-52WIL	27'	Round 52" Wall
	GLI0030RDWILUB52	AGB30-52WIL	30'	Round 52" Wall
	GLI1530OVWILUB52	AGB1530-52WIL	15' x 30'	Oval 52" Wall
	GLI1833OVWILUB52	AGB1833-52WIL	18' x 33'	Oval 52" Wall

54" Beaded Liners

Code	New Product Number	Old Product Number	Description	
	GLI0018RDWILUB54	AGB18-54WIL	18'	Round 54" Wall
	GLI0021RDWILUB54	AGB21-54WIL	21'	Round 54" Wall
	GLI0024RDWILUB54	AGB24-54WIL	24'	Round 54" Wall
	GLI0027RDWILUB54	AGB27-54WIL	27'	Round 54" Wall
	GLI0030RDWILUB54	AGB30-54WIL	30'	Round 54" Wall
	GLI1530OVWILUB54	AGB1530-54WIL	15' x 30'	Oval 54" Wall
	GLI1833OVWILUB54	AGB1833-54WIL	18' x 33'	Oval 54" Wall

All above ground liners are flat bottom
except those designated as Expandable to 6'.

QUALITY POOL SUPPLY

SOLSTICE STR

30 YEAR WARRANTY (1 YEAR FULL)

Outdoor LEISURE

www.outdoorleisurepool.com

POOL FEATURES

- 48" & 52" Wall height
- 6" Krystal Kote protection steel top ledge
- 5" Krystal Kote protection steel uprights
- One piece ledge cover
- Steel top & bottom plates
- Includes Coping

Liner NOT included. See pages 2-9.

Code	New Product Number	Old Product Number	Description
		Round, 48" Wall *48" Solstice pools feature the Solstice frame with Summit/Summerfield pattern.	
	WLBSOL2448	SOL24-48	24'
		Round, 52" Wall *52" Solstice pools feature the Solstice frame with the standard Starlite wall pattern as shown above.	
◆		SOL12	12'
	WLBSOL15	SOL15	15'
	WLBPSOL1852	SOL18	18'
	WLBPSOL2152	SOL21	21'
	WLBPSOL24	SOL24	24'
	WLBPSOL2752	SOL27	27'
		Store Displays	
	WLBSOL2X48	SOL2X48	24" x 48"
◆		SOL8	8'

For registration and to file warranty claims please visit: www.mypoolwarranty.com

All items cataloged are normally stocked unless noted.

◆ Not Stocked ✻ While Supplies Last

EPIC STR

40 YEAR WARRANTY (2 YEARS FULL)

Outdoor LEISURE

www.outdoorleisurepool.com

POOL FEATURES

- 52" Wall height
- 7" steel top ledge
- 6" steel uprights
- Two piece ledge cover
- Steel stabilizer & bottom rail
- Steel top & bottom plates
- Includes Coping

Liner NOT included. See pages 2-9.

Code	New Product Number	Old Product Number	Description
		Round, 52" Wall	
◆		EPIC12	12'
	WLBPPI1552SSPS31	EPIC15	15'
	TPOPE1852SSPSS31	EPIC18	18'
	WLBEPIC21	EPIC21	21
	TPOPE2452SSPSS31	EPIC24	24
	WLBEPIC27	EPIC27	27
	TPOPE3052SSPSS31	EPIC30	30
		Narrow Yard Oval 52" Wall	
	WLBEPIC1224	EPIC1224	12' x 24'
	WLBEPIC1530	EPIC1530	15' x 30'
	TPOPEGB183352SSP	EPIC1833	18' x 33'
		Store Displays	
	WLBEPIC2X52	EPIC2X52	24" x 52"
◆		EPICVINTAGE	Full Height Sample with Stand

For registration and to file warranty claims please visit: www.mypoolwarranty.com

All items cataloged are normally stocked unless noted.
◆ Not Stocked ✻ While Supplies Last

QUALITY POOL SUPPLY

SIMBIO RTR

50 YEAR WARRANTY (4 YEARS FULL)

Outdoor LEISURE

www.outdoorleisurepool.com

POOL FEATURES

- 54" Wall height
- 7" Resin top ledge
- 5" Steel uprights
- Two piece ledge cover
- Steel stabilizer
- Resin bottom rail & plates
- Does NOT Include Coping

Liner NOT included. See pages 2-9.

Code	New Product Number	Old Product Number	Description
		Round, 54" Wall	
◆		SIM12	12'
CALL	TPOPZ1554RSRB11	SIM15	15'
	TPOSIM18X54	SIM18	18'
	TPOPZ2154RSRB11	SIM21	21'
	TPOSIM24X54	SIM24	24'
	TPOPZ2754RSRB11	SIM27	27'
	TPOPZ3054RSRB11	SIM30	30'
	TPOPZ3354RSRB11	SIM33	33'
		Narrow Yard Oval 54" Wall	
	TPOSIM153054	SIM1530	15' x 30'
	TPOPZYE183354RSR	SIM1833	18' x 33'
		Store Displays	
	TPOSIM2X54	SIM2X54	24" x 54"
◆		SIMVINTAGE	Full Height Sample with Stand

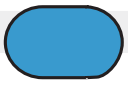

For registration and to file warranty claims please visit: www.mypoolwarranty.com

All items cataloged are normally stocked unless noted.

◆ Not Stocked ✻ While Supplies Last

MAESTRO

60 YEAR WARRANTY (5 YEAR FULL)

Outdoor LEISURE

www.outdoorleisurepool.com

POOL FEATURES

- 52" Wall height
- 6" Resin top ledge
- All resin frame (including top & bottom track)
- Two piece ledge cover
- Does NOT Include Coping

Liner NOT included. See pages 2-9.

Stocked in Clio only

Code	New Product Number	Old Product Number	Description
		Round, 52" Wall	
	TPOMAE21X52	MAE21	21'
	TPOMAE24X52	MAE24	24'
	TPOMAE27	MAE27	27'
		Narrow Yard Oval, 52" Wall	
	TPOMAE1530	MAE1530	15' x 30'
	TPOMAE1833	MAE1833	18' x 33'
		Store Displays	
	TPOMAE2X52	MAE2X52	24" x 52"
◆		MAEVINTAGE	Full Height Sample with Stand

For registration and to file warranty claims please visit: www.mypoolwarranty.com

All items cataloged are normally stocked unless noted.
◆ Not Stocked ✻ While Supplies Last

QUALITY POOL SUPPLY

REFLEXION

60 YEAR WARRANTY (5 YEARS FULL)

Outdoor LEISURE

www.outdoorleisurepool.com

POOL FEATURES

- 54" Wall height
- 10" Resin top ledge
- 9" Resin uprights
- Two piece ledge cover
- Resin stabilizer & bottom rail
- Resin top & bottom plates
- Does NOT Include Coping

Liner NOT included. See pages 2-9.

Code	New Product Number	Old Product Number	Description
		Round 54" Wall	
	TPOREF18	REF18	18'
	TPOREF21	REF21	21'
	TPOREF24	REF24	24'
	TPOREF27X54	REF27	27'
	TPOREF30	REF30	30'
	TPOREF33	REF33	33'
		Narrow Yard 54" Wall - stocked in Clio Only	
CALL	TPOREF1530	REF1530	15' x 30'
CALL	TPOREF1833	REF1833	18' x 33'
◆		REF2143	21' x 43'
		Store Displays	
	TPOREF2X54	REF2X54	24" x 54"
◆		REFVINTAGE	Full Height Sample with Stand

For registration and to file warranty claims please visit: www.mypoolwarranty.com

All items cataloged are normally stocked unless noted.

◆ Not Stocked ✻ While Supplies Last

COASTAL

- 6" Steel top rails & top covers
- 5" Steel verticals
- Corrugated pool wall for flexibility and vertical strength
- Includes Coping
- Large, pre-punched skimmer and eyeball return openings eliminate sharp edges that could cut the liner during installation
- Pre-punched for Hayward (SP1091WM) or Reliant (B8412) widemouth skimmer

Liner NOT included. See pages 2-9.

Embassy PoolCo
A DIVISION OF HOFFINGER INDUSTRIES, INC.

Code	New Product Number	Old Product Number	Description
		Round, 52" Wall	
	EPOCOAST15	COAST15	15'
	EPO5461811552	COAST18	18'
◆		COAST21	21'
	EPO5462411552	COAST24	24'
	EPO5462711552	COAST27	27'
		Oval, 52" Wall	
	EPO5460511552	COAST3015	30' x 15'

All items cataloged are normally stocked unless noted.
◆ Not Stocked ✻ While Supplies Last

QUALITY POOL SUPPLY

Code	New Product Number	Old Product Number	Description

CENTURY

- Strapless Ovals allow for a deep end.
- Rugged, baked enamel steel, 9" wrap-around top rails and verticals in a creamy tan.
- Sophisticated, taupe-colored resin top connectors.
- 52", hot dipped galvanized copper bearing steel wall in a soft elegant Century pattern.
- All Oval pools come with Space-saver side support (Narrow Yard)
- Corrugated pool wall for flexibility and vertical strength.
- Staggered bolt wall closure provides maximum strength and wall stability
- Large, prepunched skimmer and eyeball return openings eliminate sharp edges that could cut the liner during installation.
- 20 year prorated limited warranty on all pool components.
- Pre-punched for Hayward (SP1091WM) or Reliant (B8412) wide mouth skimmer
- Includes Coping

Liner NOT included. See pages 2-9.

Embassy PoolCo
A DIVISION OF HOFFINGER INDUSTRIES, INC.

Round, 52" Wall

◆		CEN12	12'
◆	EPO5391573052	CEN15	15'
	EPO5391873052	CEN18	18'
	EPOCEN21	CEN21	21'
	EPOCEN24	CEN24	24'
	EPO5392773052	CEN27	27'
	EPO5393073052	CEN30	30'

Strapless Narrow, Oval, 52" Wall

	EPO5394273052	CEN2412	12' x 24'
	EPO5394673052	CEN2416	16' x 24'
◆		CEN2816	16' x 28'
	EPOCEN3216	CEN3216	16' x 32'
	EPOCEN3418	CEN3418	18' x 34'
	EPO5391173052	CEN4121	21' x 41'

All items cataloged are normally stocked unless noted.

◆ Not Stocked ✻ While Supplies Last

Code	New Product Number	Old Product Number	Description

ESCAPE

- 8" Resin top rails & top covers
- 8" Steel Verticals
- Strapless Ovals allow for a deep end
- All Oval pools come with Space-saver side support (Narrow Yard)
- Pre-punched for Hayward (SP1091WM) or Reliant (B8412) widemouth skimmer
- Includes Coping

Liner NOT included. See pages 2-9.

Embassy PoolCo
A DIVISION OF HOFFINGER INDUSTRIES, INC.

Round, 54" Wall

EPOESC1854	ESC18-54	18'	
EPOESC2154	ESC21-54	21'	
EPOESC2454	ESC24-54	24'	
EPOESC2754	ESC27-54	27'	

Strapless Narrow Yard, 54" Wall

EPO5492611454	ESC3216-54	16' x 32'	
EPO5494811454	ESC3418-54	18' x 34'	

For registration and to file warranty claims please visit: www.mypoolwarranty.com

All items cataloged are normally stocked unless noted.
◆ Not Stocked ✻ While Supplies Last

QUALITY POOL SUPPLY

Code	New Product Number	Old Product Number	Length	Description
		Liner Accessories		
	STMSCLIP	SCLIP	53"	Hanger for beaded liners
	CSYQP2581	QP-2581	56"	Hanger for beaded liners Compatible with Century, Silver Seas, & Summer Breeze pools.
	SWL8914	SWL8914	2'	Coping Strips for top of wall on overlap liners (Case of 500 saves 10%)
	GLAPNP192XLB	PC	4'	Pool Cove - 48" - Peel and stick strip, high density blue cove. 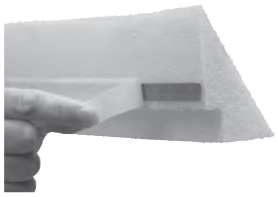

Liner and Accessories and Specifications

		Pool Size Specifications			Number of Required Accessories					
								Fence Kits*		
Pool Size	Shape	Circumference	Pool Sections	Approximate Gallons	(SCLIP) 53" Liner Track	(PC) Pool Cove	(SWL8914) 2' Coping	A	B	C
12'	Round	38'	10	3,300	9	10	20	1	0	1
15'	Round	48'	11	5,100	11	12	24	1	1	0
18	Round	57'	13	7,300	13	15	30	1	1	1
21'	Round	67'	15	9,950	16	17	34	1	1	2
24'	Round	76'	17	13,000	18	19	38	1	3	0
27'	Round	85'	19	16,450	20	22	44	1	3	1
30'	Round	95'	21	20,300	22	24	48	1	3	2
33'	Round	104'	23	24,600	24	26	52	1	5	0
12' x 24'	Oval	62'	16	8,350	14	16	32	1	2	1
15' x 30'	Oval	78'	20	11,500	18	20	39	1	4	1
16' x 24'	Oval	68'	16	9,900	16	17	34	1	2	1
16' x 32'	Oval	84'	20	13,700	19	21	42	1	4	0
18' x 34'	Oval	90'	22	16,300	21	23	46	1	4	1
21' x 41'	Oval	106'	26	23,000	24	27	54	1	6	0

*See page 28

All items cataloged are normally stocked unless noted.

◆ Not Stocked ✻ While Supplies Last

Above Ground Pool Side-By-Side Comparison

Pool Model	Solstice	Epic	Simbio	Maestro	Reflexion	Coastal	Century	Escape
Height	52"	52"	54"	52"	54"	52"	52"	52" or 54"
Structure Color	Pewter grey	Pearl	Pearl	Champagne	Champagne	Grey	Tan	Beige/ Earth Tone
Top Ledge	6" steel	7" Steel	7" Resin	6" Resin	10" Resin	6" steel	9" Steel	8" Resin
Upright	5" steel	6" Steel	5" Steel	Resin	9" Resin	5" steel	9" Steel	8" Steel
Bottom Rail	Steel	Steel	Resin	Resin	Resin	Steel	Steel	Steel
Stabilizer	Steel	Steel	Steel	Resin	Resin	Steel	Steel	Steel
Bottom Plate	Steel	Steel	Resin	Resin	Resin	Steel	Steel	Steel
Top Plate	Steel	Steel	Steel	Resin	Resin	Steel	Steel	Steel
Foot Cover	No	No	Yes	Yes	NA	No	No	No
Ledge Cover	1 pc	2 pc	2 pc	2 pc	2 pc	1 pc	2 pc	2 pc
Wall pattern	Starlite	Sonata	Ellipse	Diamonds	Signature			
Oval System	Buttress	Narrow Yard	Narrow Yard	Narrow Yard	Narrow Yard	Strapless Narrow	Strapless Narrow	Strapless Narrow
Warranty	30 years - 1 year 100%	40 years - 2 years 100%	50 years - 4 years 100%	60 years - 5 years 100%	60 years - 5 years 100%	20 years - 2 years 100%	20 years - 2 years 100%	30 years - 3 years 100%

All items cataloged are normally stocked unless noted.
◆ Not Stocked ❋ While Supplies Last

Code	New Product Number	Old Product Number	Description
		Maintenance Kits	All Maintenance Kits include vacuum head, thermometer, leaf skimmer, brush and test kit.
Ocean BLUE WATER PRODUCTS			
	OBP010021	OB010021	Ocean Blue Maintenance Kit
RELIANT®			
	BCIB8706	QBD0860	Reliant Maintenance Kit
RAINBOW			
	PENR131076	R131076	Rainbow Maintenance Kit
RAINBOW		**Accessories**	
	PENR201350	R201350	Rainbow Vinyl Vacuum. For 1¼" or 1½" hose
	PENR121026	R121026	Rainbow Plastic Economy Skimmer
	PENR111366	R111366	Rainbow Economy 18" Curved Brush
	PENR500072	R500072	6-12' Blue Telescopic Pole with Vinyl Grip

All items cataloged are normally stocked unless noted.

◆ Not Stocked ✻ While Supplies Last

Code	New Product Number	Old Product Number	Description
RELIANT®		**Above Ground Pool Cleaner**	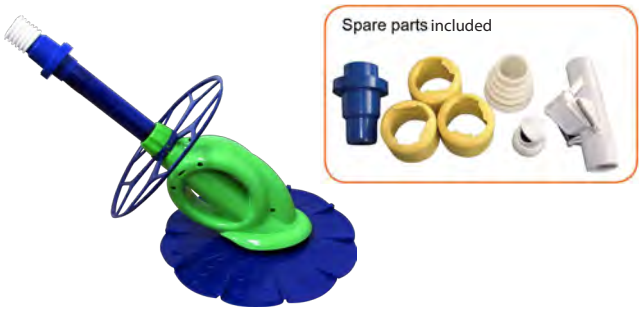
	BCIB7321	B7321	**Reliant Diaphragm Cleaner for AG Pools** Includes 26' of hose, regulator valve, connector, weights, and skimmer adapter. Easy assembly and no tools required, ready to clean your pool in minutes, quiet operation. Automatic regulator valve adjusts the working speed of the cleaner from 8' - 12' per minute.
		Above Ground Equipment Package	
	AGKITSILVER	AGKitSilver	**Silver Equipment Package**

Silver Equipment Package includes the following components:

7100X - Confer Evolution A-Frame Ladder,
Warm Gray, 48-54"

Pump/Filter Kit *SRCF2019DO1160*
Sta-Rite 19" Filter and 1½ HP Dynamo Pump

Sand *3 Bags Included*

Maintenance Kit *OB010021*
Ocean Blue Cleaning Kit Includes: Vacuum head, thermometer, leaf skimmer, brush and test kit

8-16 Vac Pole *R500070*
Blue telescopic pole, outside cam & vinyl grip, high quality drawn aluminum tubing.

30' Vac hose *65432*
1¹/4" x 30', 3-year warranty, blue & black hose.

Skimmer *SP1091WM*
Hayward wide mouth skimmer - includes SP1023 inlet, (2) hose adapters & SP11041 Skim Vac.

Test Strip *511244*
AquaCheck Yellow 4 in 1, 50 strips. Tests for free chlorine, pH, cyanuric acid and total alkalinity.

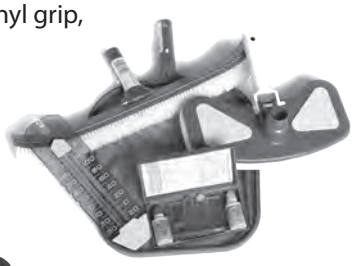

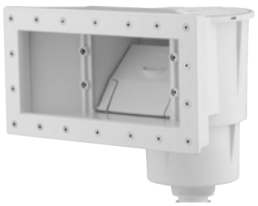

Dealers may substitute components depending on pool size.
Prices will vary based on substitutions.

QUALITY POOL SUPPLY

Code	New Product Number	Old Product Number	Description

IDEAL POOL PRODUCTS

Boxed Solar Covers

***Warranty** - 1st year FULL Warranty - After 1st year customer calls the factory.

Quantity Discounts
One invoice - One destination
5 covers - 5% discount
25 covers - 10% discount

	MCAIBXSC12RD4BB	QSR812B	12'	Round		
	MCAIBXSC15RD4BB	QSR815B	15'	Round		
	MCAIBXSC16RD4BB	QSR816B	16'	Round		
	MCAIBXSC18RD4BB	QSR818B	18'	Round		
	MCAIBXSC21RD4BB	QSR821B	21'	Round		
	MCAIBXSC24RD4BB	QSR824B	24'	Round		
	MCAIBXSC28RD4BB	QSR828B	28'	Round		
	MCAIBXSC30RD4BB	QSR830B	30'	Round		
	MCAIBXSC33RD4BB	QSR833B	33'	Round		
	MCAIBXSCO12244BB	QSO81224B	12'	x	24'	Oval
	MCAIBXSCO15274BB	QSO81527B	15'	x	27'	Oval
	MCAIBXSCO15304BB	QSO81530B	15'	x	30'	Oval
	MCAIBXSCO16254BB	QSO81625B	16'	x	25'	Oval
	MCAIBXSCO16324BB	QSO81632B	16'	x	32'	Oval
	MCAIBXSCO18344BB	QSO81834B	18'	x	34'	Oval
	MCAIBXSCO18384BB	QSO81838B	18'	x	38'	Oval
	MCAIBXSCO21414BB	QSO82141B	21'	x	41'	Oval

Haviflex

Vacuum Hose (blue/black - no swivel cuff)

	HAVBO52811418HFC	65428	1¼"	x	18'
	HAVBO52811421HFC	67005	1¼"	x	21'
	HAVBO52811424HFC	65430	1¼"	x	24'
	HAVBO52811427HFC	67004	1¼"	x	27'
	HAVBO52811430HFC	65432	1¼"	x	30'
	HAVBO52811436HFC	65433	1¼"	x	36'
	HAVBO52811442HFC	65434	1¼"	x	42'

Premium Spiral Filter Hose Silver/Black - *Features fused/leak-proof cuffs*

	HAVMF40011403CBP	60-305-03	1¼"	×	3′
	HAVMF40114004CBP	65504	1¼"	×	4′
	HAVMF40011406CBP	60-305-06	1¼"	×	6′
	HAVMF40011408CBP	65506	1¼"	×	8′
	JED6034503	60-345-03	1½"	×	3′
	JED6034504	60-345-04	1½"	×	4′
	JED6034506	60-345-06	1½"	×	6′
	JED6034508	60-345-08	1½"	×	8′
✻	HAV65503	65503	1¼"	×	3′
✻	HAV65505	65505	1¼"	×	6′
✻	HAV65509	65509	1½"	×	3′

Heavy Silver Hose

	HAVML155112003HF	772930	1½"	x	3'
	HAVML155112006HF	772931	1½"	x	6'
	HAVML155112009HF	772932	1½"	x	9'
CALL	HAVML155112012HF	772933	1½"	x	12'

All items cataloged are normally stocked unless noted.

◆ Not Stocked ✻ While Supplies Last

NOTES

Quality You Can Count On

Confer Plastics

Step Enclosure System

Swimming Pool Steps

Our all-resin steps have a five-year warranty and are made in the USA.

Model 7200

In-Ground Pool Step

Check out our complete line of pool and spa products at your distributor.

New

THE *EDGE* SPA STEP

Storage Step

Signature Spa Step

CONFER *Plastics inc.*

visit conferplastics.com or call 800-635-3213 or 716-693-2056
97 Witmer Road • North Tonawanda, NY 14120-2421

PROUDLY MADE IN THE USA

Code	New Product Number	Old Product Number	Description

ABOVE:
The Roll-Guard barrier slides along a track just behind the steps on the pool side, allowing for an entrapment free system while the pool is in use.

LEFT:
When the pool is not in use, the Roll-Guard barrier slides into a lockable track, covering the outside steps - keeping your pool safe!

CONFER plastics inc.

Roll-Guard A-Frame Safety Ladder

- Aesthetically pleasing contemporary design
- Weight guideline: 300 lbs.
- Large 5" x 18" wide Comfortreads
- Curved side rails designed with strength in mind
- Inner side rails include integrated side barriers to prevent entry behind the ladder
- Easy assembly with minimal hardware
- Adjusts to fit pools 48" to 56" tall
- Lockable Roll-Guard Barrier (lock included)
- Extra large top platform
- Just fill side rails with water to prevent floating, no sand or bricks needed
- Fits pool top seats up to 14" wide
- Five year, pro-rated warranty

	CPI7200	7200	A-Frame Ladder with Roll Guard - Light Beige
	CPI7100X	7100X	Evolution A-Frame Ladder Fits 48" to 54" Pools Snap-lock treads for quick, easy assembly, Swing up outer section for security. Can be Padlocked (Lock included) Features Anti-Entrapment Barrier, 16" Tread Width. 300 LB Weight Limit
	CPI6000X	6000X	Heavy Duty In-Pool Ladder for decks 42" to 56" High. Includes barrier, Large 5" x 18" Treads, 22" High Handrails 300LB Weight Limit

Code	New Product Number	Old Product Number	Description
	CONFER plastics inc.	**Curve Steps**	
	CPICCXAG	CCX-AG	Above Ground Base Step - 4 Tread
	CPICCXIG	CCX-IG	Inground Base Step - 3 Tread
	CPICCXADD	CCX-ADD	Curve Add-On unit for both CCX-AG and CCX-IG - Warm Grey
	CPI8100X	8100X	**Ground-to-Step Entry Ladder** When combined with our Curve step it forms an economical entry/exit system. Outside treads swing up into an upright position for security. Padlock included. Note: Curve inpool step unit not included; must be purchased separately. Simple and easy assembly. Weight guideline: 300 lbs.
	CONFER plastics inc.	**Economy Entry System**	
	CPISTEP1X	STEP-1X	Economy In-Pool Entry System Warm Gray w/Beige Treads
	CPI8000X	80000X	Ground to Step Entry Ladder When combined with the Step-1X, it forms an economical Entry/Exit System for 48" to 54" Pools. Outside tread swings up into an upright position for security. 18" Wide, 22" high handrail. 300 Lb Weight Limit
	CPIPES1X	PES-1X	Single Pool Entry Step (Warm Gray Color) (Two units can be combined making a complete entry system inside and outside the pool, which requires the optional gate kit priced below).
	CPIPESGX	PES-G-X	Gate for Pool Entry System. (Warm Gray Color) A Self-Locking, Self-Latching Gate for when two PES-1 units are joined.

All items cataloged are normally stocked unless noted.

◆ Not Stocked ✻ While Supplies Last

Code	New Product Number	Old Product Number	Description
			Step Lighting
	LUM9010	INN9010	**Solar- Powered LED Light** Fits all Innovaplas, Lumi-O, and Access Resin Steps Can be retrofit to any step (1½" hole required)
✻	LUM9030	INN9030	**Stainless Steel Mood Light** • 50-watt halogen light, • Fits all step models • 25' Cord
✻	LUM9045W	INN9045	**High Output Crystal White LED Light** • Fits all step models • 25' Cord
			Ladders Designed to be Entrapment-Free, Meets PHTA standards, Fits 48" through 54" pools, 2 PVC handrails, 25" wide. Can handle up to 350 lbs. 1 Year Warranty
	LUMPG5005	INN5005PG	**BiLTMor Step - Pearl Grey** 2 PVC Handrails, 25" wide Small enough to UPS. Stair portion is 2 pieces. Easy assembly and low cost makes this step an excellent alternative to ladders! Designed to be entrapment-free. Includes support brackets for deck installation.
	LUMPG6003PG	INN6003PG	**Classic Ladder with Platform - Pearl Grey** Fits H_2O, Bilt Mor, Fiesta, and Opera
✻	LUMINNO 0005HRK	INN0005PG	**Handrails & Deck Attachment** Pearl Gray Color Makes H_2O a pool-to-deck ladder

All items cataloged are normally stocked unless noted.
◆ Not Stocked ✻ While Supplies Last

QUALITY POOL SUPPLY

Code	New Product Number	Old Product Number	Description
			Pool Fence
	OBP310500	OB310500	A-Kit 8 Section Base Kit
	OBP310501	OB310501	B-Kit 3 Section Add-On Kit
	OBP310502	OB310502	C-Kit 2 Section Add-On Kit
◆		OB310505	Gate - Insert into existing fence section.
			Replacement Parts for Ocean Blue Fence
	OBP310902	OB310902	Fence Channel 60"
	OBP310904	OB310904	Fence Picket 23½"
	OBP310905	OB310905	Post Holder 4½"
◆		OB310906	Post Cap
			Replacement Parts for Plastival Fencing
✻	PSV200916	200916	White Picket Tube ⅝" x 21 15/16"

Ocean BLUE WATER PRODUCTS

- UV Resistant PVC Resin
- Fits most brands and models of above ground swimming pools
- Provides an extra level of protection against unauthorized use of pool
- Easy do-it-yourself installation. Modular kits allow you to choose the exact amount for your pool

1. Determine the number of topseats on your pool you would like covered with fence. One section is required for each topseat.
2. Order 1 base kit which includes 8 sections and an easy do it yourself instructional video. Only 1 base kit can be used per pool. Use "add-on kits" for more sections.
3. 2 section and 3 section "add-on kits" are available to complete your requirements.

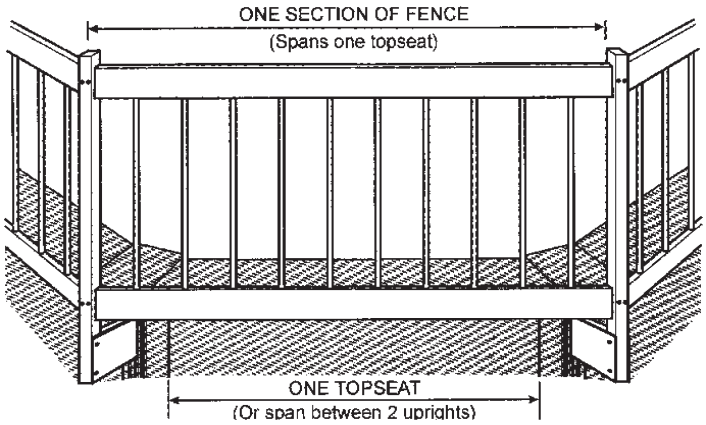

All items cataloged are normally stocked unless noted.

◆ Not Stocked ✻ While Supplies Last

Ladder Accessories

Horizon

Step & Ladder Pads

Prevents Holes In Pool Liners From Drop-In Steps & Ladders

Code	New Product Number	Old Product Number	Description
	HORHV9X30	HV-9X30	Universal Ladder Pad 9" x 30"
	HORHV4X5	HV-4X5	Walk-In Step Pad 4' x 5'
	HORHV30X38	HV-30x38	Drop-In Step Pad 30" x 38"

ULTIMATE MANUFACTURING COMPANY, INC.

F1000 & F2000 Ladder Parts

Code	New Product Number	Old Product Number	Description	LADDER
	UMCF103	F-103	Platform	F1000
	UMCF104	F-104	Adjustment Insert	F1000
	UMCF540	F-540	Extension Kit to 54"	F1000 & F2000
	UMCF106	F-106	Insert - Rail to Ladder	F2000
	UMCJ506	J-506	2" Flange	F2000
	UMCF3000	F3000	Ladder Conversion Kit Converts a F1000 from a Pool-to-Ground to a Pool-to-Deck ladder.	F1000

InnovaPlas The pool Step Company

Miscellaneous Step Parts

Code	New Product Number	Old Product Number	Description
	LUM1600003PG	160-003	Classic Ladder Platform
	LUM1600010PG	160-010	Classic Ladder Handrail
	LUMPG9020	160-007	Handrail for Biltmor
	LUM1600011PG	160-011	Cap for Biltmor Handrail
	LUM1600031	160-031	Step Cup for Majestic, Walkway, and Opera Steps.
	MPOE9098	E9098	Step Secure Sand Bag Elimination System uses magnets to hold step in pool. *Includes two of each item pictured.

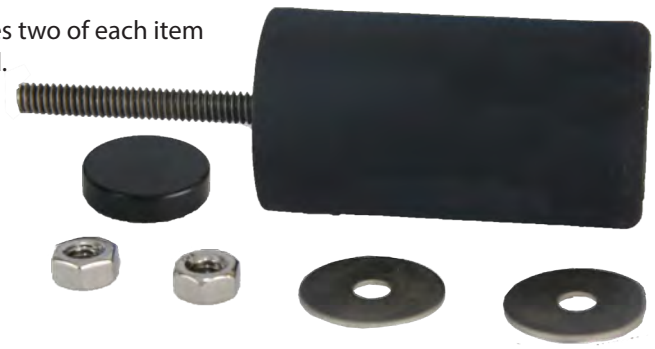

All items cataloged are normally stocked unless noted.
◆ Not Stocked ✻ While Supplies Last

QUALITY POOL SUPPLY

Code	New Product Number	Old Product Number	Description
		Above Ground Pool Systems	
RELIANT®		**RBTS-Mini Series Sand System**	
	BCIF412T10	F412T1003	12" Sand Filter with .35 HP Pump Cord, 6', Sand needed: 42 lbs.
HAYWARD®		**VL Series Sand System**	
	HPPVL40T32	VL40T32	13" Sand Filter with 30 GPM VL Series Pump 4-Position Valve, 1-1/4" and 1-1/2" hose adapters. Sand needed: 42 lbs.
STA-RITE		**Cristal-Flo™ II Sand System** • One-piece polyethylene tank - black • 6 position valve with E-Z unions on all ports • One year warranty	
	PENSRCF2019OE1160	SRCF19	19" Cristal-Flo II Sand Filter with 1.5 HP Dynamo 1-speed pump, 3' standard cord and 6' hose kit. (Pentair # SRCF2019DO1160) Sand needed: 150 lbs.
	PENSRCF2022OE1160	SRCF22	22" Cristal-Flo II Sand Filter with 1.5 HP Dynamo 1-speed pump, 3' standard cord and 6' hose kit. (Pentair # SRCF2022DO1160) Sand needed: 250 lbs.
PENTAIR		**Sand Dollar Sand System** • One-piece thermoplastic tank for exceptional strength • 6 function multiport valve for easy control of all filter functions • Large strainer basket with see-thru lid for easy inspection and cleaning • One year warranty	
	PENPNSD0040OE116	PNSD19	19" Sand Dollar 40 Filter with 1.5 HP 1-speed pump, 3' standard cord and 6' hose kit (PNSD0040DO1160) Sand Needed: 150 lbs.
	PENPNSD0060OE1160	PNSD22	22" Sand Dollar 60 Filter with 1.5 HP 1-speed pump, 3' standard cord and 6' hose kit (PNSD0060DO1160) Sand Needed: 250 lbs.
PENTAIR		**Clean and Clear Cartridge System** • One-piece thermoplastic chemical-resistant tank • Removable easy-to-clean filter cartridge • Easy spin-on unions for fast and economical plumbing hookups • One year warranty	
	PENPNCC0150OP116	PNCC015	Clean and Clear 150 Sq.Ft. Filter with 2 HP OptiFlo Pump, 3' standard cord and 6' hose kit (PNCC0150OP1160)

All items cataloged are normally stocked unless noted.

◆ Not Stocked ✻ While Supplies Last

GAME The Fun Solutions People

Sand Filter Parts

Models
GAM4510
GAM4511

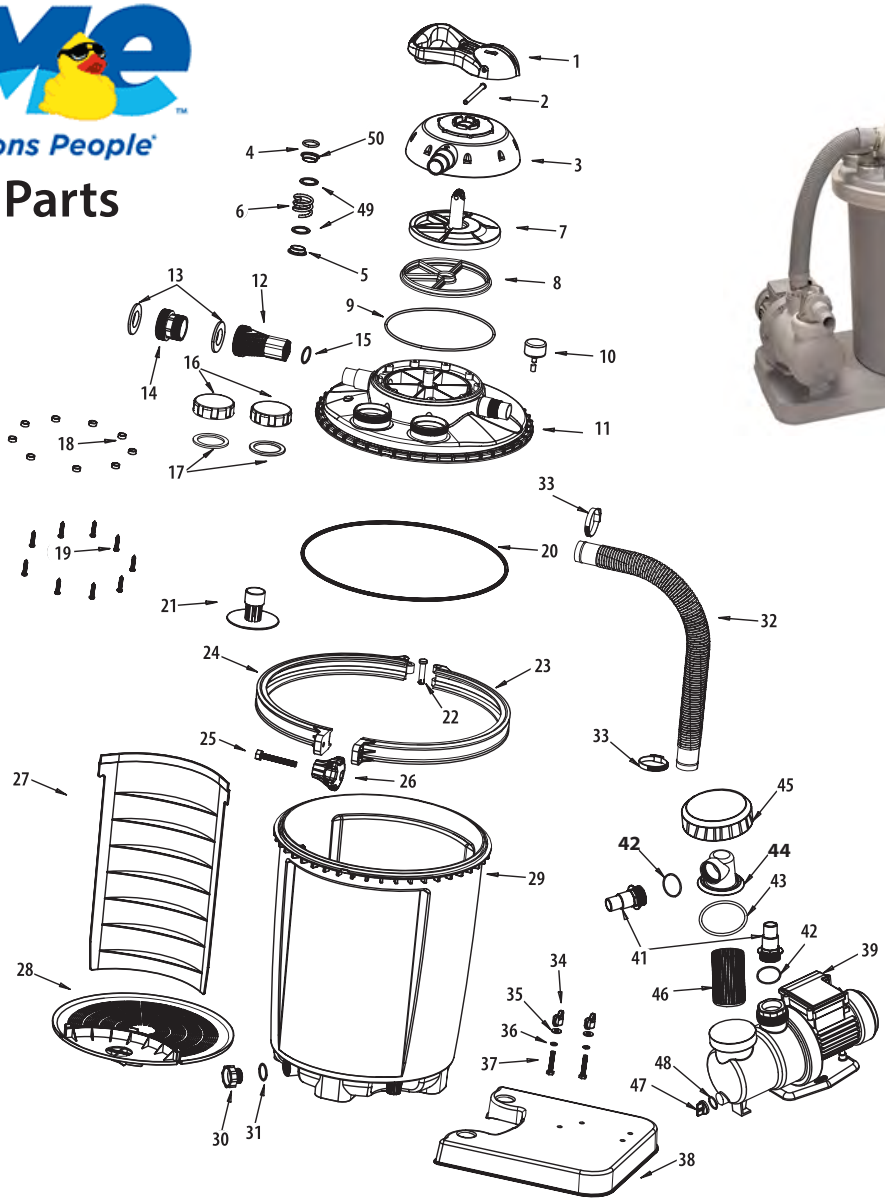

	GAM4K8000	GAM4K8000	1-2	Valve Handle & Pin Kit
	GAM4K8001	GAM4K8001	12-15	Intex 40mm Connector & Gasket Kit
	GAM4T2005	GAM4T2005	20	Tank O-ring for Both Systems
	GAM4P6001	GAM4P6001	32	Filter-to-Pump Hose for GAM4510
	GAM4P6002	GAM4P6002	32	Filter-to-Pump Hose for GAM4511
	GAM4P6013	GAM4P6013	41	Pump-to-Hose Connector 1¼" - 1½" for Both Systems
	GAM4P6018	GAM4P6018	46	Strainer Basket for Both Systems
	GAM4P6012	GAM4P6012		Transparent Hair & Lint Strainer Cover for Both Systems
✻	GAM4K8007	GAM4K8007		Tank Lid Assembly Kit

All items cataloged are normally stocked unless noted.
◆ Not Stocked ✻ While Supplies Last

QUALITY POOL SUPPLY

HAYWARD

VL Sand Filter Parts

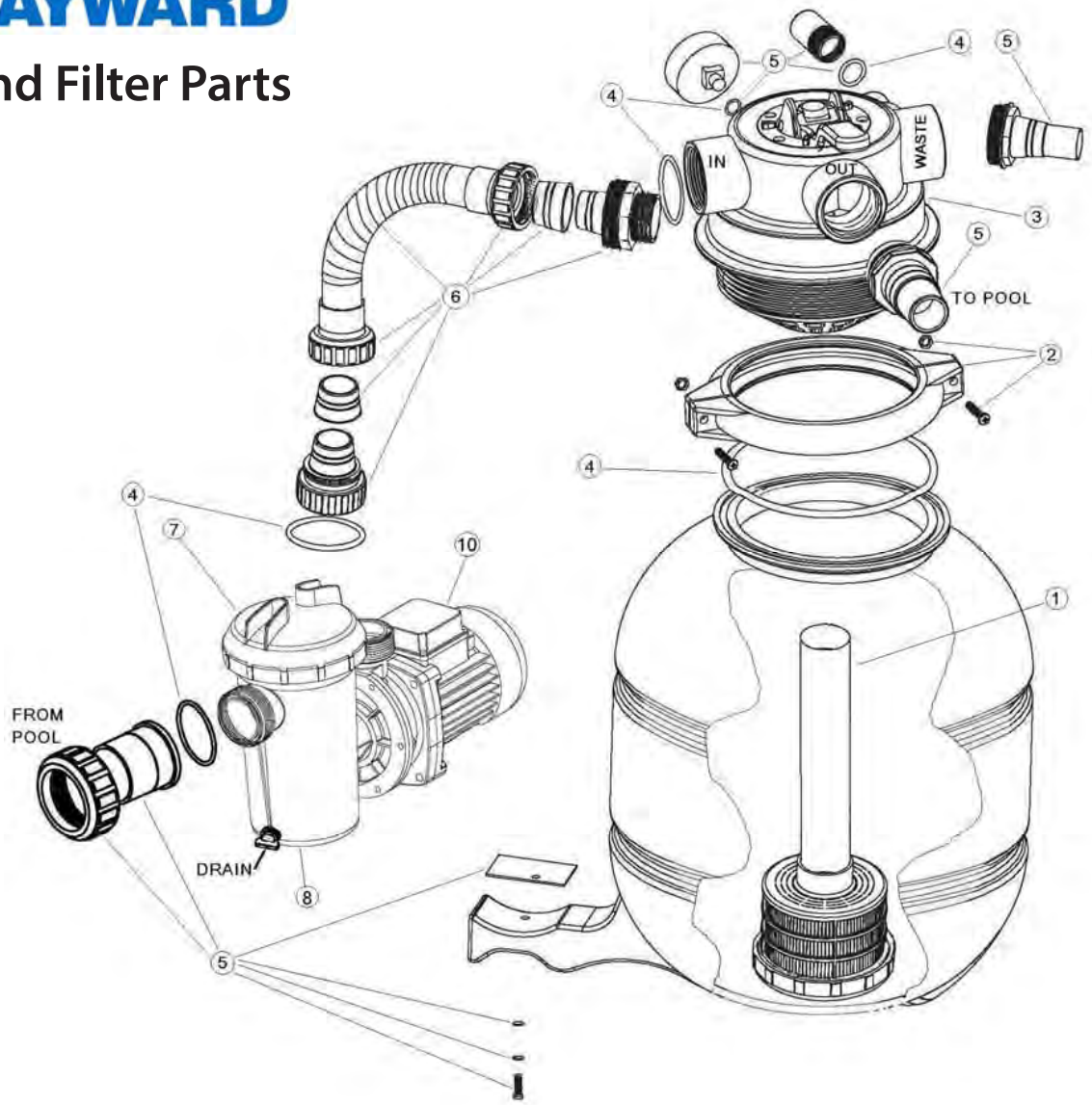

Code	New Product Number	Old Product Number		Description
	HPPVLX4001A	VLX4001A	1	Stand Pipe & Underdrain Assy
	HPPVLX4002A	VLX4002A	2	Clamp Hardware & Filter O-Ring
	HPPVLX4003A	VLX4003A	3	Multi-Port Valve
	HPPVLX4004A	VLX4004A	4	O-Ring Kit - All O-Rings on Strainer and Filter
	HPPVLX4005A	VLX4005A	5	Accessory Kit: Includes all hose adapters for pump and Valve, Pressure Gauge, Sight Glass, and Drain Plug.
	HPPVLX4006A	VLX4006A	6	Pump To Filter Hose - Including Adapters
	HPPVLX4007A	VLX4007A	7	Strainer Lid, Basket with Handle, Strainer O-Ring
	HPPVLX4007K	VLX4007K	8	Strainer Housing Kit - Includes Housing, Drain Plug and O-Ring and pump interlocking nut.
	HPPVLX4008	VLX4008	9	Pump Shaft Seal and Pump Body O-Ring
◆	HPPVLX4009	VLX4009	10	Pump W/O Strainer

All items cataloged are normally stocked unless noted.

◆ Not Stocked ✻ While Supplies Last

INDEX

Automatic Pool Covers....54
Automatic Cover Parts....55
Coping....40
Deck Drain Systems....43
Deck Jets....45
Fiberglass Pools....34
Latham Steps....49
Liners....36
Liner Accessories....46
Liner Track....44
Pool Kits....35
Recessed Step Parts....52
Saratoga Steps....50
Steel Pool Walls....35
Stegmeier Cantilever Coping Forms....40
Steps....49
Ultimate Pools....53
Vinyl Liner Order Form....58

Pool image courtesy of OUTDOOR FX in Plain City, Ohio

Fiberglass Pools

Less Maintenance • 25 Year Warranty

Gulf Shore

St Lucia

Freeport

10 Fiberglass Pools Now Available

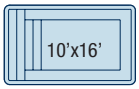

Milan
Depth: 4'

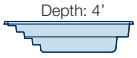

Non-Diving Pool. Use of Diving Equipment is Prohibited.

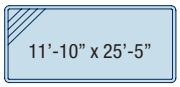

Delray
Depth: 4'-6"

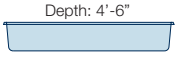

Non-Diving Pool. Use of Diving Equipment is Prohibited.

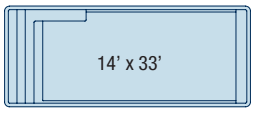

Claremont
Depth: 3'-6" to 5'-4"

Non-Diving Pool. Use of Diving Equipment is Prohibited.

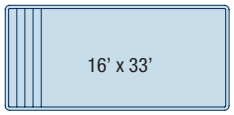

Lake Shore
Depth: 3'-7" to 5'-5"

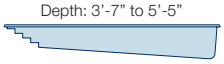

Non-Diving Pool. Use of Diving Equipment is Prohibited.

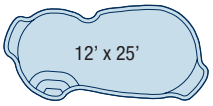

Freeport
Depth: 3'-7" to 5'-5"

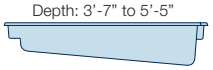

Non-Diving Pool. Use of Diving Equipment is Prohibited.

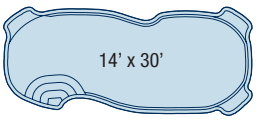

Rockport
Depth: 3'-7" to 5'-11"

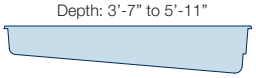

Non-Diving Pool. Use of Diving Equipment is Prohibited.

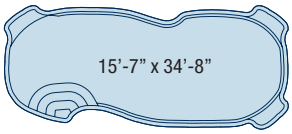

Gulf Shore
Depth: 3'-7" to 5'-10"

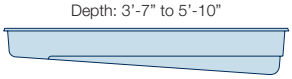

Non-Diving Pool. Use of Diving Equipment is Prohibited.

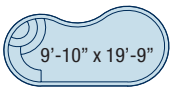

Jamaica
Depth: 3'-2" to 5'

Non-Diving Pool. Use of Diving Equipment is Prohibited.

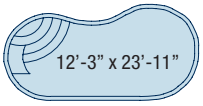

St. Lucia
Depth: 3'-6" to 5'

Non-Diving Pool. Use of Diving Equipment is Prohibited.

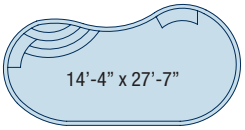

Valencia
Depth: 3'-7" to 5'-10"

Non-Diving Pool. Use of Diving Equipment is Prohibited.

Available in **Sapphire Blue G2 Finish, Shale Gray G2 Finish,** and also available in **Whisper White Standard Gelcoat**

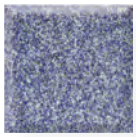
Sapphire Blue G2

Shale Gray G2

Whisper White

latham
The Pool Company

IDEAL POOLS

New Inground Construction & Remodeling

Whether you build brand new inground pools or remodel them, Quality Pool Supply is the perfect partner to help you maximize profit and homeowner satisfaction on each and every job you do. No other supplier has the in-house knowledge and capability to work closely with you on individual jobs, providing you with quotes that are timely, competitive, and tailored to what you and your homeowner want in a pool. We work hard to help you win sales and grow your earnings. It is our firm belief that we can offer you the best products, prices, and service. Team Quality is ready to be a valued asset in your business arsenal.

What do we have to offer?

- Many different brands of stocked steel & non-corrosive wall pools (including 48" steel)
- Numerous liner options
- Modular plastic and fiberglass steps of all shapes & sizes
- Custom design assistance with vinyl-over steps and custom shaped pools
- Traditional aluminum coping, liner track, poured deck forms
- Auto covers for all different types of applications
- Assistance with customization, including color options, lighting, water features, and more
- Access to rebate and reward programs
- An unparalleled accurate and reliable delivery service
- And much, much more!

Give your local sales representative a call to find out more about how you can take advantage of our 100+ years of combined experience with inground pool sales and installation/remodeling!

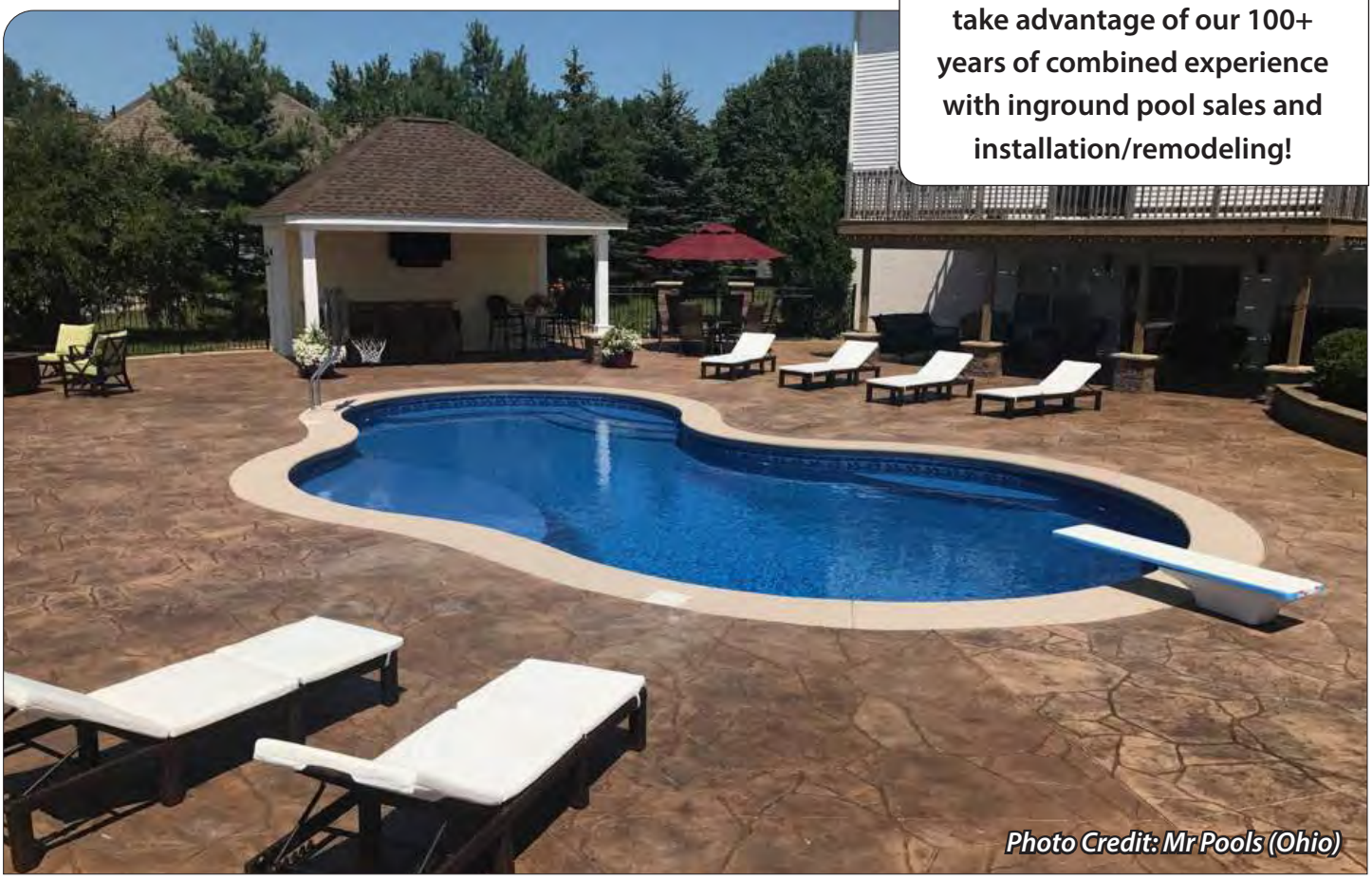

Photo Credit: Mr Pools (Ohio)

Code	New Product Number	Old Product Number	Description

Vinyl Liner Safety Notice —
You are required to inform (and supply if necessary) the consumer about the required safety stickers to be attached to the deck and coping. Sometimes these are supplied by the manufacturer and sometimes not. If you have any questions about what is required or need help obtaining safety stickers, please contact the technical support person at your local branch.

Inground Liners

Standard liners are 20 mil with a tile border, print bottom, and a hopper style bottom.

			14' x 28' Rectangle
			16' x 32' Rectangle
			18' x 36' Rectangle
			20' x 40' Rectangle

Inground Liners

Standard liners are 20 mil with a tile border, print bottom, and a hopper style bottom.

			14’ x 28’
			16’ x 32’
			18’ x 36’
			20’ x 40’

Inground Liners

Standard liners are 20 mil with a tile border, print bottom, and a hopper style bottom.

			14' x 28' Rectangle
			16' x 32' Rectangle
			18' x 36' Rectangle
			20' x 40' Rectangle

Optional features including, but not limited to: 28 to 30 mil (depending on manufacturer), freeform pools, vinyl over steps, safety ledges, wall heights over 42", and textured material may incur additional charges. Please contact Quality Pool Supply for a quote.

All items cataloged are normally stocked unless noted.
Not Stocked ✻ While Supplies Last

All liner prices are subject to change.
Liner order forms are located at the back of this section.

GLI Pool Products

FEATURING ColorMagic™ Swimming Pool Fixtures

DS™

Patterns available in 20 or 28 Mil.

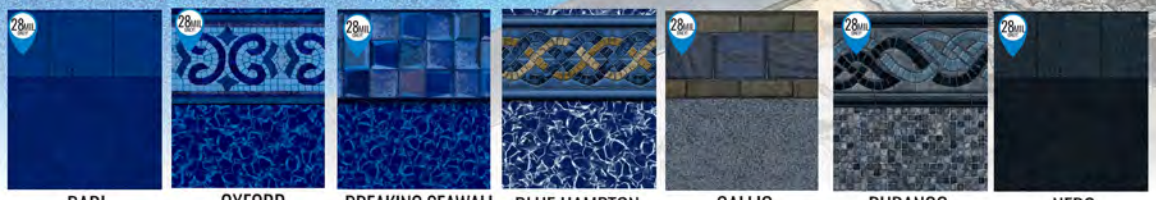

BARI with Royal Amber | OXFORD with Aquarius HD | BREAKING SEAWALL with Aquarius HD | BLUE HAMPTON with Aquarius | GALLIO with Gray Bonair | DURANGO with Mosaic Dark Gray | NERO with Eclipse Amber

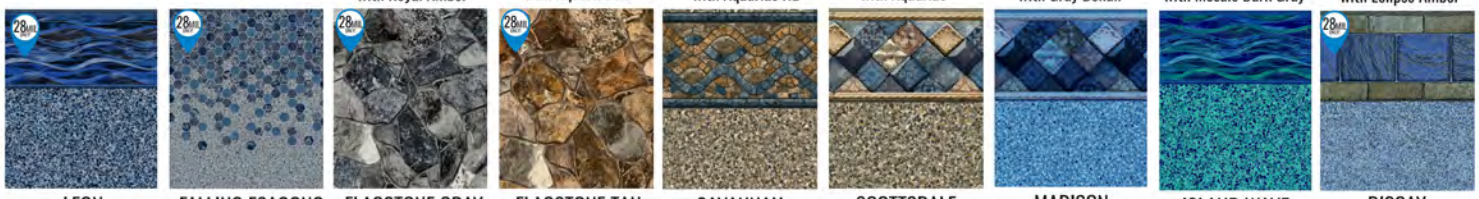

LEON with Slate | FALLING ESAGONO with Gray Crystal | FLAGSTONE GRAY | FLAGSTONE TAN | SAVANNAH with Sandstone Tan | SCOTTSDALE with Sandstone Tan | MADISON with Blue Crystal | ISLAND WAVE with Terrazo Caribbean | BISCAY with Blue Bonair

MOUNTAIN MOSAIC | MESA with Gunite Light Blue | MIDNIGHT OCEAN with Cobblestone | MONTERREY with Cobblestone | WHITEHAVEN with Crystal Quartz | SANTA BARBARA with Gunite Light Blue

Sure-Step™

All GLI Inground Liners with vinyl covered stairs and/or features are made with Sure-Step textured material upgrade that properly matches the floor material.

Shimmer Stone

FOR DESTINATION SERIES

ESAGONO | IVY INDIGO with Terrazo Ice | PEARLSTONE | OBSIDIAN | BLUE SLATE with FULL TEXTURE ONLY!

SS™ Signature Series

Patterns available in 28/20 Mil.

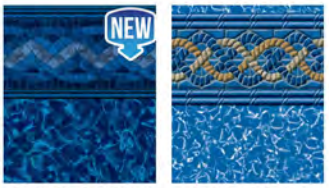

CARNEGIE INDIGO with Indigo Arctic HD | SOUTH BEACH with Aurora

SP™ Signature Plus

Patterns available in 28/28 Mil.

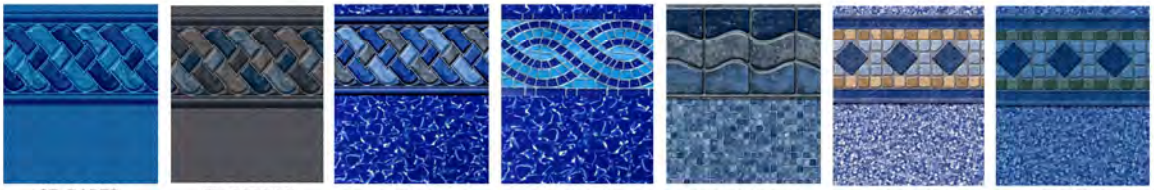

ST. BARTS with Blue Opal | ST. GEORGE with Gray Opal | CAYMAN with Mystic Light Blue | MODESTO with Mystic Light Blue | OCEAN BEACH with Mosaic Light Blue | LAGUNA with White Pacific | MALIBU with Polynesian

FLOORTEX SERIES

FULL FLOOR TEXTURED INGROUND LINERS

MOUNT BLEU | MOUNT GRIS

G-FUSION™ Bonding Technology

All GLI Inground Liners are created using G-Fusion Bonding Technology. This patent pending process is engineered to create a stronger, less visible seam for our custom-made vinyl liners.

DESIGN A COMBINATION THAT'S UNIQUELY YOURS!

Esagono
28 Mil available with Sure-Step®

Pearlstone
28 Mil available with Sure-Step®

Obsidian
28 Mil available with Sure-Step®

Blue Slate
28 Mil standard with Sure-Step®

Flagstone Gray
28 Mil available with Sure-Step®

Flagstone Tan
28 Mil available with Sure-Step®

NATURAL STONE FINISHES:

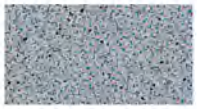

GRAY CRYSTAL

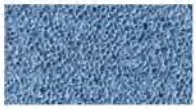

GUNITE LIGHT BLUE

GRAY BONAIR

BLUE BONAIR

SANDSTONE TAN

ROYAL AMBER

ECLIPSE AMBER

The TrueStone Collection allows you to incorporate high-end style to your swimming pool designs. These designs, in the past, were reserved for those builders who had access to expensive Stonemasons and natural limestone/sandstone materials. Now, you to can, build something unique and capativating, that will surely excite your customers. Pair a TrueStone Collection pattern with a Natural Stone Finish and you have a unique combination.

www.glipoolproducts.com • 800-448-2343

Code	New Product Number	Old Product Number	Description	
latham			**Inground Liners** Standard liners are 20 mil with a tile border, print bottom, and a hopper style bottom.	
			14' x 28'	"Super Max" Patterns (27 MIL at a 20 MIL price)
			16' x 32'	"Super Max" Patterns (27 MIL at a 20 MIL price)
			18' x 36'	"Super Max" Patterns (27 MIL at a 20 MIL price)
			20' x 40'	"Super Max" Patterns (27 MIL at a 20 MIL price)
MERLIN INDUSTRIES, INC.			**Inground Liners** Standard liners are 20 mil, with a tile border, print bottom, and a hopper style bottom. 20 and 27 mil liners have a 20 year pro-rated warranty. Aqua-Max liners have a 25 year pro-rated warranty.	
			14' x 28'	Rectangle
			16' x 32'	Rectangle
			18' x 36'	Rectangle
			20' x 40'	Rectangle
TARA Liners			**Inground Liners** Standard liners are 20 mil, with a tile border, print bottom, and a hopper style bottom. 20 year warranty is pro-rated after the 5th year.	
			14' x 28'	Rectangle
			16' x 32'	Rectangle
			18' x 36'	Rectangle
			20' x 40'	Rectangle

Optional features including, but not limited to; 28/30 mil, freeform pools, vinyl over steps, safety ledges, wall heights over 42", and textured material may incur additional charges. Please contact Quality Pool Supply for a quote.

All liner prices are subject to change.
Liner order forms are located at the back of this section.

All items cataloged are normally stocked unless noted.
Not Stocked While Supplies Last

QUALITY POOL SUPPLY

STEGMEIER LLC

Stegmeier Cantilever Coping Forms

Code	New Product Number	Old Product Number	Description
	STM7FS112	7FS112	**Fiber-Optic Capstone** - For gunite pools with Fiberstars™ perimeter lighting. 8' per length, 112' per carton. Complete with fiber optic receiver and tie wire side kit.
	STM9CF112	9CF112	**Capstone Form** - Cantilever forming for fiberglass/ concrete pools. Flair edge design. 8' per length, 112' per carton. Includes: Forms, tile strip, and tie wire side kit.
	STM1CF112	1CF112	**Regular Form** - Cantilever forming for fiberglass/ concrete pools. Standard Edge Design. 8' per length 112' per carton includes: Forms, tile strip, and tie wire side kit.
	STM7CF999	7CF999	**Extender Strip** - For 1¾" Cantilevered edge extension. 8' per length, 30 pieces per carton.
	STM8CF1000	8CF1000	**Clip-Lock Capstone Liner Form** - Cantilever forming for inground vinyl liner pools. Flair edge design. 8' per length, 112' per carton. Includes: forms, liner track & 100 self taping screws.
	STM4CF112	4CF112	Auto Pool Cover, 104' per carton with 1¾" extender strips
	STM4PCEL	4PCEL	Pool Cover form Encapsulated - L 8' Per Length 104' per carton
	STMCFA001	CFA001	**Tie Wire Side Kit** - Includes 100 tie wires, 100 concrete nails, and 1 roll bending tape
	STMREG6	REG6	Form Tool for Regular Form
	STMCAP6	CAP6	Form Tool for Capstone Form
	STMFBGLW	FBGL-W	**Plumb Strip** 8' Length - White. PVC corner strip to square top edge of fiberglass pool.
	STMFBGLWFLEX	FBGL-W-FLEX	**Flexible Plumb Strip** 8' Length - White.
CALL	STMRPSWFLEX	RPS-W-FLEX	Removable Plumb Strip 8' Length, 112' per carton
	STM14RC6I	14RC6-i	**Regular Form** 6" Radius Inside Corner each
	STM14RC6O	14RC6-o	**Regular Form** 6" Radius Outside Corner each
	STM94RC6I	94RC6-i	**Capstone Form** 6" Radius Inside Corner each. Standard corner (90 degrees of water, 270 degrees of deck)
	STM94RC6O	94RC6-o	**Capstone Form** 6" Radius Outside Corner each Reverse corner (270 degrees of water, 90 degrees of deck)
	STM16CF112	16CF112	**Frontier Step Ledger** - For use on gunite pools as a nail-on form ledger. 8' per length, 112' per case. Case includes (100) 2" concrete nails, (100) 2½" concrete nails, and (100) tee nuts & tape.
	STM8CF1000FT	8CF2000FT	Clip-Loc Capstone w/insert flex track (Includes 8CF955 and 8CF1000NT - aluminum flex track and forms)
	STM8CF2000FT	8CF1000DFT	Clip Loc Capstone w/insert flex track. Includes 8CF975 and 8CF1000NT – dual aluminum flex track and forms

Forms can be bent up to approx. 1' radius without buying a corner.

All items cataloged are normally stocked unless noted.

Not Stocked ✻ While Supplies Last

STEGMEIER LLC

www.stegmeier.com

DECORATIVE CONCRETE EDGE FORMING SYSTEMS

DOWNLOAD THE STEGMEIER LLC APP

Download on the App Store

GET IT ON Google Play

STEGMEIER LLC
www.stegmeier.com

1111 W. HARRIS ROAD
ARLINGTON, TX 76001
Phone: (800) 382-5430

OTHER WAREHOUSE LOCATIONS:
APOPKA, FL • ATLANTA, GA • HENDERSON, NV

Code	New Product Number	Old Product Number	Description
STEGMEIER LLC		**Super Drain** • Wide Funnel Top • Large Capacity • Fits 1 1/2" Schedule 40 PVC • Non-directional Fittings • Built-in Nailing Guide • Case includes 8 couplers and 4 end clips	
	STMSRW	SRW	Super Drain White 10' Length with protective tape
	STMSRG	SRG	Super Drain Gray 10' Length with protective tape
	STMSRT	SRT	Super Drain Tan 10' Length with protective tape
	*Tan and Gray accessories available by special order only. Allow 3 days for arrival		
	STMSR9W	SR9W	90° Angle - White
	STMSR4W	SR4W	45° Angle - White
	STMSRDAW	SRDAW	Down Adaptor - White
	STMSRSAW	SRSAW	Side Adaptor - White
	STMSRTW	SRTW	Tee - White
	STMSRXW	SRXW	Cross - White
	STMSRDCOW	SRDCOW	Clean-out - White
	STMSRDEP	SRDEP	End Plug - White
	STMSR9G	SR9G	90° Angle - Gray
	STMSR4G	SR4G	45° Angle - Gray
	STMSRDAG	SRDAG	Down Adaptor - Gray
	STMSRSAG	SRSAG	Side Adaptor - Gray
STEGMEIER LLC		**Frontier Deck Drain** Frontier deck drain is a removable top drain that features a double wall base and snap-in PVC top	
	STMSDDW	SDDW	10' Length with removable top
		8/Case	Case includes 8 top caps, 8 couplers and 4 end adapters
	STMSDD90	SDD90	90° Angle - White
	STMSDDDA	SDD-DA	Down Adapter

90° Angle

Side Adaptor

Tee

Cross

Clean-Out

All items cataloged are normally stocked unless noted.
Not Stocked While Supplies Last

Code	New Product Number	Old Product Number	Description
		Aluminum Liner Track White Glossy Finish	
		Vertical Mount 0.5" X 1" High	
	CINCPVM1C2040	VM1	8' Length (15/CS) - Easy to freeform bend
	CINCPVM1CS	VM1CS	6"R Corner - 4/CS
		Horizontal Mount 0.37" x 1.25" Mounting Surface Width	
	CSYHZWS08X25	HZW-S08X25	8' Length - 25/CS
	CSYHZWN08X25	HZW-N08X25	8' Length - 25/CS Notched/Field-Bendable Down TO 6"R
	CSYHZW2RAD4	HZW-2RAD4	2'R Corner - 4/CS 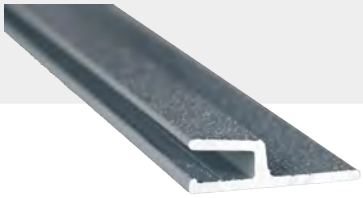
	CSYHZW2REV1	HZW-2REV1	2'RR Corner
	CSYHZW6RAD4	HZW-6RAD4	6"R Corner - 4/CS
	CIN480152	TEKS	#12 x 1" TEKS Screws (Bag of 100)
		Plastic Liner Track	
	CSYQP531	QP-531	Quaker Top-Mount Liner Track - 8' length 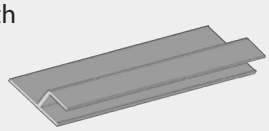

All items cataloged are normally stocked unless noted.

Not Stocked ✻ While Supplies Last

Code	New Product Number	Old Product Number	Description
ZODIAC® a better life		**Deck Jets**	
	JNDFFMJ	FFMJ	MiniJet - for pool deck or gunite wall - Easy to install - Jet adjustable to 45-degree angle - Low water flow requirement - Easy access to jet for adjusting arc of water up to 13 feet - Jet is removable and replaceable
	JNDFFMJVL	FFMJ-VL	MiniJet - for vinyl in-wall installation (not stocked)
Jandy® Pro Series		**Deck Jets**	
	JNDJDJ2004	JDJ2004	Deck Jets (Set of 4) - Arcs of water from a deck or patio - Adjustable up to 360° - 2 ½" in diameter and sold in a set of four - A pressure testing plug and polished bronze deck coverplates are included
PENTAIR		**Deck Jets**	
	PEN580000	580000	Deck Jet - for pool deck - 5 Interchangeable eyeballs - Streams reach eight feet - Spray pattern adjustable
	PEN580003	580003	Magic Stream Deck Jet II - Set of 4 - Adjustable height up to 6 feet and 360 degrees - Easy to adjust nozzles - Low water flow requirements

BRICK AND MORTAR NO INTERNET SALES

All items cataloged are normally stocked unless noted.
Not Stocked While Supplies Last

QUALITY POOL SUPPLY

Code	New Product Number	Old Product Number	Description
			Liner Accessories
	GLAWFSG1253	WF	**Wall Foam** - 3 lb. Density ⅛" x 42" Wide x 125' Long
	GLAWFSG12525	WFSG12525	**Wall Foam** - 2 lb. Density ¼" x 42" Wide x 125' Long *Only Stocked in Ohio Branches
	GLAFB24	PT	**Foam Tak*** (17 oz.) Spray adhesive for wall foam. (Less 10% for Case of 12) *4 to 6 cans per roll of wall foam
	FVIRNL4/32120	32091498	**Lok-N-Roll 200 ft 4/32 Cord & Tool**
	FVIRNL5/32120	32091499	**Lok-N-Roll 100 ft 5/32 Cord & Tool**
	CSYQP1562	QP-1562	**Liner Lock, 120' Roll - White** For locking vinyl liner bead into coping. Sold by the roll only. Quaker Plastics
	CSYQP1564	QP-1564	**Liner Lock, 120' Roll - Blue** For locking vinyl liner bead into coping. Sold by the roll only. Quaker Plastics
	CSYQP1568	QP-1568	**Liner Lock, 120' Roll - Grey** For locking vinyl liner bead into coping. Sold by the roll only. Quaker Plastics
	TAPDUCT	DT	**Duct Tape**, 2" x 60 Yards A special tape that contains no petroleum compounds that can bleed through vinyl liners. (Less 10% for case of 24)
			Rebar
	HSARB3X18	REBAR	⅜" × 18" Rebar Sold in Bundles of 50 Only

All items cataloged are normally stocked unless noted.

Not Stocked ✻ While Supplies Last

Latham's Enhanced Design Finder

With an enhanced interface and improved search tool, browse through a robust offering of shapes, sizes and features tailored to fit any backyard lifestyle.

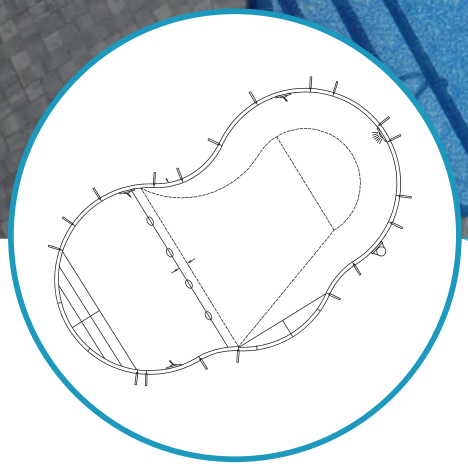

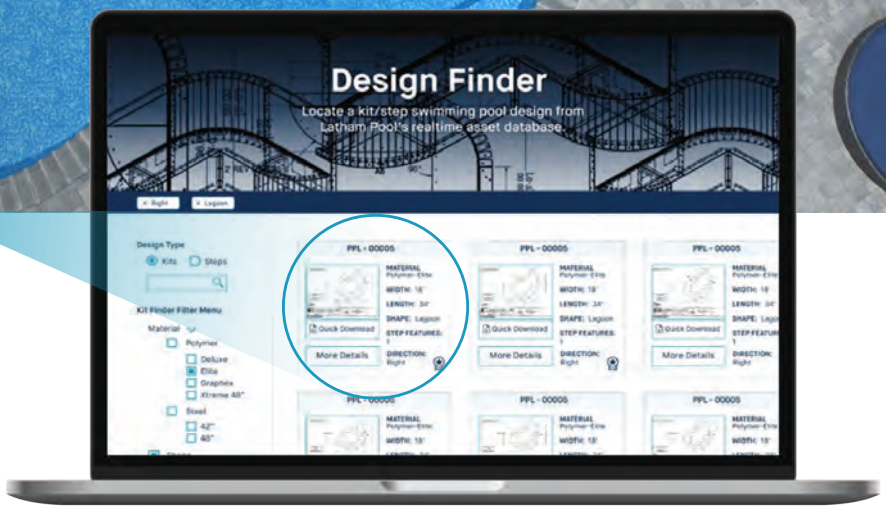

Find step or kit by drawing numbers quickly

Select step or kit by size – exact size or set range

Accessible on desktop or mobile devices

Latham's **new and improved Design Finder** delivers enhanced speed and performance and offers a quick, convenient alternative to conventional drawing requests. Save time and browse quality, pre-designed options and view multiple drawings with ease.

- 20,000+ pool and step options
- Complete steel and polymer systems
- Full list of best-sellers, geometrics and freeforms

Visit lathampool.com/designfinder to get started

latham

lathampool.com • 800-833-3800

© Latham Pool Products, Inc. 2022. All rights reserved.

3 Easy Ways to Get Paid

1. Auto submission*
2. Download and open the Latham EZ Measure App, use the barcode reader to scan your Liners and Safety Covers
3. Enter your product serial number through Latham Link under "My Account" by selecting "Latham Loyalty" and "Aim for 5"

**Indirect Dealers: When your distributor is placing your order in Latham Link, have them select your dealer name in the drop-down menu. If they do not see your account, contact customer service to have one created. If your distributor is not using Latham Link, simply have them reference your information when placing their order.*

Program Details

Eligibility: All qualifying Latham Inground Liner and Solid/Mesh Safety Cover customers are eligible with no sign up necessary. Some restrictions may apply, contact your Latham Sales representative regarding eligibility.

Submission: Qualifying liners and covers must be claimed within 2 years of manufacture date, and are tallied on a rolling basis.

Redemption: Dealers must be in good standing and redeem all gift cards through the Aim for 5 redemption site. Earnings do not expire and can be used on a variety of physical and e-gift card options.

Status: Dealer Aim for 5 status and serial number history is available through the loyalty section of Latham Link.

Questions?
Contact us at: 800-833-3800 or via email at LPPAimfor5@lathampool.com

Note the redemption site is hosted by a third party vendor, therefore the redemption site and Latham Link have separate login/password information.

Certain Restrictions Apply: Requires valid Serial Number, no duplicates. Cannot be combined with any other Latham liner/cover rebate program or deals. Not valid for: Try me programs, warranty claims and remakes, above ground liners, Signature and other discount liners, or auto cover systems (including replacement covers).

latham

www.lathampool.com • 800-833-3800
787 Watervliet Shaker Road, Latham, NY 12110, USA

© Latham Pool Products, Inc. 2022. All rights reserved.

Inground Steps

Stocked Steps and Locations	Akron, OH	Byron Center, MI	Clio, MI	Dublin, OH	Perrysburg, OH	Waterford, MI
THERMOPLASTIC						
8' Straight						
8' Straight Cantilever						
8' Curved						
8' Curved Cantilever						
6' Straight						
In-Wall Ladder						
In-Wall Ladder Blue						
In-Wall Ladder Gray						
ACRYLIC/FIBERGLASS						
8' Straight						
8' Straight Cantilever						
Corner Step						
In-Wall Ladder						
In-Wall Ladder Blue						
In-Wall Ladder Gray						
STEEL (NEW CONSTRUCTION)*						
16' Open-Top Full Width 3-Tread Step with Back Walls (90°/6"R)						
18' Open-Top Full Width 3-Tread Step with Back Walls (90°/6"R)						
20' Open-Top Full Width 3-Tread Step with Back Walls (90°/6"R)						

*Requires liner for V.O.S. application; liner sold separately

Your branch is likely to stock more steps than those listed here. If you need a step located in another branch, please allow time for us to transfer it to your branch.

Quality Pool Supply offers a wide variety of special order steps. We have included links to the most up-to-date manufacturers' brochures on the pages that follow.

Please call for other steel step configurations.

4' Contour

Vinyl Over Steel

Blue 90º Corner

8' Roman

8' Sit-Step

11' Roman

2' Ladder

2' Radius Corner

All items cataloged are normally stocked unless noted.

Not Stocked While Supplies Last

QUALITY POOL SUPPLY

White Thermoplastic

See Page 49 For Our Stocking Policy

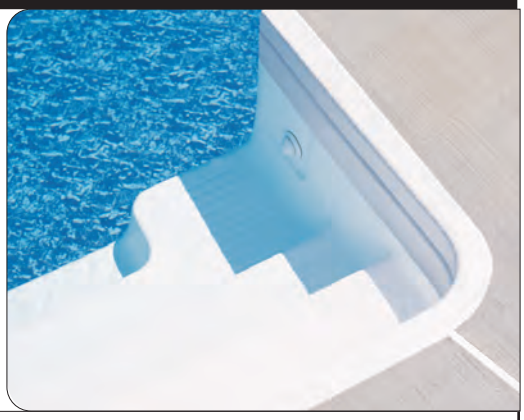

Code	New Product Number	Old Product Number	Description
CALL	IMP07418SNR	07418SNR	8' Straight 4-tread Step-N-Rest, Trimline
CALL	IMP07418SNRC	07418SNRC	8' Straight 4-tread Step-N-Rest, Cantilever
CALL	IMP07416SNR	07416SNR	6' Straight 4-tread Step-N-Rest, Trimline
CALL	IMP07416SNRC	07416SNRC	6' Straight 4-tread Step-N-Rest, Cantilever
CALL	IMP07412L	07412L	2' In-Wall 3-tread Ladder, Cantilever
CALL	IMP07418RSNR	07418RSNR	8' x 8'6"R 4-tread Step-N-Rest, Trimline
CALL	IMP07418RSNRC	07418RSNRC	8' x 8'6"R 4-tread Step-N-Rest, Cantilever
CALL	IMP07418SNRC48	07418SNRC48	8' Straight 4-tread Step-N-Rest, Cantilever (48" Step)

6' Step-N-Rest
07416SNR

Actual Brochure Pages

Visit https://www.qualitypool.com/pdf/saratogasteps.pdf to view the most up-to-date Saratoga brochure in full color, where you can see all of Saratoga's step configurations, color options, faceplate/gasket system, and bracing. You can also view selling points and warranty information.

All items cataloged are normally stocked unless noted.

Not Stocked ✻ While Supplies Last

Code	New Product Number	Old Product Number	Description
			latham Thermoplastic *See Page 49 For Our Stocking Policy*
CALL	LAHST8024B	ST8024B	8' Straight 4-tread Sit 'N Step, Standard, White
CALL	LAHST8025B	ST8025B	8' Straight 4-tread Sit 'N Step, Cantilever, White
CALL	LAHST2002	ST2002	2' In-Wall 3-tread Ladder, Cantilever, White
CALL	LAHST2002BG1	ST2002BG1	2' In-Wall 3-tread Ladder, Cantilever, Blue Granite
CALL	LAHST2002GG1	ST2002GG1	2' In-Wall 3-tread Ladder, Cantilever, Gray Granite

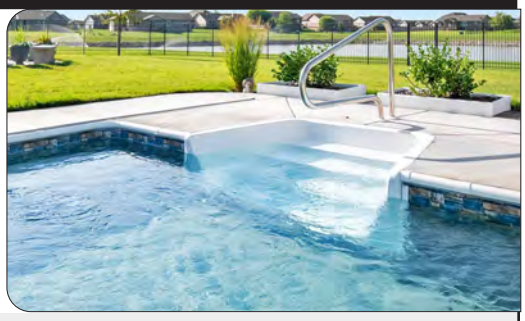

8' Sit 'N Step
ST8024B

			latham Acrylic/Fiberglass
CALL	LAHSTP8LSCDP	STP8LSCDP	8' Straight 4-tread Leisure Step, Cantilever, White
CALL	LAHSTP90CSCDP	STP90CSCDP	6' x 6' 4-tread Corner Step, Cantilever, White
CALL	LAHSTP2L	STP2L	2' 3-tread In-Wall Ladder, Cantilever, White
CALL	LAHSTP2LBG1	STP2LBG1	2' 3-tread In-Wall Ladder, Cantilever, Blue Granite
CALL	LAHSTP2LGG1	STP2LGG1	2' 3-tread In-Wall Ladder, Cantilever, Gray Granite

Actual Brochure Pages

Visit https://www.qualitypool.com/pdf/latham-steps.pdf to view the most up-to-date Latham step brochures in full color, where you can see all of Latham's step configurations, color options, faceplate/gasket system, and bracing. You can also view selling points and warranty information.

All items cataloged are normally stocked unless noted.
Not Stocked While Supplies Last

QUALITY POOL SUPPLY

Code	New Product Number	Old Product Number	Description
		Recessed Steps (for concrete pools only)	
CALL	PEN82400700	82400700	Pentair, ABS Recessed Steps Set of three
CALL	SSR622094001	62-209-4001	SR Smith Recessed Step - White (Individual Step)
		Vinyl-Over Step Parts	
CALL	LAHSSCSPRODS81	SSC-SSPRODS8-1	8' X ⅜" Fiberglass Stair Rod (Universal)
CALL	IMP149254B	149254B	Step Rod Clip (Bag of 12)
		Recessed Step Parts	
Other individual parts such as caps, straps, gasket material, color items, etc. are available by special order.			
	LAHSTEP01901	STEP01901	1" Step Screw
	LAHSTEP01902	STEP01902	1" Step Screw - Oversize (larger diameter)
	LAHPH395	PH395	Pack of 47 TORX head step screws with bit
	GTISWIMCRAFT1	SWIMCRAFT1	Gasket material for steps (50' roll)
	CSYQG662318	QG-6623-18	18 ft. Trim Cover & 2 Corner Pieces (Quaker)
		Faceplates/Gasket Kits	
	IMPSAR00468W	SAR00468W	**Saratoga White Universal Co-Extruded Faceplate & Gasket Kit, Complete** Works on Saratoga steps, as well as most other brands. 1-3/16" Width. For steps up to 8' wide. Includes: (2) 3' Faceplate/Gasket & Coverstrip, (1) 8' Faceplate/Gasket & Coverstrip, (80) Torx-head Screws, and (4) Faceplate End Caps. ***Not pre-drilled.***
	LAHPH3001	PH3001	**Latham White Universal Faceplate & Gasket Kit, Complete** Works on Latham thermoplastic steps. 1-⅛" Width. For steps up to 8' wide. Includes: (2) 36¼" Faceplate/Gasket & Coverstrip, (1) 116.5" Faceplate/Gasket & Coverstrip, (66) Torx-head Screws, and (4) Faceplate End Caps. ***Pre-drilled.***
	LAHFPKIT8WN	FP-KIT-8-WN	**Latham White Universal Faceplate & Gasket Kit, Complete** Works on Latham acrylic/fiberglass steps, as well as most other brands. 1-½" Width. For steps up to 8' wide. ***Not pre-drilled.***
CALL	CSYPK0084TS	PK-0084TS	**Quaker White Universal Faceplate & Gasket Kit, Complete** Works on Quaker 8' thermoplastic steps. ***Pre-drilled.***
		Step Renew Kits	
NEW	OPA920	920	**Step Renew Kit White -** Includes Tools, Cleaner, and Coating to resurface plastic and fiberglass vinyl liner pool steps (up to 8 ft wide)
CALL	OPA921	921	**Step Renew Kit Blue -** Includes Tools, Cleaner, and Coating to resurface plastic and fiberglass vinyl liner pool steps (up to 8 ft wide)

QG-6623-18

All items cataloged are normally stocked unless noted.

Not Stocked ✻ While Supplies Last

Code	New Product Number	Old Product Number	Description

Cardinal FABCOTE

Ultimate Pools

Can be used as an Inground, Above Ground, or Semi-Inground Pool. Contact your Salesman for Details!

All Ultimate Pool Kits include:

- 14 Gauge Galvanized Powder Coated Steel Walls
- Top Rail (2 choices: Aluminum Bendable Bullnose or Synthetic Wood)
- In-ground Quality Skimmer and Return
- Hardware, Drive Stakes, Joint Covers
- Sandbar Tile Liner
- Round, Oval, or Grecian Shape; Variety of Sizes Available

Auto Cover Systems

COVERSTAR

Automatic Pool Covers, Inc.

Most auto cover applications are unique...

- Will the track run on top of the deck or in the deck?
- Will the mechanism be housed in the ground for a new install or mounted on the deck for a retro-fit?
- Will the lid be poured to match your pavers or painted gray aluminum to match the coping?

Quality Pool's technical staff is here to walk you through the options and assist in seamlessly delivering the quality products you need to get the job done right the first time. Call us for a quote today!

Auto Cover Parts

Code	New Product Number	Old Product Number	Description
			COVERSTAR
	COVA1100	A1100	801/403 UG Detachable Black Slider Set
	COVC5125	C5125	Powerflex Detachable Rope w/Tab - 125'
	COVC5150	C5150	Powerflex Detachable Rope w/Tab - 150'
	COVH1070	H1070	Coverstar Pulley
	COVA2469A	A2469-A	Touchpad
			Automatic Pool Covers, Inc.
CALL	APCKA0189	KA0189	Small Channel Glide/Rope Repair Kit
CALL	APCKA0190	KA1090	Large Channel Glide/Rope Repair Kit
CALL	APCCC0090	CC0090	150' Rope
CALL	APCMC0030	MC0030	APC Pulley
CALL	APCCC0028	CC0028	Magnet for Sensor
CALL	APCKA0287	KA0287	Touchpad (Single Gang)
CALL	APCKA0352	KA0352	Touchpad Adaptor Plate (Double to Single Gang)

Please call for a quote on replacement fabrics.

All items cataloged are normally stocked unless noted.
Not Stocked While Supplies Last

Code	New Product Number	Old Product Number	Description
		Upright Foam Corner Inserts	
CALL	GLAUC3342NT	UC3342NT	3" X 42" Foam "3-in. Chopped" Insert
	GLAUC4442NT	UC4442NT	4" X 42" Foam "6-in. Radius" Insert
CALL	GLAUC4448NT	UC4448NT	4" X 48" Foam "6-in. Radius" Insert
		Kafko "Snap Lock" Clip	
CALL	LAHCOPKSNLKW81	COP-KSNLK-W8-1	8' "Snap Lock" Clip
		Miscellaneous	
	TAPBT36	BT36	**Coping Tape**, 2" x 60 Yards A red polyethylene tape with special adhesive that will not leave any residue after removal.
	MPO12TEXWH	12TEX-W	**Coping Paint** 12 oz. Aerosol Spray Can, Non-Skid, White
	CIN480152	TEKS	#12 X 1" TEK Screws (Bag of 100)

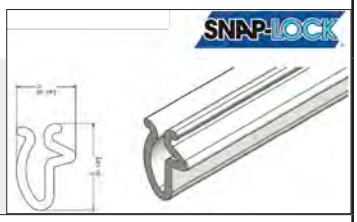

All items cataloged are normally stocked unless noted.

Not Stocked ✻ While Supplies Last

NOTES

QUALITY POOL SUPPLY

Vinyl Liner Order Form

Akron Fax: (844) 840-7665
Byron Center Fax: (800) 796-2882
Clio Fax: (888) 686-0880
Dublin Fax: (888) 968-3311
Perrysburg Fax: (888) 666-2982
Waterford Fax: (248) 673-0847

Information

Company Name: _____

Job Name: _____

Contact Phone #: _____

Liner Mfg. and/or Brand: _____

Wall Pattern: _____

Bottom Pattern: _____

Mil: _____

Other Info: _____

For Internal Use Only

DATE ORDERED:

P/O #

S/O#

TAG BOX:

SERIAL #

MISC INFO 1

NOTES:

Corners

❑ Radius:
X= FT / IN

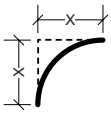

❑ Diagonal/Cut-Off:
X= FT / IN Y= FT / IN

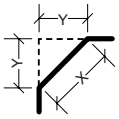

❑ Other:

Width

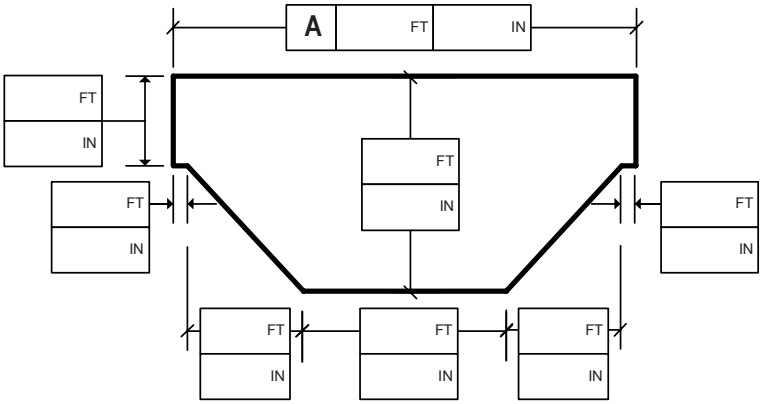

Length

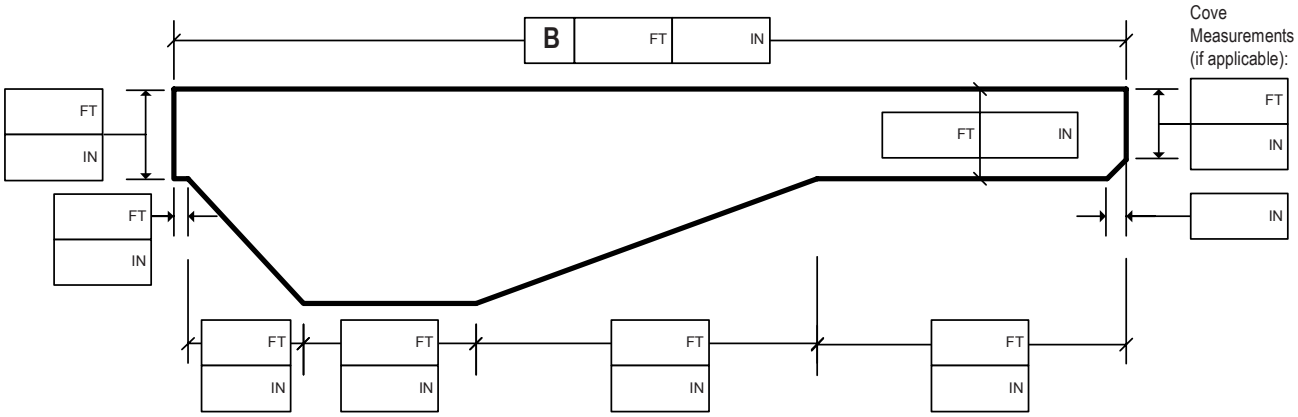

Cove Measurements (if applicable):
FT / IN
IN

All items cataloged are normally stocked unless noted.
Not Stocked ✻ While Supplies Last

Vinyl Liner Order Form

Vinyl Covered Step / Grecian Addendum Page

Vinyl Covered Step

Set Back Corner #1:

❑	Radius	IN
❑	Diagonal	IN
❑	Square	IN

Set Back Corner #2:

❑	Radius	IN
❑	Diagonal	IN
❑	Square	IN

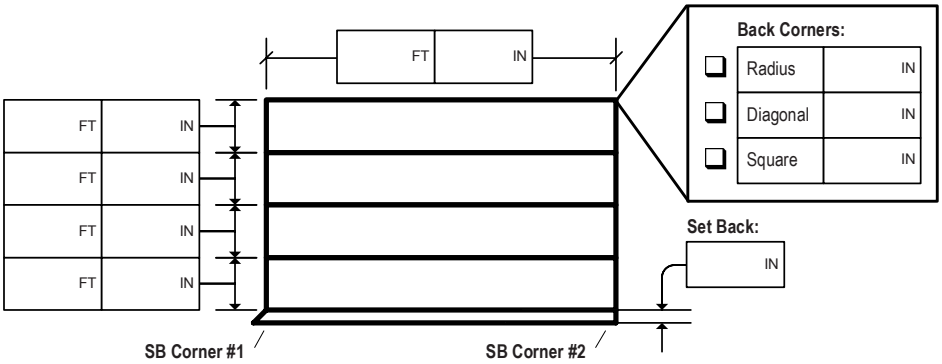

Step Location:

❑	A
❑	B
❑	C

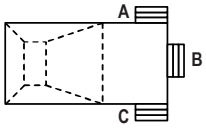

Are loops required for rods?	❑ Yes	❑ No
Is each tread beaded?	❑ Yes	❑ No

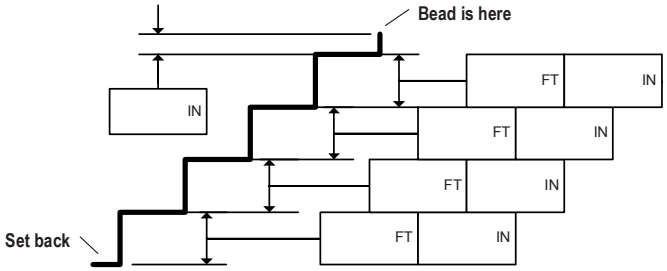

Additional Grecian Measurements

Hopper Pad Style:

❑ Rectangle

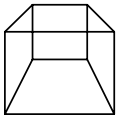

❑ Grecian

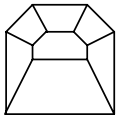

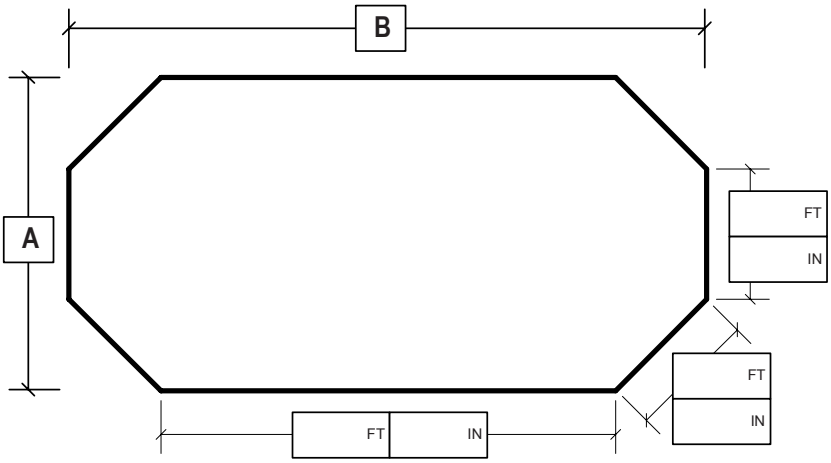

Vinyl Liner Order Form

True-L / Lazy-L Addendum Page

Additional True-L Measurements

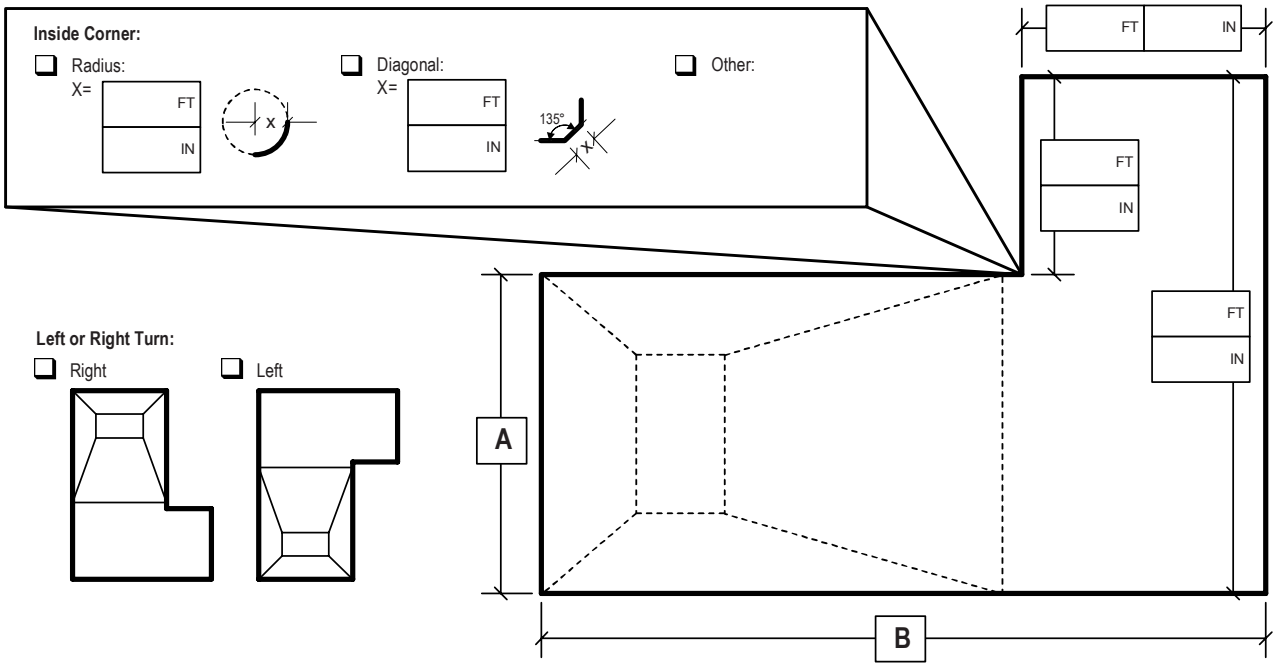

Additional Lazy-L Measurements

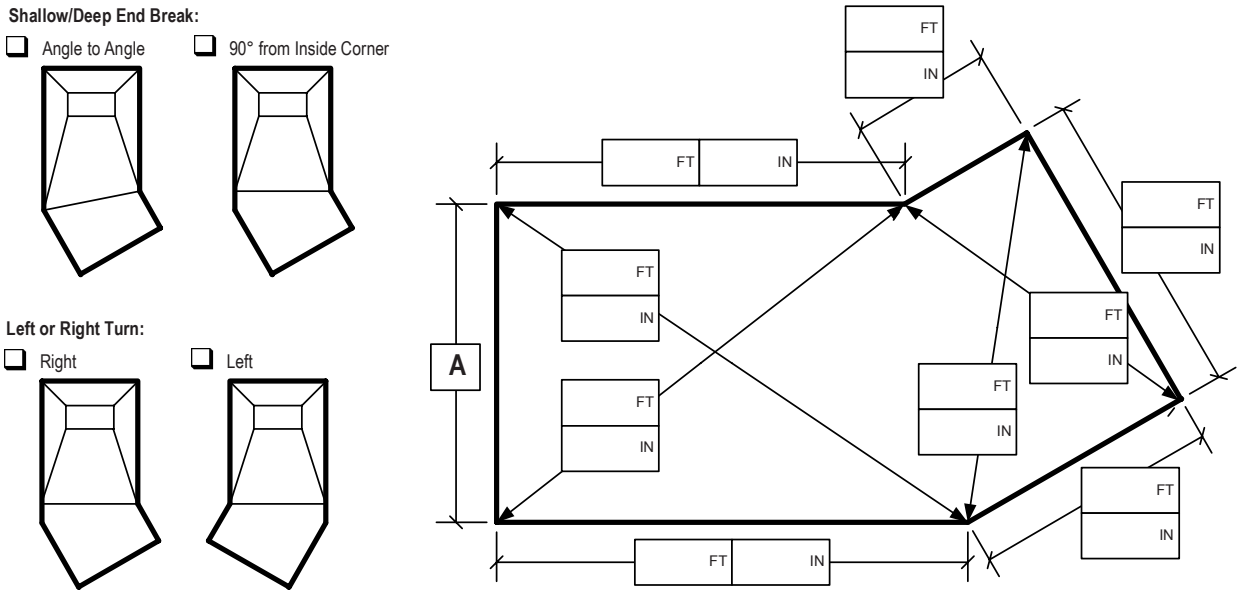

All items cataloged are normally stocked unless noted.

Not Stocked ✻ While Supplies Last

PRODUCTS

Backwash Hose 72
Brightline Filter Media (Glass) 70
DE 71
Filter Hose 72
Hayward 62
Hayward Cartridge 63
Jandy 69
Pentair 64
Pleatco Ultra Cartridges 80
Rainbow Cartridges 67
Unicel Cartridges 74
Sand 70
Sta-Rite Cartridges 64
Sta-Rite / Pentair Sand 65
Sta-Rite System 3 68
Zeobrite 70

http://www.qualitypool.com/parts/
Parts explosions for:
Waterway Carefree Water Filter
Waterway Crystal Water Filter Parts

PARTS

DE Grids 78
Hayward Valves 86
Hayward S-Series Sand 88
Hayward Micro Star C-Series 97
Hayward XStream Cartridge 96
Pentair / Sta-Rite Valves 102
Pentair Tagelus Sand 98
Pentair Rainbow Cartridge 108
Pentair Sand Dollar 99
Sta-Rite Posi-Flow and Pentair Star DE 110
Pentair Triton II Sand 104
Pentair Triton Commercial Sand 106
Replacement Valves 84
Sta-Rite Cristal Flo II 100
Sta-Rite System 3 112
Sta-Rite PLM100 109
Sta-Rite Cristal-Flo Sand 101
Swimquip 117

QUALITY POOL SUPPLY

Code	New Product Number	Old Product Number	Description			
		Sand Filters				
HAYWARD		**Pro Series**	SP0714T (1½") or SP071621 (2") Valve (included)			
		Top Mount	**Filter Size**	**Valve**	**Sand**	**GPM**
	HPPS166T	S166T	16"	1½"	100 lbs.	30
	HPPS180T	S180T	18"	1½"	150 lbs.	35
	HPPS210T	S210T	20½"	1½"	200 lbs.	44
	HPPS220T	S220T	22"	1½"	250 lbs.	52
	HPPS244T	S244T	24"	1½"	300 lbs.	62
	HPPS270T2	S270T2	27"	2"	350 lbs.	74
	HPPS310T2	S310T2	30"	2"	500 lbs.	98
		Side Mount	**Filter Size**	**Valve**	**Sand**	**GPM**
	HPPS244S	S244S	24"	1½"	300 lbs.	62
			SP0710X62 Valve (included)			
	HPPS200	S200	20"	1½"	200 lbs.	
			SPX0710X32 Valve (included)			
HAYWARD		**Above Ground Filter**				
	HPPVL40T32	VL40T32	13"	1¼"	42 lbs.	30
			Sand Filter with VL Series Pump. 4-Position Valve			
HAYWARD		**Pro Series**	SP0714T 1½" Valve (included)			
			Filter Size	**Pump**	**Sand**	
	HPPS166T92S	S166T92S	16"	1 hp Matrix	100 lbs.	
	HPPS166T1580S	S166T1580S	16"	1 hp Power-Flo LX	100 lbs.	
	HPPS180T92S	S180T92S	18"	1 hp Matrix	150 lbs.	
	HPPS180T1580S	S180T1580S	18"	1 hp Power-Flo LX	150 lbs.	
	HPPS180T93S	S180T93S	18"	1½ hp Matrix	150 lbs.	
	HPPS230T93S	S230T93S	23"	1½ hp Matrix	250 lbs.	
✻	HPPEC1155	EC1155	Suction and discharge hose package: Includes (2) hoses 1½" hose adaptors, and (2) hose clamps.			

S244T

S244S

S200

VL40T32

All items cataloged are normally stocked unless noted.

Not Stocked ✻ While Supplies Last

Code	New Product Number	Old Product Number	Description	
		Cartridge / DE Filters		
HAYWARD		**XStream Series Above Ground Systems**		
	HPPCC10092S	CC10092S	1 hp Matrix Pump	100 sq. ft Cartridge
	HPPCC15093S	CC15093S	1.5 hp Matrix Pump	150 sq. ft Cartridge
HAYWARD		**StarClear Plus ™ Inground FIlters**		
	HPPC900	C900	StarClear Plus	90 sq. ft
	HPPC1200	C1200	StarClear Plus	120 sq. ft
HAYWARD		**SwimClear ™ Inground Cartridge FIlters**		
CALL	HPPC3030	C3030	SwimClear	325 sq. ft
CALL	HPPC4030	C4030	SwimClear	425 sq. ft
CALL	HPPC100S	C100S	SwimClear	100 sq. ft
CALL	HPPC150S	C150S	SwimClear	150 sq. ft
CALL	HPPC200S	C200S	SwimClear	200 sq. ft
HAYWARD		**Perflex DE Filters**		
			DE	GPM
	HPPEC40AC	EC40AC	4 lbs.	40
	HPPEC65A	EC65A	6 lbs.	67
	HPPEC75A	EC75A	7 lbs.	100
			DE / GPM	Pump
	HPPEC40C92S	EC40C92S	4 lbs. / 40	1 hp Matrix
	HPPEC1161LK	EC1161LK	Elevated Mounting Base with sweep union, connecting loop, elbow adapter and hardware	
HAYWARD		**Pro-Grid DE Filters**		
	HPPDE2420	DE2420	24 sq. ft. Vertical DE (3 lbs.)	
	HPPDE3620	DE3620	36 sq. ft. Vertical DE (4½ lbs.)	
	HPPDE4820	DE4820	48 sq. ft. Vertical DE (6 lbs.)	
	HPPSP0710XR50	SP0710XR50	1½" Vari-Flo 6-Position Valve (can substitute SM1-HP2)	
	HPPSP0715XR50	SP0715XR50	2" Vari-Flo 6-Position Valve	
	PRASM1HP2	SM1-HP2	1½" Vari-Flo 6-Position Valve for above	

XStream

Star-Clear Plus

Swim Clear

EC40AC

EC75A

EC1161LK

All items cataloged are normally stocked unless noted.
◆ Not Stocked ✻ While Supplies Last

QUALITY POOL SUPPLY

Code	New Product Number	Old Product Number	Description	
		Cartridge / DE Filters		
PENTAIR TRADE GRADE		**Clean and Clear® Plus** • Large filter area for increased dirt capacity • 100% drain clean-out port • Durable injection-molded tank (see page 75 for replacement cartridge)		
	PEN160310	160310	240 sq. ft. Filtration Area 90 GPM	
	PEN160340	160340	320 sq. ft. Filtration Area 120 GPM	
	PEN160301	160301	420 sq. ft. Filtration Area 150 GPM	
	PEN160332	160332	520 sq. ft. Filtration Area 150 GPM	
PENTAIR TRADE GRADE		**Clean and Clear®** • Chemical-resistant tank body • Coreless cartridge for easy cleaning • High Flow manual air relief valve		
	PEN160315	160315	75 sq. ft. Filtration Area 75 GPM	
	PEN160316	160316	100 sq. ft. Filtration Area 100 GPM	
	PEN160317	160317	150 sq. ft. Filtration Area 150 GPM	
STA-RITE TRADE GRADE		**SYSTEM:2 Modular Media Filter** • Thermoplastic with durable, two-piece tank housing • Innovative balanced flow design for virtually maintenance-free operation • Longer filter cycles and less cleaning		
	PENPLM100	PLM100	100 sq. ft.	Optimal Performance (GPM): 50-75; Flow Rated (GPM) sq. ft.: 38-100
	PENPLM150	PLM150	150 sq. ft.	Optimal Performance (GPM): 50-113; Flow Rated (GPM) sq. ft.: 56-150
	PENPLM300	PLM300	300 sq. ft.	Optimal Performance (GPM): 50-120; Flow Rated (GPM) sq. ft.: 113-150
STA-RITE		**SYSTEM:2 Sta-Rite OEM Replacement Cartridges**		
	PEN270020030S	27002-0030S	PLD50 (D.E)	30 sq. ft.
	PEN270020100S	27002-0100S	PLM100	100 sq. ft.
	PEN270020150S	27002-0150S	PLM150	150 sq. ft.
	PEN270020300S	27002-0300S	PLM300	300 sq. ft.

Clean And Clear® Plus

Clean And Clear®

SYSTEM:2 PLM Series

27002-0030S

All items cataloged are normally stocked unless noted.

Not Stocked ✻ While Supplies Last

Code	New Product Number	Old Product Number	Description

Sand Filters

Cristal-Flo II

STA-RITE

- 1-piece extra-thick molded polyethylene tank
- 6-position valve
- Large drain plug is easy to access
- Color - Black

145360

			Filter Size	Sand	GPM	Valve
	PEN145360	145360	19½"	150 lbs.	40	1½"
	PEN145361	145361	22½"	250 lbs.	60	1½"
	PEN145362	145362	24"	300 lbs.	70	1½"
	PEN145387	145387	26"	350 lbs.	75	2"

Tagelus

PENTAIR TRADE GRADE

- 6-position top-mounted multiport valve
- Long filter cycles for economical operation
- Maximum Operating Pressure 50 psi

144126

			Model	Filter Size	Sand	GPM	Valve
	PEN144126	144126	TA40D	19½"	175 lbs.	40	1½"
	PEN144127	144127	TA50D	21½"	225 lbs.	50	1½"
	PEN145241	145241	TA60D	24½"	325 lbs.	60	1½"
CALL	PEN145385	145385	TA60D	24½"	325 lbs.	60	2"
	PEN145240	145240	TA100D	30½"	600 lbs.	100	2"
	PEN354570	354570	1½" Union Kit for above.				

Sand Dollar

PENTAIR TRADE GRADE

- Clamp style 6-position valve
  (262506 for 1½", 263085 for 2" - Included)
- Blow Molded thermoplastic tank
- Color - Almond

Sand Dollar

			Filter Size	Sand	GPM	Valve
	PEN145333	145333	26"	350 lbs.	75	1⅛"
	PEN145386	145386	26"	350 lbs.	75	2"

All items cataloged are normally stocked unless noted.
◆ Not Stocked ✻ While Supplies Last

QUALITY POOL SUPPLY

Code	New Product Number	Old Product Number	Description		
PENTAIR TRADE GRADE		**Triton II Sand Filter** 50 lb. rated. 2" Ports - NSF Listed. Color - Almond Valves priced separately below.			
			Model	**Size**	**Sand**
	PEN140264	140264	TR60	24½"	325 lbs.
		Triton C Commercial Sand Filter			
	PEN140315	140315	TR100C	30½"	600 lbs.
	PEN140316	140316	TR140C	36½"	925 lbs.
		Triton Valve Kits			
	PEN261050	261050	2" PVC Full-Flow 6-position valve. 2" slip ports. 125 GPM		
	PEN261055	261055	2" MPV, for sand filters		
	PEN261173	261173	Pentair Multiport Valve 1½" - For Triton and Quad D.E. Filters		
	PEN263064	263064	2" PVC Valve Push/Pull Almond		
	PEN263080	263080	Full Flow backwash valve. 3" outside dia. and 2½"dia. ports.		
PENTAIR		**Pentair Sand Dollar Filter System** Uses 6-position valve (262506 - Included)			
	PENPNSD0040DO116	PNSD19	19" Sand Dollar 40 Filter with 1.5 HP, 1 Speed, 3' standard Cord, 6' Hose Sand needed: 150 lbs. (PNSD0040DO1160)		
	PENPNSD006DO116	PNSD22	22" Sand Dollar 60 Filter with 1.5 HP, 1 Speed, 3' standard Cord, 6' Hose Sand needed: 250 lbs. (PNSD0060DO1160)		
STA-RITE		**Cristal-Flo II AG Filter System** • 1-piece polyethylene tank - 30 lb. rated • 6 position valve included (262506) with E-Z unions on all ports • Includes Hose Kit • Color - Black			
	PENSRCF2019OE116	SRCF19	19" Cristal-Flo II Filter and 1.5 HP Dynamo 1 Speed pump with 3' standard cord and 6' hose kit (150 lbs. of sand needed) (SRCF2019DO1160)		
	PENSRCF2022DO116	SRCF22	22" Cristal-Flo II Filter and 1.5 HP Dynamo 1 Speed pump with 3' standard cord and 6' hose kit (250 lbs. of sand needed) (SRCF2022DO1160)		

Triton II

261173

Sand Dollar

Cristal-Flo II

All items cataloged are normally stocked unless noted.

Not Stocked ✻ While Supplies Last

Code	New Product Number	Old Product Number	Description

Cartridge / DE Filters

Clean and Clear Cartridge System

- One-piece thermoplastic chemical-resistant tank
- Removable easy-to-clean filter cartridge
- Easy spin-on unions for fast and economical plumbing hookups

	PENPNCC0150OP116	PNNC015	Clean and Clear 150 Sq.Ft. Filter with 2 HP OptiFlo Pump, 3' standard cord and 6' hose kit (PNCC0150OP1160)

DYNAMIC Series III

Top load 25 sq. ft.

Filter for spas with chlorinator

R172522

✻	PENR172522	R172522	3 oz. cartridge and slip connections (1½" Socket) (Stocked in Byron Center only)
✻	PENR172523	R172523	3 oz. cartridge and slip connections (2" Socket)
✻	PENR172542BLK	R172542BLK	Filter Niche and cover for series II and III filters
✻	PENR170057	R170057	Spacesaver II Cap
	AQPAPCO2338	O-652	Spacesaver II Cap O-ring

FNS Plus Fiberglass DE Filter

PEN180006

			Filter Size	Flow Rate	8 Hour Turn	12 Hour Turn
	PEN180006	PEN180006	FNS 24	48 GPM	23,040 gal.	34,560 gal.
	PENPEN180007	PEN180007	FNS 36	72 GPM	34,560 gal.	51,840 gal.
	PENPEN180008	PEN180008	FNS 48	96 GPM	46,080 gal.	69,120 gal.
	PEN261177	261177	Multiport Valve 1½"			
✻	PEN261142	261142	HIFLOW Valve 2" with Bulkhead Fittings			
	PEN261152	261152	Multiport Valve 2"			

All items cataloged are normally stocked unless noted.
◆ Not Stocked ✻ While Supplies Last

QUALITY POOL SUPPLY

PENTAIR STA-RITE

SYSTEM:3 FILTRATION

BRICK AND MORTAR NO INTERNET SALES

Code	New Product Number	Old Product Number	Description	
		Cartridge Filter (No valve required)		
	PENS7M120	S7M120	300 sq. ft. Filter Area 100 GPM Maximum	
	PENS8M150	S8M150	450 sq. ft. Filter Area 125 GPM Maximum	
		SYSTEM:3 Sta-Rite OEM Replacement Cartridges		
	PEN250210200S	25021-0200S	S7M120 100 sq. ft.	Small/Inner
	PEN250220201S	25022-0201S	S7M120 200 sq. ft.	Large/Outer
	PEN250210202S	25021-0202S	S8M150 191 sq. ft.	Small/Inner
	PEN250220203S	25022-0203S	S8M150 259 sq. ft.	Large/Outer
		D.E. Filter (Valve required)		
	PENS7D75	S7D75	37 sq. ft., 74 GPM Maximum (Stocked in Byron Center only)	3.7 lbs.
	PENS8D110	S8D110	53 sq. ft., 106 GPM Maximum (Stocked in Byron Center only)	5.3 lbs.
		Sand Filter (Valve required)		
	PENS7S50	S7S50	2.4 sq. ft., 48 GPM Maximum	200 lb. sand filter
	PENS8S70	S8S70	3.4 sq. ft., 68 GPM Maximum	300 lb. sand filter
		Valves For all filters above All Feature 2" Union Connections		
	PEN182020150	18202-0150	1½" ABS 6-position Multiport - White (WC212-143P)	
	PRASM2SR2	SM2-SR2	2" ABS 6-position Multiport - Black (18201-0200 and WC212-150PN)	
	PEN263053	263053	2" x 2" ABS Push-Pull Slide Valve - Black	

All items cataloged are normally stocked unless noted.

Not Stocked ✻ While Supplies Last

Code	New Product Number	Old Product Number	Description
Jandy® Pro Series		**Cartridge Filters** • No backwashing • Less water waste • Performs well at low speeds, such as with variable-speed pool pumps	
Stocked in Waterford Warehouse Only *(We will transfer to any branch with no freight cost)*			
	JNDCS100	CS100	Small Tank, 100 sq. ft.
	JNDCS200	CS200	Small Tank, 200 sq. ft.
	JNDCS250	CS250	Small Tank, 250 sq. ft.
	JNDCV340	CV340	Versa Plumb, 340 sq. ft.
	JNDCV460	CV460	Versa Plumb, 460 sq. ft.
	JNDCV580	CV580	Versa Plumb, 580 sq. ft.
	JNDCL580	CL580	Large Tank, 580 sq. ft.
Jandy® Pro Series		**Sand Filters**	
	JNDSFTM2420	SFTM24-2.0	Pro Series Top Mount Sand Filter 24" with 2" valve
CALL	JNDSFTM2215	SFTM22-1.5	Pro Series Top Mount Sand Filter 22" with 1.5" valve (Stocked in Perrysburg Only)
CALL	JNDJS100SM	JS100-SM	JS Series Sidemount Sand Filter 30"
RELIANT®		**Above Ground Sand Filter System**	
	BCIF412T10	F412T1003	**Reliant:** 12" Sand Filter with 0.35 HP P1003Pump Cord, 6' Sand needed: 42 lbs.

Code	New Product Number	Old Product Number	Description
			Filter Sand *5% off for ordering a pallet*
	SND20	SAND20	50 lb. Bag — White .55mm 64/pallet **Stocked in Clio, Byron Center, Dublin & Perrysburg*
	SND1020	SAND1020	50 lb. Bag — Brown .80mm - 1.20mm 56/pallet **Stocked in Waterford and Akron*
	SND1635	SAND1635	50 lb. Bag — Brown Blend .40mm - 1.20mm (.50 effective size) — 56/pallet **Stocked in Perrysburg and Dublin*
		ADD	Surcharge per bag for job-site delivery or out of normal delivery range
			BrightLine Filter Media *For use in sand filters including those which specify #20 silica sand* *64 Bags per Pallet* **Clearer, Cleaner Water** Quickly and efficiently removes particles as fine as 5 microns. Does not breakdown like typical sand filter media, it can last up to 3 times longer. Backwashing takes less time and is required less frequently, saving water and chemicals. **Less Media Required** 20% less dense than typical sand filter media – 40 lbs. of BrightLine replaces 50 lbs. of sand. Made from 100% recycled glass
	SNDGLASS1230	GLASS1230	40 lb. Clear, Plastic Bag
			Zeobrite **Sand Substitute** *(50 lbs. of Zeobrite replaces 100 lbs. of sand)*
	ZEOZB25	ZEO25	25 lb. Bag (save 5% on pallet of 80)
	ZEOZB50	ZEO	50 lb. Bag (save 5% on pallet of 40)

SAND20

GLASS1230

Zeobrite

All items cataloged are normally stocked unless noted.

Not Stocked ✻ While Supplies Last

Code	New Product Number	Old Product Number	Description
		Diatomaceous Earth *15% off for ordering a pallet*	
	BKIDE25B	DE25B	25 lb. Box (70/pallet)
	BKIAC25	DE25	25 lb. Bag (75/pallet)
	BKIAC50	DE50	50 lb. Bag (36/pallet)
	AEQ300EZ	300EZ	DE scoop
		CelaPool Low Dust DE Powder	
	BKICPDE17	CELA6	6 lb. Bag - (132/pallet) • Celatom DE is the #1 choice of swim pool professionals • Easy to use. Less mess. Less waste • New thermally sealed bag for cleaner handling and storage • LOW DUST

DE25B

DE25 < 50

CELA6

All items cataloged are normally stocked unless noted.
◆ Not Stocked ✻ While Supplies Last

QUALITY POOL SUPPLY

Code	New Product Number	Old Product Number	Description
Haviflex		**Premium Spiral Filter Hose**	Silver/Black - *Features fused/leak-proof cuffs*
	HAVMF40011403CBP	60-305-03	1¼" × 3′
	HAVMF40114004CBP	65504	1¼" × 4′
	HAVMF40011406CBP	60-305-06	1¼" × 6′
	HAVMF40011408CBP	65506	1¼" × 8′
	JED6034503	60-345-03	1½" × 3′
	JED6034504	60-345-04	1½" × 4′
	JED6034506	60-345-06	1½" × 6′
	JED6034508	60-345-08	1½" × 8′
	JED6034512	60-345-12	1½" × 12′
✻	HAV65503	65503	1¼" × 3′
✻	HAV65505	65505	1¼" × 6′
✻	HAV65509	65509	1½" × 3′
	HPPDC176PAK24	DC176	Hayward Connector Hose - White
Haviflex		**Bulk Packaged Blow Molded Hose**	
	HAVEC100114252HF	772924	1¼" × 252′
	HAVEC100112150HF	772925	1½" × 150′
Quaker Plastics (A Division of Cardinal Systems, Inc.)		**Backwash Hose - Blue Vinyl**	
	CSYQT131	BH25	1½" × 25′ (includes clamp)
	CSYQT132	BH50	1½" × 50′ (includes clamp)
	CSYQT133	BH200	1½" × 200′
	CSYQT262	BH502	2" × 50′
	CSYQT261	BH2	2" × 200′
HAYWARD		**Fill-Water Filter**	A reusable pre-filter that attaches to a garden hose for filling a spa or pool. Filters down to 5 microns. Helps eliminate staining caused by excessive organics and metals in unfiltered water.
	HPPSP022310	SP022310	10" Bobby
	HPPSP022320	SP022320	20" Bobby
pure water. pure genius. hydropure TECHNOLOGIES		**Metal Trap Pre-Filters**	Attaches directly to garden hose - can be used for fresh-fill or top-off. Traps iron and copper from municipal and well water sources.
✻	HYPMT25	MT-25	25,000 Gallon Unit

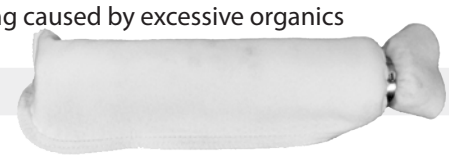

All items cataloged are normally stocked unless noted.

Not Stocked ✻ While Supplies Last

NOTES

QUALITY POOL SUPPLY

Unicel®

HOW TO FIND A FILTER CARTRIDGE REPLACEMENT

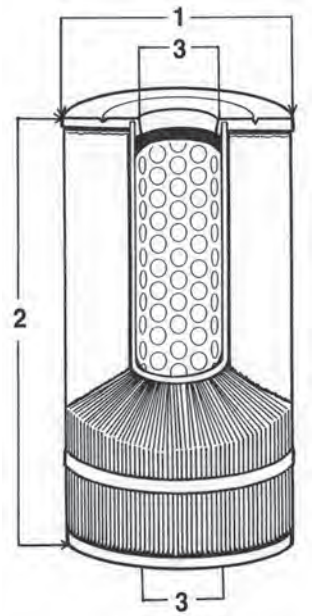

http://unicelfilters.com/retailers/Unicel_Replacement_Guide.asp

1. Measure the outside diameter of the cartridge (in inches, +/- 1/32”).
2. Measure the cartridge length (in inches, +/- 1/16”) including end caps but excluding any handles or other extensions. If possible, measure through the center rather than along the outside edge.
3. Identify the type of cartridge top and bottom using the end cap chart. If the top and/or bottom is “open,” measure the inside diameter (in inches, +/- 1/32”).
4. Record the OEM name and model of the filter the cartridge came out of.
5. Count the number of pleats (+/- 2); note whether there is a center core.

END CAP CONFIGURATIONS

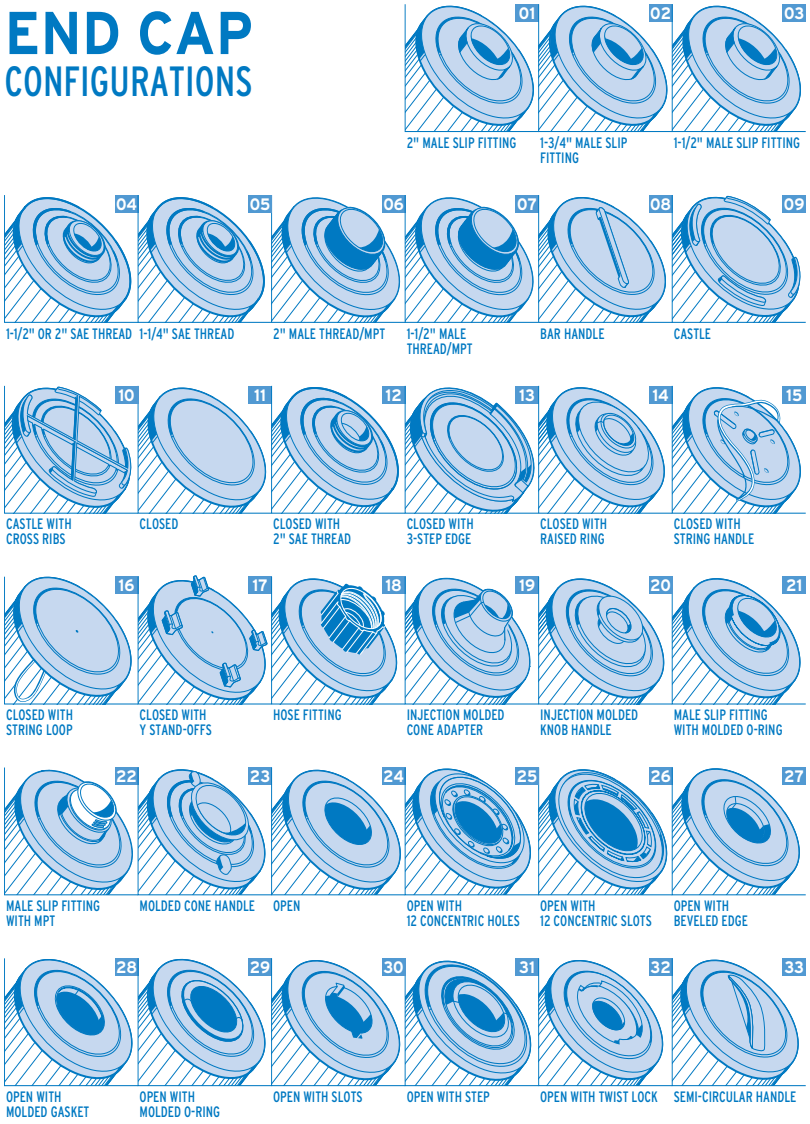

All items cataloged are normally stocked unless noted.
Not Stocked ✻ While Supplies Last

Filter Cartridges (page 1 of 3)

All are 3 oz. material except as noted.

Unicel's website is filled with useful information about cleaning, troubleshooting and a replacement guide. Go to **www.unicelfilters.com**

Code	New Product #	Old Product #	OEM #	SQ. FT.	OEM Name	DIA.	Length
	UNF4CH24	4CH-24		25	CTA Spa	4⅝	9¾
	UNF4CH30	4CH-30	1561-14	30	Dimension One (4 oz.)	4⅝	11⅞
	UNF4CH20	4CH-20		20		4⅝	6 ¾
	UNF4CH50	4CH-50		50	1½" MIP Bottom x Closed Top	4⅝	14¾
	UNF4CH925	4CH-925		20	Top Load 1½" SAE Thread	4⅝"	7-¼"
	UNF4CH935	4CH-935		35	Nordic Spas; Waterway	4 15/16	9¼
	UNF4CH940	4CH-940	1561-13	40	Dimension One	4⅝"	15"
	UNF4CH949	4CH-949		50	Waterway, Dynasty, Rising Dragon	4 15/16"	13½"
	UNF5CH352	5CH-352		35	Marquis Spa	4 3/16"	12½"
	UNF5CH37	5CH-37		37.5	Aquaterra	5 5/16"	9"
	UNF5CH402	5CH-402	FP502	40	South Pacific Spas 2/09 & after	5 3/16"	10¾"
	UNF5CH752	5CH-752		75	Cal Spa	5 3/16"	16⅛"
	UNF6CH25	6CH-25		25	Closed Top x 1½" MPT Bottom	6"	5½"
	UNF6CH26	6CH-26		25	Closed Top x 1½" MPT Bottom	6"	7"
	UNF6CH47	6CH-47		47	Closed Top x 1½" MPT Bottom	6"	9⅛"
	UNF6CH502	6CH-502		50	Artesian Spas with 2" MPT	6¾"	8"
	UNF6CH940	6CH-940		45	Three Rivers	6"	8¼"
CALL	UNF6CH941	6CH-941		45	Saratoga Spa Upper Cartridge - Fits Mammoth Tubs	6"	8¼"
CALL	UNF6CH942	6CH-942		45	Saratoga Spa Upper Cartridge - Fits Mammoth Tubs	6"	8¼"
	UNF6CH960	6CH-960		52	Semi Circular Handle x 2" SAE	6¾"	15½"
	UNF7CH50	7CH-50		50	Closed Top x 1½" MPT Bottom	7"	14¾"
	UNF7CH322	7CH-322	100520	32	Coleman; Master Spas/Down East Eco-Pur	7"	8"
	UNF7CH975	7CH-975	1561-12	52	Dimension One, closed top/SAE fitting	7"	10½"
	UNF8CH66	8CH-66		60	Master Spa	8"	9¼"
	UNFC2302	C-2302	R170051	14.5	Rainbow	2⅞"	17 1/16"
	UNFC2303	C-2303	R170052	8.5	Rainbow	2⅞"	17 1/16"
	UNFC2699	C-2699		4	Fill Filter (6 oz.)	2⅞"	9 ¾"
	UNFC3302	C-3302	58602	2	Intex Skim Filter	3⅛"	3 11/16"
	UNFC3310AM	C-3310AM		8	Master Spas/Down East Eco Pur Inner Element Micro Filter use with C-9330 (2002-2005) or C-8341 (2006 -Present)	3⅞"	7"
	UNFC4301	C-4301	CL-2800	28	Martec	4 15/16"	14⅞"
	UNFC4310	C-4310		10	Skim Filter	4¼"	4"
	UNFC4313	C-4313	SA-3766	2.5	Aqua Leisure Size "1"	4¼"	3¾"
	UNFC4314AM	C-4314AM		13.5	Saratoga Spa Anti-Microbial Fits Whitney, Rainer, & Pilot Tubs	4⅝"	6"
	UNFC4320	C-4320	CX200RE	20	Hayward Micro Star	4⅝"	11⅞"
	UNFC4321	C-4321	R172653	25	Filter Element (South Pacific Spas - Pre 2/09)	4 15/16"	13 5/16"
	UNFC4325	C-4325	CX225RE	25	Hayward Micro Star	4⅝"	11⅞"

All items cataloged are normally stocked unless noted.

◆ Not Stocked ✻ While Supplies Last

QUALITY POOL SUPPLY

Filter Cartridges (page 2 of 3)

All are 3 oz. material except as noted.

Unicel's web site is filled with useful information about cleaning, troubleshooting and a replacement guide. Go to **www.unicelfilters.com**

Code	New Product #	Old Product #	OEM #	SQ. FT.	OEM Name	DIA.	Length
	UNFC4326	C-4326	R173429	25	Waterway (Royal)	4 15/16"	13 5/16"
	UNFC4327AM	C-4327AM		25	Saratoga Spa Anti-Microbial Fits Teton, Fuji, Shasta, K2, Denali,Everest. Tubs	4 5/8"	11 5/8"
	UNFC4332	C-4332	SC-2200	32	Martec	4 15/16"	11 7/8"
	UNFC4335	C-4335	R173431	35	Rainbow	4 15/16"	9 1/4"
	UNFC4401	C-4401 (Set of 2)	R172606	35	Rainbow (4 oz.)	4 15/16"	4 5/8"
	UNFC4405	C-4405 (Set of 2)	R173433	50	Rainbow (4 oz.)	4 15/16"	6 5/8"
	UNFC4605	C-4605	PMS-8	8	Muskin with Core (4 oz.)	4 15/16"	8"
	UNFC4607	C-4607	F-120	5	Intex Type A (4 oz.)	4 1/4"	8"
	UNFC4625	C-4625	R172325	25	Rainbow (4 oz.)	4 15/16"	13 5/16"
	UNFC4950	C-4950	R172380	50	Rainbow	4 15/16"	13 5/16"
	UNFC4975	C-4975	RTL-75	75	Rainbow	4 15/16"	20 1/8"
	UNFC4995	C-4995	817-1000	95	Waterway Top Load In-Line	4 15/16"	23 5/8"
	UNFC5300	C-5300		50	Jacuzzi	5 11/16"	10 3/8"
	UNFC5315	C-5315	Type B	15	Intex "B" Filter	5 3/4"	10"
	UNFC5330	C-5330	Type D	30	Intex Type D	5 3/4"	12"
	UNFC5345	C-5345	173584	45	Rec Warehouse	5 5/16"	10 1/8"
	UNFC5346	C-5346	20044	50	Marquis (Closed Top - Bottom 1 5/8" ID)	5 3/16"	14 1/8"
	UNFC5374	C-5374	303433	65	Rec Warehouse S2/G2 Spa	5 5/16"	14 13/16
	UNFC5423	C-5423	20045	34	Pacific Marquis	5 3/16"	11 15/16"
	UNFC5601	C-5601	43-2954-01	25	Jacuzzi	5 11/16	10 3/8"
	UNFC5625	C-5625	42-2891-08	25	Jacuzzi (4 oz.)	5"	13 5/16"
	UNFC5637	C-5637		40	Pacific Marquis	5 3/16"	19 5/8"
	UNFC6330	C-6330		30	Hot Springs/Watkins Mfg.	6"	10-1/2"
	UNFC6430	C-6430	31489	30	Watkins (4 oz.)	6"	10 1/2"
	UNFC6616	C-6616	PMS-16	16	Muskin (4 oz.)	6 1/4"	8"
	UNFC7330	C-7330		30	Master Spas/Down East Outer (2002-2005, use with C-3310AM)	7"	7 1/4"
	UNFC7350	C-7350	1019401	50	Caldera Spas	7"	10 3/4"
	UNFC7367	C-7367	1561-00	75	Dimension One Spas	7 1/8"	10 1/2"
	UNFC7375	C-7375	1019301	75	Caldera Spas	7"	14 3/4"
	UNFC7442	C-7442	CX410RE	40	Hayward (4 oz.)	7"	14 3/16"
	UNFC7469	C-7469		60	Clean & Clear (4 oz.)	7"	14 1/8"
CALL	UNFC74684	C-7468-4	257000	115	4 Pack Replacement for CV460 (Stocked in Waterford Only)	7"	27"
	UNFC7470	C-7470		80	Clean & Clear Crystal Water (4 oz.)	7"	20"
	UNFC7471	C-7471		105	Clean & Clear Crystal Water (4 oz.)	7"	26 1/16"
	UNFC7472	C-7472		125	Clean & Clear Crystal Water (4 oz.)	7"	32 1/16"
	UNFC7483	C-7483	CX580XRE	81	Hayward (4 oz.)	7"	19 5/8"
	UNFC7488	C-7488		106	Hayward CX880XRE (4 oz.)	7"	25 1/2"
	UNFC7626	C-7626	CX250RE	25	Hayward Micro Star (4 oz.)	7"	9 13/16"

All items cataloged are normally stocked unless noted.

Not Stocked ✻ While Supplies Last

Filter Cartridges (page 3 of 3)

All are 3 oz. material except as noted.

Unicel's web site is filled with useful information about cleaning, troubleshooting and a replacement guide. Go to **www.unicelfilters.com**

Code	New Product #	Old Product #	OEM #	SQ. FT.	OEM Name	DIA.	Length
	UNFC7656	C-7656	CX500RE	50	Hayward (4 oz.)	7"	19⅝"
	UNFC7698	C-7698	CX1000RE	100	Hayward (4 oz.)	7"	29⁷⁄₁₆"
	UNFC8311	C-8311	CCX1000RE	100	Hayward XStream	8¹⁵⁄₁₆"	17⅜"
	UNFC8316	C-8316	CCX1500RE	150	Hayward XStream	8¹⁵⁄₁₆"	23⁵⁄₁₆"
	UNFC8317	C-8317		175	Hayward XStream CC1750RE	8⁵⁄₁₆"	23⁵⁄₁₆"
CALL	UNFC8418	C-8418	R0462400	200	Jandy CS200 (Stocked in Waterford Only)	8⁵⁄₁₆"	33⅜"
	UNFC8326	C-8326	6540-488	125	Sundance Spas	8⁷⁄₁₆"	19"
	UNFC8341	C-8341	73722	40	Master Spas/Down East Eco Pure Outer Cartridge (2006-Present, for use with C-3310AM)	8"	6¾"
	UNFC8350	C-8350	PVT50W	50	Vita Spa	8½"	7¼"
	UNFC8399	C-8399	1039607	100	Caldera Spa	8"	16½"
	UNFC8409	C-8409	CX900RE	90	Hayward Star Clear Plus (4 oz.)	8¹⁵⁄₁₆"	17⅜"
	UNFC8412	C-8412	CX1200RE	120	Hayward Star Clear Plus (4 oz.)	8¹⁵⁄₁₆"	23⁵⁄₁₆"
	UNFC8417	C-8417	CX1750RE	175	Hayward Star-Clear Plus (4 oz.)	8¹⁵⁄₁₆"	28³⁄₁₆"
	UNFC8450	C-8450	100593	50	Coleman (Bottom 2" Male Slip)	8"	9"
	UNFC8465	C-8465	31114	65	Watkins	8½"	10½"
	UNFC8475	C-8475	100594	75	Coleman (Bottom 2" Male Slip)	8"	13"
	UNFC8600	C-8600	CX800RE	75	Hayward (4 oz.) (Also replaces CX1500-RE)	8½"	17⅜"
	HPPCX800RE	CX800RE		75	Hayward (4 oz.) (OEM Replacement)	8½"	17⅜"
	UNFC8610	C-8610	CX1100RE	100	Hayward (4 oz.)	8½"	23⁵⁄₁₆"
	UNFC9402	C-9402	817-0100	100	Waterway Replacement (4 oz.)	9¹⁵⁄₁₆"	19⁵⁄₁₆"
	UNFC9403	C-9403	817-0150	150	Waterway Replacement (4 oz.)	9¹⁵⁄₁₆"	25⁵⁄₁₆"
	UNFC9405	C-9405	R173213	50	Predator (4 oz.)	10¹⁄₁₆"	8⁹⁄₁₆"
	UNFC9410	C-9410	R173215	100	Clean & Clear (No Core) (4 oz.)	10¹⁄₁₆"	23⅝"
	UNFC9415	C-9415	R173216	150	Clean & Clear (No Core) (4 oz.)	10¹⁄₁₆"	31⅛"
	UNFC9475	C-9475	42350900	75	Jacuzzi CFR-75 (4 oz.)	9¹⁵⁄₁₆"	14¼"
	UNFC9481	C-9481	42367508R	120	Jacuzzi Brothers (4 oz.)	10"	20¹⁄₁₆"
CALL	UNFC9485	C-9485	CX850RE	85	Hayward CX850RE (Stocked in Perrysburg Only)	9¼"	14³⁄₁₆"
	UNFC9499	C-9499	CX1250RE	120	Hayward (4 oz.)	9¼"	19⅝"
	UNFC9650	C-9650	42294009	50	Jacuzzi (4 oz.)	9¹⁵⁄₁₆"	10"
	UNFC9699	C-9699	42294108	100	Jacuzzi (4 oz.)	9¹⁵⁄₁₆"	19⅞"
	UNFT380	T-380	OTC / 6 - 4	6	Harmsco (4 oz.) Better Filter	2¾"	9¾"

POSI-FLO Unicel Replacement Cartridges

			Filter Model	Sq. Ft.	Diameter	Length
	UNFUHDSR35	UHD-SR35	WC108-55S2X	37	8¹¹⁄₁₆"	9¾"
	UNFUHDSR50	UHD-SR50	WC108-56S2X	52	8¹¹⁄₁₆"	13⁵⁄₁₆"
	UNFUHDSR70	UHD-SR70	WC108-57S2X	72	8¹¹⁄₁₆"	18³⁄₁₆"
	UNFUHDSR100	UHD-SR100	WC108-58S2X	102	8¹¹⁄₁₆"	25¹¹⁄₁₆"
	UNFUHDSR137	UHD-SR137	WC108-70S2X	137	8¹¹⁄₁₆"	31¼"

QUALITY POOL SUPPLY

Code	New Product #	Old Product #	Description	Width	Length	Sta-Rite Number
Unicel		**D.E. Grids**				
		Sta-Rite				
		System3 S7D75				
	UNFFG3912	FG-3912	Offset port	12 7/16"	18"	23900-1171
	UNFFG3913	FG-3913	Offset port	13 3/4"	18"	23900-1170
	UNFFG3009	FG-3009	Center port	9 11/16"	18"	23900-1173
	UNFFG3012	FG-3012	Center port	12 7/16"	18"	23900-1175
		System3 S7D75 & S8D110				
	UNFFG3016	FG-3016	Center port	16 1/2"	18"	23900-0033
	UNFFG3015	FG-3015	Center port	15 3/16"	18"	23900-1174
		System3 S8D110 Only				
	UNFFG3011	FG-3011	Center Port	11"	18"	23900-0032
	UNFFG3019	FG-3019	Center Port	19 15/16"	18"	23900-0144
	UNFFG3916	FG-3916	Offset Port	16 1/2"	18"	23900-1172
		Swimquip				
	UNFFG3013	FG-3013	Center Port	13 3/4"	18"	23900-0052
	UNFFG3022	FG-3022	Center Port	22"	18"	23900-0034
	UNFFG1002	FG-1002	American, Hayward, PacFab, Sta-Rite	11"	12"	
	UNFFG1003	FG-1003	American, Hayward, PacFab, Sta-Rite	11"	18"	
		American, PacFab, Hayward, Sta-Rite, Jandy				
	UNFFG1004	FG-1004	48 sq. ft.	11"	24"	WC108-4A
	UNFFG1005	FG-1005	60 sq. ft.	11"	30"	WC108-5A
	UNFFG1006	FG-1006	72 sq. ft.	11"	36"	WC108-5A
	UNFFG1236	FG-1236	Purex	10 3/4"	19 3/8"	
		Pentair				
	UNFPG1902	PG-1902	Partial / Small Grid	9 3/4"	12"	59001000
	UNFPG1903	PG-1903	Partial / Small Grid	9 3/4"	18"	59001700
	UNFPG1904	PG-1904	Partial / Small Grid	9 3/4"	24"	59002300
	UNFS7146	S-7146	DE S-Filter Disc	14 1/2"		530058
	UNFS7172	S-7172	DE S-Filter Disc	17"		530014
	UNFS0175	S-0175	Grid Assembly	17"		WC208-13

All items cataloged are normally stocked unless noted.

Not Stocked ✻ While Supplies Last

NOTES

QUALITY POOL SUPPLY

ONLY AVAILABLE THROUGH AUTHORIZED SERVICE PROFESSIONALS DEALERS • DISTRIBUTORS

PleatcoAdvancedULTRA™ FEATURING PUREPLEAT TECHNOLOGY PATENT PENDING

Spa Cartridges

Code	New Product Number	Old Product Number	Description
	PLEULTRAS2	ULTRA-S2	Advanced Ultra Spa Cross Ref. for Unicel 4CH-925
	PLEULTRAS3	ULTRA-S3	Advanced Ultra Spa Cross Ref. for Unicel 5CH-352, 5CH-502
	PLEULTRAS5	ULTRA-S5	Advanced Ultra Spa Cross Ref. for Unicel C-4950, C-4326
	PLEULTRAS6	ULTRA-S6	Advanced Ultra Spa Cross Ref. for Unicel 4CH-935
	PLEULTRAS7	ULTRA-S7	Advanced Ultra Spa Cross Ref. for Unicel C-4335
	PLEULTRAS8	ULTRA-S8	Advanced Ultra Spa Cross Ref. for Unicel C-4975
	PLEULTRAS10	ULTRA-S10	Advanced Ultra Spa Cross Ref. for Unicel C-5345
	PLEULTRAS12	ULTRA-S12	Advanced Ultra Spa Cross Ref. for Unicel C-6430
	PLEULTRAS13	ULTRA-S13	Advanced Ultra Spa Cross Ref. for Unicel 6CH-925, 6CH-940
	PLEULTRAS15	ULTRA-S15	Advanced Ultra Spa Cross Ref. for Unicel 6CH-960
	PLEULTRAS16	ULTRA-S16	Advanced Ultra Spa Cross Ref. for Unicel C-8465
	PLEULTRAS17	ULTRA-S17	Advanced Ultra Spa Cross Ref. for Unicel 4CH-926, 4CH-949
	PLEULTRAS18	ULTRA-S18	Advanced Ultra Spa Cross Ref. for Unicel C-5374
	PLEULTRAS19	ULTRA-S19	Advanced Ultra Spa Cross Ref. for Unicel 7CH-322
	PLEULTRAS20	ULTRA-S20	Advanced Ultra Spa Cross Ref. for Unicel 6CH-502
	PLEULTRAS21	ULTRA-S21	Advanced Ultra Spa Cross Ref. for Unicel c-8320, C-8325
	PLEULTRAS22	ULTRA-S22	Advanced Ultra Spa Cross Ref. for Unicel C-8326
	PLEULTRAS24	ULTRA-S24	Advanced Ultra Spa Cross Ref. for Unicel 6CH-47
	PLEULTRAS25	ULTRA-S25	Advanced Ultra Spa Cross Ref. for Unicel C-5601, C-5300
	PLEULTRAS26	ULTRA-S26	Advanced Ultra Spa Cross Ref. for Unicel C-5625

PleatcoPure® THE CLEAN WATER COMPANY

	PLEPWASHSPAPAK	PWASH-SPA-PAK	Filter Wash Tablets for Spas (Box of 40)
	PLEPWASHPOOLPAK	PWASH-POOL-PAK	Filter Wash Tablets for Pools (Box of 30)
	PLEPPS2100	PPS2100	Spa Fill (Sediment) Cartridge - 2¾" Diameter x 10" Closed" Top X ¾" FGH" Bottom 0 sq. ft.
	PLEPPS6120	PPS6120	Pool Fill (sediment) cartridge - 5.875" Diameter x 12.0625" Closed" Top X ¾" FGH" Bottom 0 sq. ft.
	PLEPPS750	PPS750	Sundance MicroClean - 7¾" Outer Diameter, 4¾" Inner Diameter, 5" Length *Stocked in Perrysburg only

All items cataloged are normally stocked unless noted.

Not Stocked ✻ While Supplies Last

Pleatco AdvancedULTRA
REVOLUTIONARY FILTRATION TECHNOLOGY
PATENT PENDING

Spa Cartridges Cross Reference

Pleatco Advanced Ultra Part #	Replaces Pleatco Part	Unicel #	Filbur #	Description
ULTRA-S2	PSANT20P3	4CH-925	FC-0124	Futura Spa (Strong Industries) - 4.75" Dia x 7.0625" Handle" Top X 1 1/2" SAE" Bottom 20 sq. ft.
ULTRA-S3	PPM35SC-F2M	5CH-352	FC-0196	Pacific Marquis Spas - 5.25" Dia x 12.1875" Handle" Top X 2" MPT" Bottom 35 sq. ft.
	PPM50SC-F2M	5CH-502	FC-0195	Pacific Marquis Spas - 5.25" Dia x 12.1875" Handle" Top X 2" MPT" Bottom 50 sq. ft.
ULTRA-S5	PRB50-IN	C-4950	FC-2390	Dynamic Series IV - DFM, DFML, Series II & III RTL/RCF-50, Series I RDC-50, RDC-50S, Waterway, Custom Molded Products - 5" Dia x 13.3125" 2.125" Top X 2.125" Bottom 50 sq. ft.
	PRB25-IN	C-4326	FC-2375	Dynamic Series I RDC-25, I RDC-25S, Dynamic Series II & II RTL/RCF-25, Dynamic Series IV-DFM, DFML, Waterway 25 In-Line, Custom Molded Products - 5" Dia x 13.3125" 2.125" Top X 2.125" Bottom 25 sq. ft.
ULTRA-S6	PWW35L	4CH-935	FC-0170	Waterway Teleweir 35 SF - 5" Dia x 8.5" Handle" Top X 1 1/2" FEMALE SAE" Bottom 35 sq. ft.
ULTRA-S7	PRB35-IN	C-4335	FC-2385	Dynamic Series IV - DFM, DFML, Waterway 35, In-Line - 5" Dia x 9.25" 2.125" Top X 2.125" Bottom 35 sq. ft.
ULTRA-S8	PRB75	C-4975	FC-2395	Dynamic Series V-DSC-75, Series II & III RTL/RCF-75, Custom Molded Products - 5" Dia x 20.125" 2.125" Top X 2.125" Bottom 75 sq. ft.
ULTRA-S9	PFF50P4	5CH-45	CF-2401	Freeflow Spas Legend - 5.3125" Dia x 10" 2.125" Top X 1 1/2" MPT" Bottom 45 sq. ft.
ULTRA-S10	PLBS50	C-5345	FC-2970	Leisure Bay, Dynasty Spas, Waterway, Rainbow - 5.3125" Dia x 10.125" 2.125" Top X 2.125" Bottom 50 sq. ft.
ULTRA-S12	PWK30	C-6430	FC-3915	Watkins Hot Spring Spas - 5.875" Dia x 10.5" 1.9375" Top X 1.9375" Bottom 30 sq. ft.
ULTRA-S13	PWW25P3	6CH-925	N/A	Gulf Coast Spas - 6" Dia x 7.625" Handle" Top X 1 1/2" SAE" Bottom 35 sq. ft.
	PWW35P3	N/A	N/A	Outback Spas - 6" Dia x 7.625" Handle" Top X 1 1/2" SAE" Bottom 35 sq. ft.
	PWW50P3	6CH-940	FC-0359	Waterway Front Access Skimmer (2 required) - 6" Dia x 7.625" Handle" Top X 1 1/2" SAE" Bottom 40 sq. ft.
ULTRA-S15	PJW60TL-F2S	6CH-960	FC-2800	Jacuzzi Premium J-300, J400 - 6.625" Dia x 14.875" Handle" Top X 2" SAE" Bottom 60 sq. ft.
ULTRA-S16	PWK45N	N/A	N/A	Watkins Hot Spring Spas - 8.5" Dia x 10.5625" 3" Top X 3" Bottom 45 sq. ft.
	PWK65	C-8465	FC-3960	Watkins Hot Spring Spas upgrade from PWK45N - 8.5" Dia x 10.5" 3" Top X 3" Bottom 65 sq. ft.
ULTRA-S17	PWW25L	4CH-926	N/A	Waterway Teleweir 25 - 5" Dia x 13.1875" Handle" Top X 1 1/2" FEMALE SAE" Bottom 25 sq. ft.
	PWW50L	4CH-949	FC-0172	Waterway Teleweir 50 - 5" Dia x 13.1875" Handle" Top X 1 1/2" FEMALE SAE" Bottom 50 sq. ft.
ULTRA-S18	PLBS75	C-5374	FC-2971	Rainbow, Waterway, Leisure Bay, S2/G2 Spa 75 - 5.3125" Dia x 14.75" 2.125" Top X 2.125" Bottom 75 Sq Ft.
ULTRA-S19	PAS35-F2M	7CH-322	FC-0420	Artesian Top Load Spa (Coleman) - 7.125" Dia x 7.5625" Handle" Top X 2" MPT" Bottom 35 sq. ft.
ULTRA-S20	PAS50SV-F2M	6CH-502	FC-0311	Artesian Spas 50 - 6.75" Dia x 8" Handle" Top X 2" MPT" Bottom 50 sq. ft.
ULTRA-S21	PSD125	C-8320	FC-2750	Sundance 120
ULTRA-S22	PSD125-2000	C-8326	FC-2780	Sundance Double End 120
ULTRA-S24	PTL47W-P4	6CH-47	FC-0315	Advanced/LA Spas; Aber Hottub
ULTRA-S25	PJW23	C-5601	FC-1330	Jacuzzi Aero, Caressa, C/top
ULTRA-S26	PJ25-IN-4	C-5625	FC-1425	Jacuzzi CFR/CFT 25

All items cataloged are normally stocked unless noted.
◆ Not Stocked ✻ While Supplies Last

QUALITY POOL SUPPLY

Pleatco AdvancedULTRA REVOLUTIONARY FILTRATION TECHNOLOGY PATENT PENDING

Pool Cartridges

Code	New Product Number	Old Product Number	Description
	PLEULTRAA1	ULTRA-A1	Advanced Ultra Cross Ref. For Unicel C-7488 or C-7498
	PLEULTRAA3	ULTRA-A3	Advanced Ultra Cross Ref. For Unicel C-7483
	PLEULTRAA4	ULTRA-A4	Advanced Ultra Cross Ref. For Unicel C-7458 or C-7469
	PLEULTRAA5	ULTRA-A5	Advanced Ultra Cross Ref. For Unicel C-7470
	PLEULTRAA6	ULTRA-A6	Advanced Ultra Cross Ref. For Unicel C-7471
	PLEULTRAA7	ULTRA-A7	Advanced Ultra Cross Ref. For Unicel C-7472
	PLEULTRAA11	ULTRA-A11	Advanced Ultra Cross Ref. For Unicel C-7656
	PLEULTRAA14	ULTRA-A14	Advanced Ultra Cross Ref. For Unicel C-7442
	PLEULTRAB2	ULTRA-B2	Advanced Ultra Cross Ref. For Unicel C-8412 or C-8410
	PLEULTRAB3	ULTRA-B3	Advanced Ultra Cross Ref. For Unicel C-8414 or C-8316
	PLEULTRAB4	ULTRA-B4	Advanced Ultra Cross Ref. For Unicel C-8417
	PLEULTRAB6	ULTRA-B6	Advanced Ultra Cross Ref. For Unicel C-8409, C-8411, or C-8311
	PLEULTRAB7	ULTRA-B7	Advanced Ultra Cross Ref. For Unicel C-8414 or C-8311
	PLEULTRAB8	ULTRA-B8	Advanced Ultra Cross Ref. For Unicel C-9499
	PLEULTRAC1	ULTRA-C1	Advanced Ultra Cross Ref. For Unicel C-9405
	PLEULTRAC3	ULTRA-C3	Advanced Ultra Cross Ref. For Unicel C-9410
	PLEULTRAC4	ULTRA-C4	Advanced Ultra Cross Ref. For Unicel C-9415
	PLEULTRAC6	ULTRA-C6	Advanced Ultra Cross Ref. For Unicel C-9401
	PLEULTRAC7	ULTRA-C7	Advanced Ultra Cross Ref. For Unicel C-9402
	PLEULTRAC8	ULTRA-C8	Advanced Ultra Cross Ref. For Unicel C-9403
	PLEULTRAD1	ULTRA-D1	Advanced Ultra Cross Ref. For Unicel C-8610
	PLEULTRAD2	ULTRA-D2	Advanced Ultra Cross Ref. For Unicel C-8600

All items cataloged are normally stocked unless noted.

Not Stocked ✻ While Supplies Last

Pleatco Advanced ULTRA
REVOLUTIONARY FILTRATION TECHNOLOGY
PATENT PENDING

Pool Cartridges Cross Reference

Pleatco Advanced Ultra Part #	Replaces Pleatco Part	Unicel #	Filbur #	Description
ULTRA-A1	PA106	C-7488	FC-1226	Hayward SwimClear C-4025, C-4030, open w/molded gasket
	PA100N	C-7488	FC-1226	Hayward Super-Star-Clear C4000, SwimClear C4020, Super-Star-Clear C4000S (stainless steel), open w/molded gasket
	PA112	C-7489	FC-1275	Hayward Super-Star-Clear C-4500, SwimClear C-4520, Pentair Purex CF 105, open w/molded gasket
ULTRA-A3	PA81	C-7483	FC-1225	Hayward SwimClear C3025, C3030, open w/molded gasket
	PA75SV	C-7483	FC-1225	Hayward C-570, SwimClear C3020, Super-Star-Clear C3000, C3000S (stainless steel) Sta-Rite PRC 75, open w/molded gasket
ULTRA-A4	PA56SV	C-7458	FC-1223	Hayward SwimClear C2025
	PCC60	C-7469	FC-1975	Pentair Clean & Clear Plus 240, American Quantum, (4 required)
ULTRA-A5	PCC80	C-7470	FC-1976	Pentair Clean & Clear Plus 320, (4 required)
ULTRA-A6	PCC105	C-7471	FC-1977	Pentair Clean & Clear Plus 420, Waterway Crystal Water
ULTRA-A7	PCC130	C-7472	FC-1978	Pentair Clean & Clear Plus 520
ULTRA-A11	PA55	C-7656	FC-1240	Hayward Easy Clear C550, open w/molded gasket
	PA50	C-7656	FC-1240	Hayward Star-Clear C500, Pentair Purex CF-50, open/w molded gasket
ULTRA-A14	PA40	C-7442	FC-1228	Hayward Easy Clear C400, C-410, open w/molded gasket
ULTRA-B2	PA120	C-8412	FC-1293	Hayward Star-Clear Plus C1200
	PJANCS100	C-8410	FC-0821	Jandy Industries CS 100
	PWWCT125	C-8412	FC-1293	Waterway Clearwater II, Pro-Clean 125 above ground pool cartridge 817-0125N
ULTRA-B3	PJANCS150	C-8414	FC-1287	Jandy Industries CS 150
	PXST150	C-8316	FC-1286	Hayward X-Stream CC1500
	PWWCT150	C-8414	FC-1287	Waterway Clearwater II, Pro-Clean 150 above ground pool cartridge
ULTRA-B4	PA175	C-8417	FC-1294	Hayward Star-Clear Plus C1750, Sta-Rite PXC-175, open w/molded gasket
ULTRA-B6	PA90	C-8409	FC-1292	Hayward Star-Clear Plus C900, Sta-Rite PXC-95 open w/molded gasket
	PA76	C-8411	FC-1256	Hayward C751, Sta-Rite PXC-75 open w/molded gasket
	PXST100	C-8311	FC-1285	Hayward X-Stream CC100, open w/molded gasket
	PWWCT75	C-8411	FC-1256	Waterway Clearwater II Pro-Clean 75 above ground pool cartridge 817-0075N
	PWWCT100	C-8409	FC-1292	Waterway Clearwater II, Pro-Clean 100 above ground pool cartridge 817-0100N
ULTRA-B7	PWWPC150SV	C-8414	FC-1287	Waterway Proclean Inground pool 150 (short version)
	PXST125	C-8311	FC-1285	Upgrade to Hayward X-Stream 100
ULTRA-B8	PA125	C-9499	FC-1299	Hayward ASL Full-Flo C1250, C1500
ULTRA-C1	PA125	C-9405		Predator 50 - Pentair Clean & Clear 50
ULTRA-C3	PAP50	C-9410		Predator 100 - Pentair Clean & Clear 100
ULTRA-C4	PAP150	C-9415	FC-0687	Predator 150 - Pentair Clean & Clear 150
ULTRA-C6	PWW75	C-9401	FC-2960	Waterway Pool 75, Leisure Bay WW-50
ULTRA-C7	PWW100	C-9402	FC-2965	Waterway Pool 100, Leisure Bay WW-100
ULTRA-C8	PWW150	C-9403	FC-2969	Waterway Pool 150, Leisure Bay WW-150
ULTRA-D1	PA100	C-8610	FC-1290	Hayward Star-Clear II C1100, open w/ molded gasket
ULTRA-D2	PA80	C-8600	FC-1280	Hayward Star-Clear II C800 Star-Clear II C1500, open w/molded gasket

All items cataloged are normally stocked unless noted.
◆ Not Stocked ✻ While Supplies Last

Code	New Product Number	Old Product Number	Description
		Universal Valves	
	PRASM10AO	SM-10-AO	**Praher:** All 1½" ports open & threaded, includes 2 plugs. Fits most filters except top-mount type. ABS. (Hayward) SM-10-AO
	HPPSP0710XALL	SP0710XALL	**Hayward**: All 1½" ports open & threaded, includes 2 plugs. Fits most filters except top-mount type. ABS
	PEN261049	261049	**Pentair**: 2" Hi Flow Valve. We recommend this valve because it is a 6-position valve made of PVC and designed for maximum flow - up to 125 GPM. All ports are 2" slip. 261049
	PEN261050	261050	**Pentair:** 2" Hi Flow Valve with plumbing for Triton Sand Filters
	PEN261055	261055	**Pentair**: 2" Multiport Valve for Triton Sand Filters and Quad D.E. Filters. 261050
		Replacement Top-Mount Valves	
✻	HPPSPX07122AA	SPX07122AA	**Hayward:** Body only with gasket & sight glass. SPX07122AA
	PEN262506	262506	**Pentair:** TA Deluxe Valve and Cristal-Flo II Filters. Clamp on type. Includes gauge, O-ring, and clamp. 1½" threaded, 6" Neck 262506
	HPPSP0714T	SP0714T	**Hayward:** Valve for Pro Series or Seablue filters. Clamp-on type (Clamp not included) Includes gauge and O-ring 7 Position, 1½" FIP SP0714T
	HPPSP071620T	SP071620T	**Hayward:** Valve for Pro Series clamp-on type. Includes clamp, gauge & O-ring. 6 Position, 2" SP071620T

All items cataloged are normally stocked unless noted.

Not Stocked ✻ While Supplies Last

Code	New Product Number	Old Product Number	Description
		Replacement Top-Mount Valves (continued)	
	HPPSP071621	SP071621	Valve for Hayward Pro Series 6 Position, 2" FIP
	HPPSP0710X62	SP0710X62	Replacement Side-Mount Valve for Hayward Pro Series Filters. 6 Position, 1½" FIP.
	PEN261186	261186	Top Mount Replacement for Crystal-Flo Filters (2010 & prior) Requires Plumbing modification - original valve no longer available.
	PEN270067	270067	Top Valve Assembly 2"
	PEN270068	270068	Top Valve Assembly 1½"
❋	PRATM12E	TM-12-E	Praher Valve for Sta-Rite Pantera. Bolt on type.
CALL	PRATM12JL	TM-12-JL	Praher - Valve for Jacuzzi Laser Filters. 6 Bolt Pattern - Replaces DVK-4 and DVK-6. (Stocked in Clio Only)
❋	PRATM12A	TM-12-A	**Praher:** Valve for **PacFab** 1991 or older. V-thread screw on type. (Pentair # 261124)

All items cataloged are normally stocked unless noted.
◆ Not Stocked ❋ While Supplies Last

QUALITY POOL SUPPLY

Code	New Product Number	Old Product Number	Description
		Hayward Valve Parts	
		SP-710X Series (1976 - Current)	
	HPPSPX0710XD	SPX0710XD	Valve Seat Gasket, 5 Spoke (Can substitute O-176A)
	AEQO176A	O-176 (Aladdin)	Valve Seat Gasket, 5 Spoke (SPX710XD)
•	HPPSPX0710XF	SPX0710XF	Handle
	HPPSPX0710XZ7	SPX0710XZ7	Handle Pin
•	HPPSPX0710Z16	SPX0710Z16	Non-Metallic Bearing (Pkg. of 5)
■	HPPSPX0714BA	SPX0714BA	Key, Cover & Handle Assembly
■	AQPAPCO2162	O-336	Cover O-ring (SPX0714L)
■	HPPSPX0714L	SPX0714L	Cover O-ring
•	AEQO418KIT	O-418-Kit	O-ring, Shaft Seal (SPX735GA) (2 Required per valve)
	HPPSPX0603S	SPX0603S	Spring
•	HPPSPX0710Z62	SPX0710Z62	Spring Washer (set of 2)
■	HPPSPX0714CA	SPX0714CA	Key/ Seal Assembly
•	HPPSPX0710XC	SPX0710XC	Key/ Stem Assembly
	HPPSPX0710XBA	SPX0710XBA	Key, Cover & Handle Assy-white (Replaces SPX710C)
	HPPSPX0710MA	SPX0710MA	Threaded Sight Glass with Gasket
	HPPSPX0710G	SPX0710G	Decal (label plate)
		SP-710 Series (1969 - 1975)	
	AEQO176A	O-176 (SPX0710D)	Valve Seat Gasket, 6 Spoke
	HPPSPX0715D	SPX0715D	Valve Seat Gasket for SP-715
	HPPSPX0710F	SPX0710F	Handle-metallic
	HPPSPX0710Z7	SPX0710Z7	Handle Pin
	HPPSPX0704D	SPX0704D	Valve Key Gasket for SP-704
	AEQO139	O-139	Cover O-ring (SPX710Z3)
	HPPSPX0603Z2A	SPX0603Z2A	O-ring/Teflon Shaft Seal
		Misc. Valve Parts	
	HPPSPX0710XALLAA	SPX0710XALLAA	Valve Body w/ gasket, sight glass & diffuser
✻	HPPSPX07122AA	SPX07122AA	Top Mounted threaded body
	PRAE12S1	E-12-S1	Spider gasket for 1½" Praher Side Mount Valves
	PRAE12S2	E-12-S2	Spider gasket for 2" Praher Side Mount Valves
	HPPSPX0710Z9	SPX0710Z9	Adhesive for valve seat gasket (5 oz.)
	AQPAPCK1002	GK10	Hayward 5-Spoke Multiport (SP710X and SP712 After 1976)
	AQPAPCK1003	GK11	Hayward 6-Spoke Multiport (SP-710/711) 1969-1975

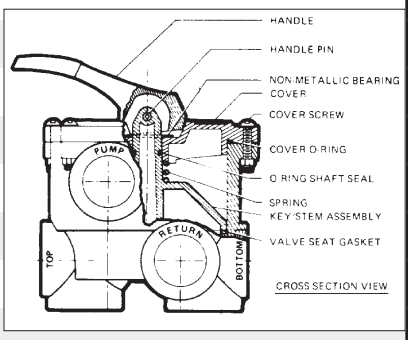

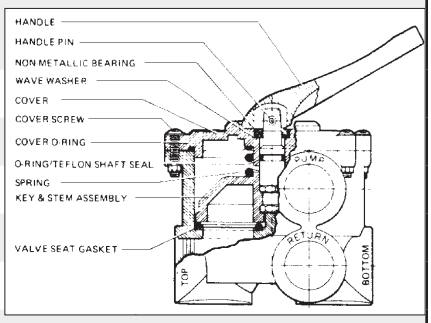

All items cataloged are normally stocked unless noted.
Not Stocked ✻ While Supplies Last • Also used on SP0714T Valve ■ Used ONLY SP0714T Valve

NOTES

QUALITY POOL SUPPLY

HAYWARD

S200 Sand Filter

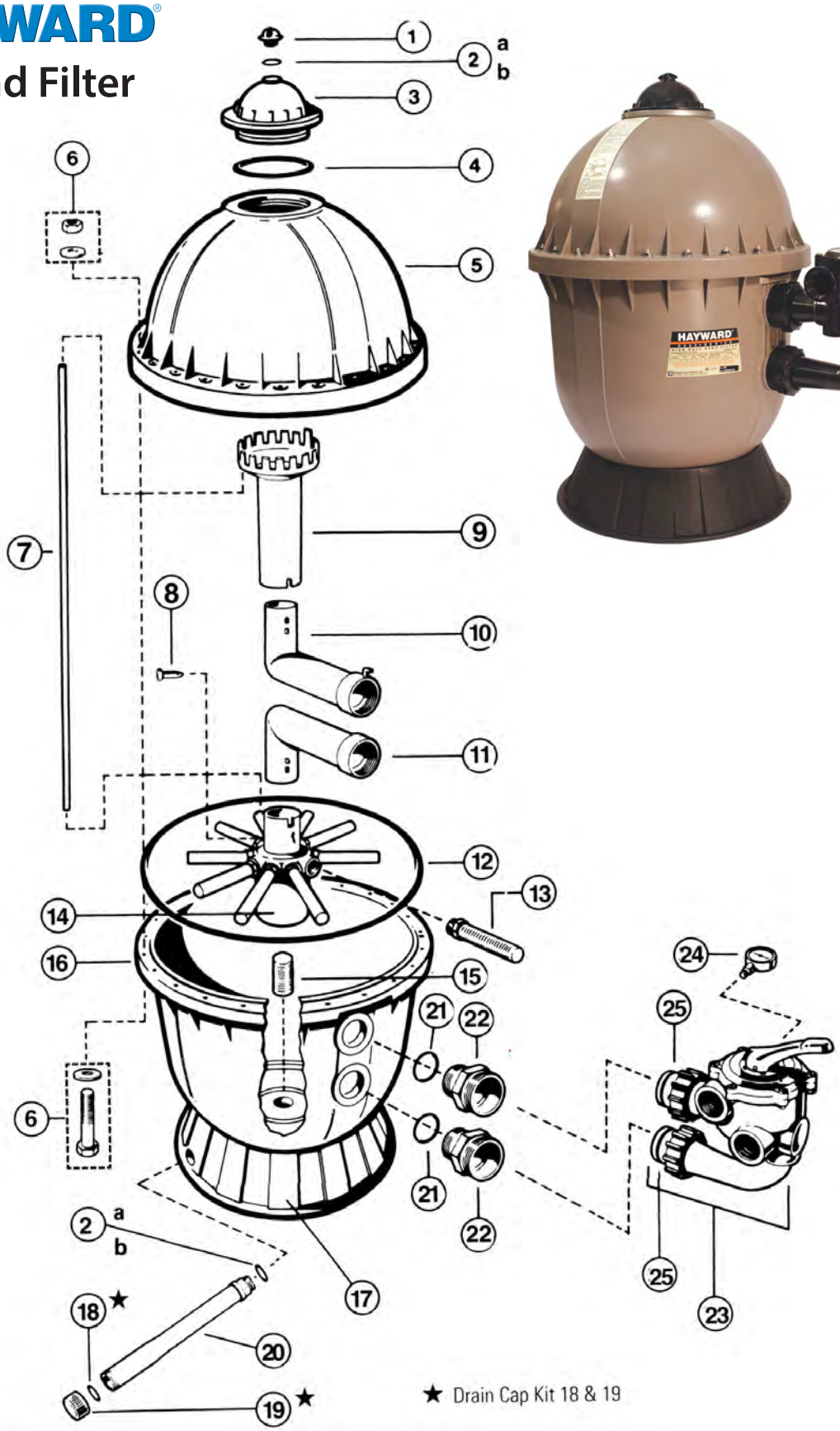

All items cataloged are normally stocked unless noted.

Not Stocked ✻ While Supplies Last

Code	New Product Number	Old Product Number	Description	
HAYWARD		S200 Sand Filter		
	HPPSX200G	SX200G	1	Manual air relief valve
	HPPSX200Z5	SX200Z5	2a	Air relief valve O-ring Before 1980 (can sub O-27)
	AEQO27	O-27	2a	Air relief valve O-ring Before 1980
	HPPSX200Z14	SX200Z14	2b	Air relief valve O-ring after 1980 (can sub O-27)
	HPPSX200K	SX200K	3	Access cover
	AEQO284	O-284	4	Access cover O-ring
	HPPSX200BT	SX200BT	5	Filter tank head top
	HPPECX1642A	ECX1642A	6	Head bolt kit - includes bolt, nut and washer
	HPPSX200Z1	SX200Z1	7	Plastic air tube
	HPPSX200Z2	SX200Z2	8	Air tube lock screw
	HPPSX200L	SX200L	9	Top diffuser
	HPPSX200C	SX200C	10	Internal diffuser elbow pipe - top
	AEQO103	O-103	12	Tank O-ring (Hayward # SX200Z7)
	HPPSX200QNPAK10	SX200QN	13	Lateral
	HPPSX202QA	SX202QA	14	Lateral holder assembly (replaced SX200MA)
	HPPSX200H	SX200H	15	Bottom screen
◆	HPPSX200AA1T	SX200AA1T	16	Filter tank bottom with drain assembly less skirt
◆	HPPSX200J	SX200J	17	Filter support stand (skirt)
	HPPSX200Z8A	SX200Z8A	19	Drain cap kit - cap and O-ring
	HPPSX200EB	SX200EB	20	Drain pipe assembly - includes drain cap kit
	HPPSX200Z3	SX200Z3	21	Bulkhead fitting O-ring (can sub O-43)
	AEQO43	O-43	21	Bulkhead fitting O-ring
	HPPSX200D	SX200D	22	Bulkhead fitting
	HPPSPX0710X32	SPX0710X32	23	Vari-Flo valve assembly (can sub SM1-HP3)
	PRASM1HP3	SM1-HP3	23	Vari-Flo valve assembly (made by Praher)
	HPPSPX0710X32AA	SPX0710X32AA		Vari-Flo valve body
	HPPECX270861	ECX270861	24	Pressure gauge
	HPPSX200Z4	SX200Z4	25	Valve-to-bulkhead O-ring (can sub O-64)
	AEQO64	O-64	25	Valve-to-bulkhead O-ring
	HPPS200KT	S200KT		Dome wrench
		S200 System PAKs		
	HPPSPX1105Z4	SPX1105Z4	Elbow hose adapter 1-½" for S200PAK1	
	HPPSPX1091Z2PAK2	SPX1091Z2	Straight hose adapter 1-½" for S200PAK1	
	HPPSPX1480C	SPX1480C	Union nut for PAK2 and 3 and System II	
	AEQO49	O-49	Valve to union O-ring for PAK2 and 3 and System II	
	HPPSPX1485B3	SPX1485B3	Union elbow assembly for PAK2 and 3 and System II	
	AEQO341	O-341	Compression gasket for PAK2 and 3 and System II	
	HPPECX1109	ECX1109	Washer 5⁄16" for PAK2 and 3 and System II	
	HPPSPX1485DA	SPX1485DA	Compression fitting assembly for PAK2 and 3 and System II	

All items cataloged are normally stocked unless noted.
◆ Not Stocked ✻ While Supplies Last

QUALITY POOL SUPPLY

HAYWARD

S240 Sand Filter

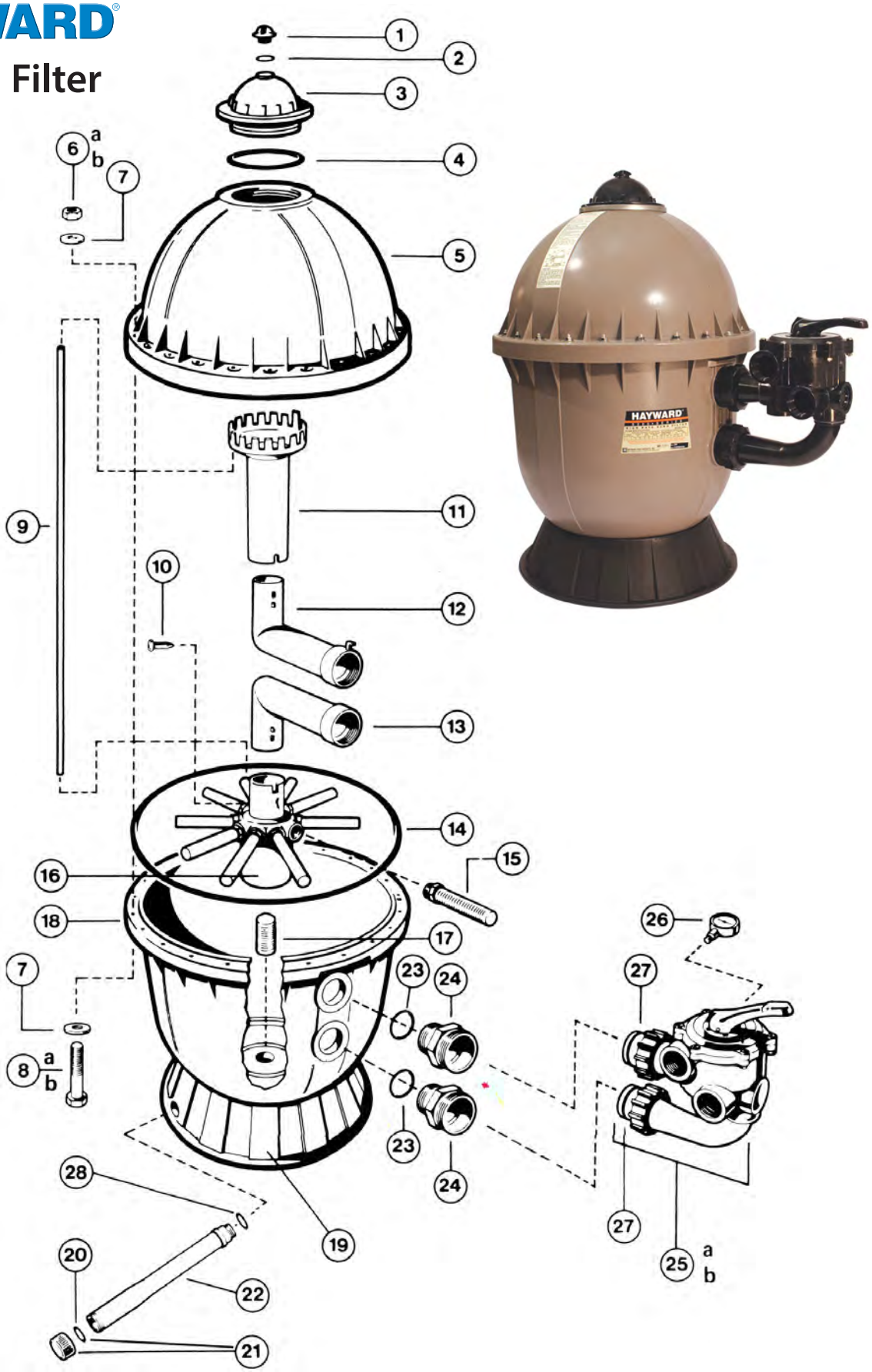

All items cataloged are normally stocked unless noted.

Not Stocked ✻ While Supplies Last

Code	New Product Number	Old Product Number	Description	
	HAYWARD	S240 Sand Filter		
	HPPSX200G	SX200G	1	Manual air relief valve
	HPPSX200Z5	SX200Z5	2a	Air relief valve O-ring before 1980 (can sub O-27)
	AEQO27	O-27	2a	Air relief valve O-ring before 1980
	HPPSX200Z14	SX200Z14	2b	Air relief valve O-ring after 1980
	HPPSX200K	SX200K	3	Access cover
	AEQO284	O-284	4	Access cover O-ring
	HPPSX240Z3	SX240Z3	8a	Hex head bolt - ¼"-20 x 2"
✻	HPPSX240Z4	SX240Z4	8b	Hex head bolt - ¼"-20 x 3"
	HPPSX240Z2	SX240Z2	9	Plastic air tube
	HPPSX200Z2	SX200Z2	10	Air tube lock screw
	HPPSX200L	SX200L	11	Top diffuser
	HPPSX240C	SX240C	12/13	Internal diffuser elbow pipe (top or bottom)
	HPPSX240Z1	SX240Z1	14	Tank O-ring
	HPPSX240DNPAK10	SX240DN	15	Lateral
	HPPSX242DA	SX242DA	16	Folding umbrella lateral holder assembly
	HPPSX200H	SX200H	17	Bottom screen
◆	HPPSX200J	SX200J	19	Filter support stand (skirt)
	HPPSX200Z8A	SX200Z8A	20-21	Drain cap kit - cap and O-ring
	HPPSX200EB	SX200EB	20-22	Drain pipe assembly - includes drain cap kit
	HPPSX200Z3	SX200Z3	23	Bulkhead fitting O-ring (can sub O-43)
	AEQO43	O-43	23	Bulkhead fitting O-ring
	HPPSX200D	SX200D	24	Bulkhead fitting
	HPPSPX0710X32	SPX0710X32	25a	Vari-Flo valve assembly (can sub SM1-HP3)
	PRASM1HP3	SM1-HP3	25a	Vari-Flo valve assembly (made by Praher)
	HPPSPX0710X32AA	SPX0710X32AA		Vari-Flo valve body
	HPPSPX0715X32	SPX0715X32	25b	Vari-Flo valve assembly - 2"
	HPPECX270861	ECX270861	26	Pressure gauge
	HPPSX200Z4	SX200Z4	27	Valve-to-bulkhead O-ring (can sub O-64)
	AEQO64	O-64	27	Valve-to-bulkhead O-ring
	HPPS200KT	S200KT		Dome wrench

All items cataloged are normally stocked unless noted.
◆ Not Stocked ✻ While Supplies Last

QUALITY POOL SUPPLY

HAYWARD

Perflex EC-65 / EC-75

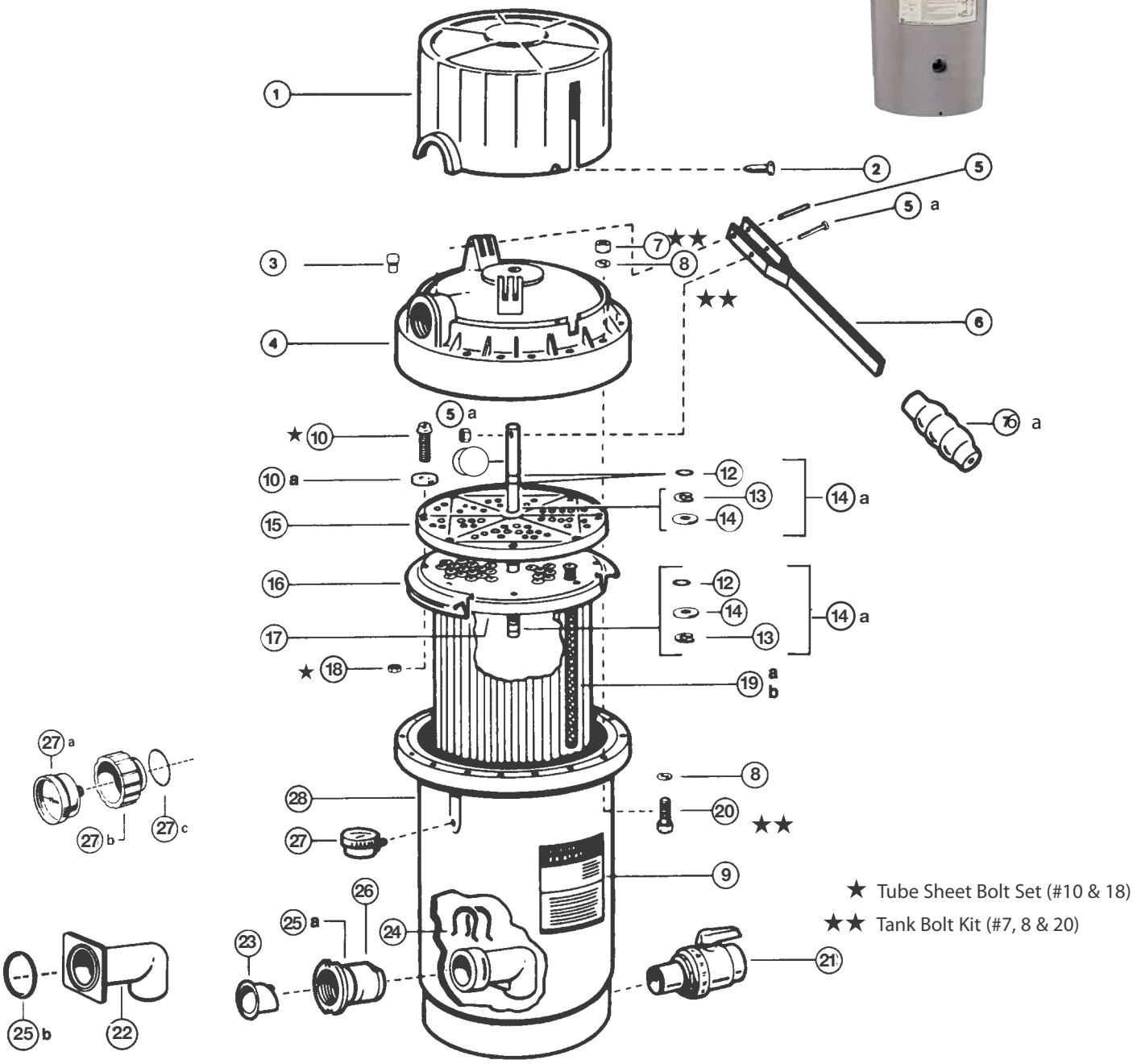

All items cataloged are normally stocked unless noted.

Not Stocked ✻ While Supplies Last

HAYWARD Perflex EC-65 / EC-75

Code	New Product Number	Old Product Number	Key	Description
	HPPECX1322A	ECX1322A	3	Vent Valve (threaded) with O-ring
	HPPECX11194AT	ECX11194AT	4	Filter Head w/New Vent Valve
	HPPECX1013	ECX1013	5	Pivot Pin
	HPPECX1040	ECX1040	6	Bump Handle Assembly (pin, shoulder screw, nut)
	HPPECX1037B	ECX1037B	6a	Bump Handle Grip
	HPPECX1641125	ECX1641125	10a	No. 10 Flat Washer
	HPPECX1110	ECX1110	11	Bump Shaft
	AQPAPCO2454	O-30	12	O-ring, ECX9611246
	HPPECX1014PAK2	ECX1014	13	Retainer
	HPPECX1011	ECX1011	14	Thrust Washer
	HPPECX1014A	ECX1014A	14a	Shaft Kit - O-ring, retainer, washer (#'s 12,13,14)
	HPPECX1104	ECX1104	15	Tube Sheet (Top)
	HPPECX1105	ECX1105	15	Diaphragm Gasket
	HPPECX1103	ECX1103	17	Tube Sheet (Bottom)
	HPPSPX1500Y1	SPX1500Y1	18	Tube Sheet Nut (SPX1500NYA)
	HPPECX1031PAK5	ECX1031	19a	Flex-Tube Assembly 13-⅜" Long (EC65)
	HPPECX1032PAK10	ECX1032	19b	Flex-Tube Assembly 16-¼" Long (EC75)
	HPPSP0723	SP0723	21	Ball Type Drain Valve
	HPPECX4220A	ECX4220A	22	Elbow Assembly with check valve
	HPPECX4077B1	ECX4077B1	23	Check Valve
	HPPECX4212A	ECX4212A	24	Retainer 1989 And Prior
	AEQO49	O-49	25a	O-ring 1989 And Prior (SPX1425Z6)
	AEQO128	O-128	25b	O-ring (1990) SPX1500W
	HPPECX4201CA	ECX4201CA	26	Inlet Fitting
	HPPECX270861	ECX270861	27	Pressure Gauge Boxed
	HPPECX27091	ECX27091	27a	Pressure Gauge, Back Mount
	HPPECX12866	ECX12866	27b	Gauge/Port Adapter
	HPPECX1287	ECX1287	27c	Adapter O-ring
	HPPSPX1500NYA	SPX1500NYA		Tube Sheet Bolt Set
	HPPECX1642A	ECX1642A		Head Bolt Kit (includes one of 7, two of 8, one of 20)

QUALITY POOL SUPPLY

Code	New Product Number	Old Product Number	Description	

HAYWARD®

Perflex EC-30 / EC-40

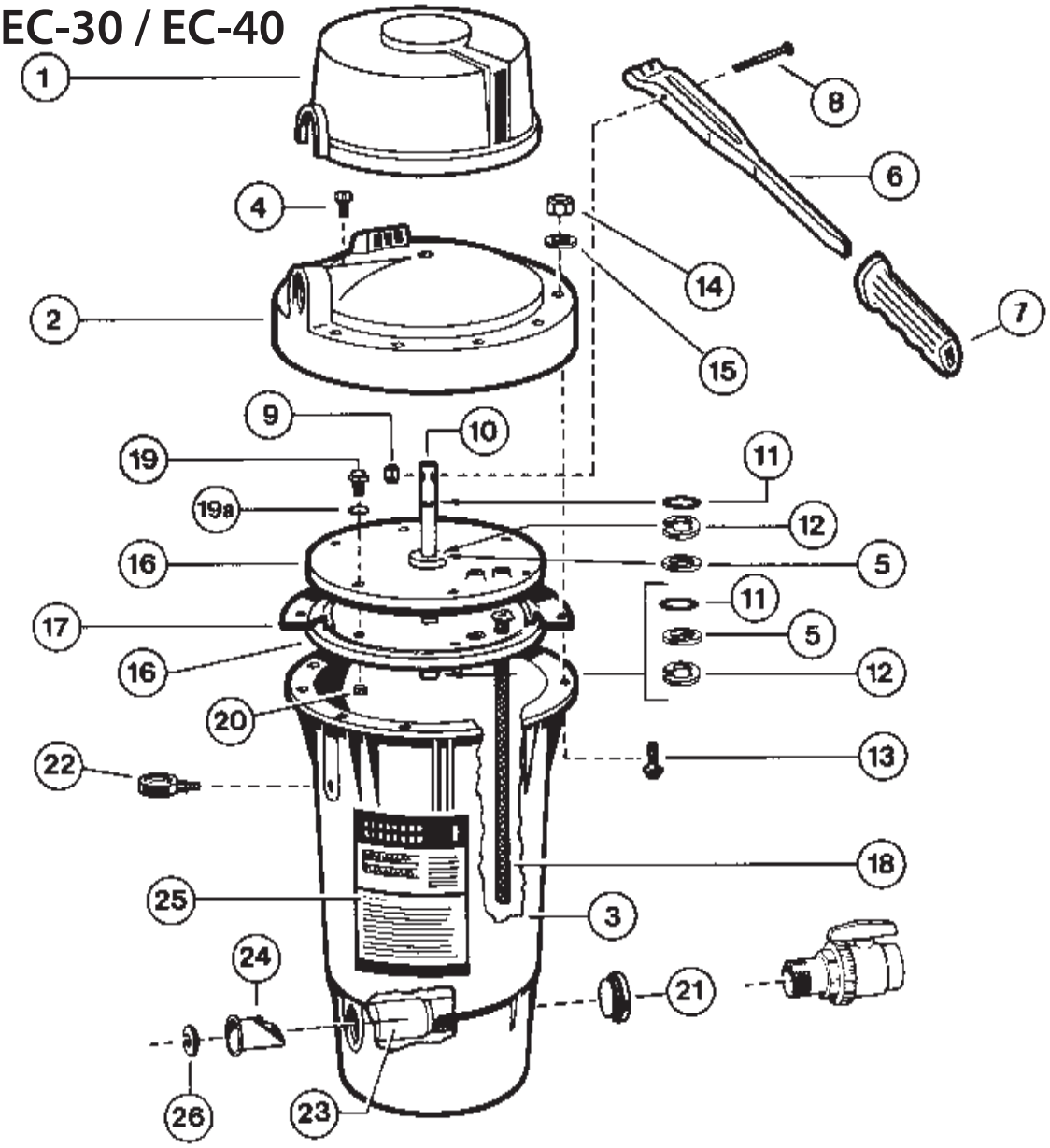

	HPPECX1037A	ECX1037A	6	Bump Handle for EC30
	HPPECX1040	ECX1040	6	Bump Handle for EC40 and EC40AC
	HPPECX1037B	ECX1037B	7	Bump Handle Grip
	HPPECX1009	ECX1009	10	Bump Shaft ½" for EC30 and EC40
◆	HPPECX5000F	ECX5000F	10	Bump Shaft for EC40AC
	HPPECX1038	ECX1038	16	Tube Sheet, (top or bottom)
	HPPECX1039	ECX1039	17	Diaphragm Gasket for EC30
	HPPECX1003	ECX1003	17	Diaphragm Gasket for EC40
	HPPECX5000G	ECX5000G	17	Diaphragm Gasket for EC40AC
	HPPECX1256	ECX1256	23	Flow Diffuser with Check Valve
	HPPECX1055	ECX1055	26	Flow Control

All items cataloged are normally stocked unless noted.

Not Stocked ✻ While Supplies Last

HAYWARD®

Perflex EC-50

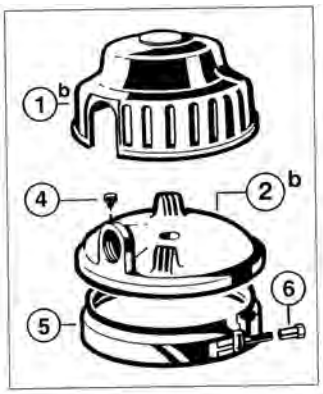

★ Bump Handle Screw Kit
★★ Filter Head Screw Kit
★★★ Tube Sheet Hex Screw Set

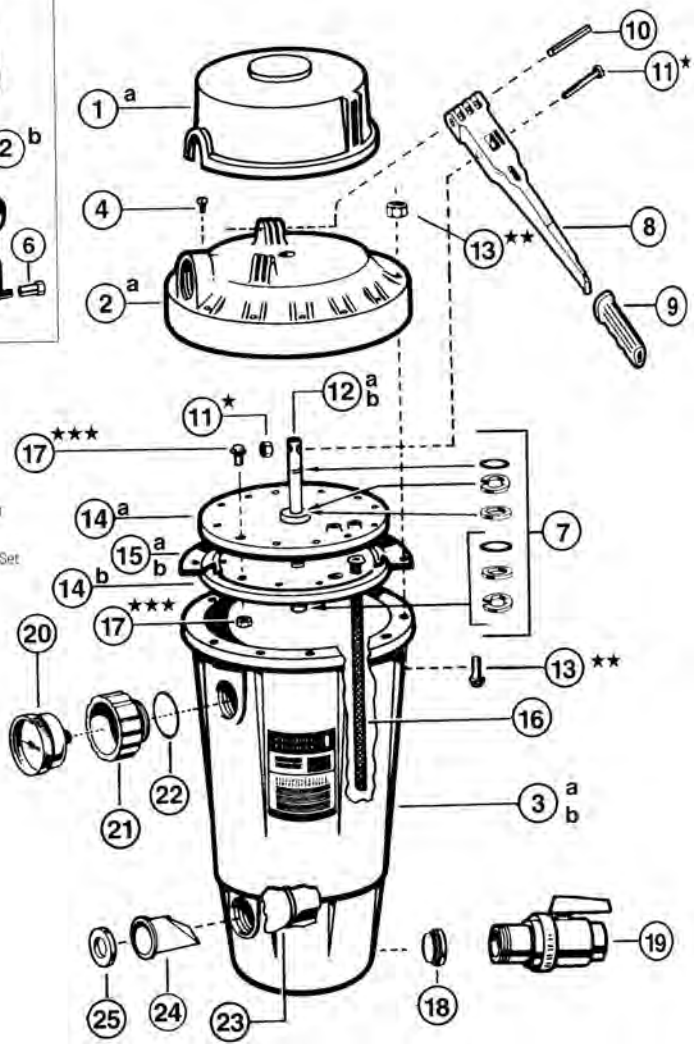

Code	New Product Number	Old Product Number	Description	
	HPPECX1322A	ECX1322A	4	Air relief valve with O-ring
	HPPECX1014A	ECX1014A	7	Bump shaft kit - O-rings, retainers, washers
	HPPECX1040	ECX1040	8	Bump handle assembly
	HPPECX1037B	ECX1037B	9	Bump handle grip
	HPPECX1009	ECX1009	12	Bump shaft 1/2" (EC50A)
	HPPECX1004A	ECX1004A	14a	Tube sheet top
	HPPECX1004	ECX1004	14b	Tube sheet bottom
	HPPECX1003	ECX1003	15	Diaphragm gasket (EC50A)
	HPPECX1032PAK10	ECX1032	16	Flex-tube assembly
	HPPSPX1500NYA	SPX1500NYA	17	Tube sheet bolt set
	HPPSP1022C	SP1022C	18	Winter plug 1½" with O-ring
	HPPSP0723	SP0723	19	Ball-type drain valve
	HPPECX27091	ECX27091	20	Pressure gauge - back mount
	HPPECX12866	ECX12866	21	Gauge/inspection port adapter
	HPPECX1287	ECX1287	22	O-ring for gauge adapter
	HPPECX1256	ECX1256	23	Flow diffuser with check valve
	HPPECX4077B1	ECX4077B1	24	Check valve

All items cataloged are normally stocked unless noted.
◆ Not Stocked ✻ While Supplies Last

QUALITY POOL SUPPLY

HAYWARD®

X Stream Filtration Series

XStream

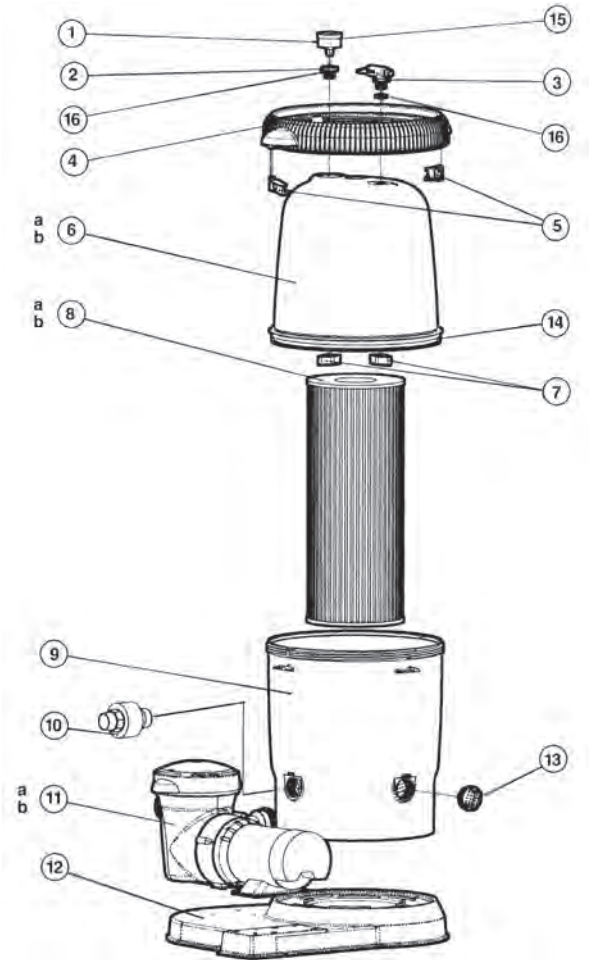

Code	New Product Number	Old Product Number	Description	
	HPPECX2709A1	ECX2709A1	1	Pressure Gauge
	HPPCCX1000L	CCX1000L	2	Threaded Adapter for Pressure Gauge
	HPPCCX1000V	CCX1000V	3	Air Relief Assembly with O-ring
	HPPCCX1000D	CCX1000D	4	Lock Ring Assembly w/2 Safety Clips
	HPPCCX1000H	CCX1000H	5	Safety Clips for Lock Ring
	HPPCCX1000C	CCX1000C	6a	Filter Lid w/ Lock ring - 100 sq. ft.
	HPPCCX1500C	CCX1500C	6b	Filter Lid w/ Lock ring - 150 sq. ft.
	HPPCCX1000N	CCX1000N	7	Adapter Nut (set of 2)
	UNFC8311	C-8311	8a	100 sq. ft. Element
	UNFC8316	C-8316	8b	150 sq. ft. Element
	HPPCCX1000B	CCX1000B	9	Filter Lower Body
	HPPSP1480BLK	SP1480BLK	10	Self Aligning Union - Black
	HPPSP1592	SP1592	11a	1 HP Matrix Pump
	HPPSP1593	SP1593	11b	1.5 HP Matrix Pump
	HPPCCX1000A	CCX1000A	12	Standard Base
	HPPSP1022CBLK	SP1022CBLK	13	Threaded Drain Plug w/ O-ring 1½" - Black
	HPPCCX1000G	CCX1000G	14	Body O-ring
	HPPSPX1500W	SPX1500W	15	Pressure Gauge O-ring (can substitute O-128)
	AEQO128	O-128	15	Pressure Gauge O-ring
	HPPCCX1000Z5	CCX1000Z5	16	O-ring for Gauge Adapter and Air Relief

All items cataloged are normally stocked unless noted.

Not Stocked ✻ While Supplies Last

Code	New Product Number	Old Product Number		Description
HAYWARD		**Micro Star Filters C-120, C-200, C-225**		
	HPPCX120AA	CX120AA	1	Filter Head with Vent Valve
	AQPAPCO2157	O-330	2	O-ring (CX120D)
	UNFC4320	C-4320	3a	Cartridge Element 20 sq. ft.
	UNFC4325	C-4325	3c	Cartridge Element 25 sq. ft.
	HPPCX120B	CX120B	4	Filter Housing Body
	HPPECX1322A	ECX1322A	5	Air Relief Valve with O-ring
	AEQO341	O-341	6	Gasket (SPX1485C)
	HPPS200KT	S200KT		Wrench For Body Housing
	HPPCX250F	CX250F		Filter Head Gasket (Star Clear)
		S-190T & S-245T		
	HPPSP0714T	SP0714T	1	Vari-Flo Control Valve Assembly
	HPPECX270861	ECX270861	2	Pressure Gauge
	HPPGMX600F	GMX600F	3	Valve/Tank O-ring (Can substitute O-263)
	AQPAPCO2441	O-263	3	Valve/Tank O-ring
	HPPGMX600N	GMX600N	4	Flange Clamp
	HPPSX200QPAK10	SX200Q	8	Lateral for S-190T
	HPPSX240DPAK10	SX240D	8	Lateral for S-245T
	HPPSX200EB	SX200EB	9	Drain Pipe Assembly
	AQPAPCO2226	O-398	10	O-ring
				1" O.D. 1980 Thru Present (SX200Z14)
	HPPSX200Z8A	SX200Z8A	11-12	Drain Cap Kit with gasket
		S-164T & S-166T		
	HPPSP0714T	SP0714T	1	Valve
	HPPECX270861	ECX270861	2	Pressure Gauge
	HPPGMX600F	GMX600F	3	Valve/Tank O-ring
				(Can substitute O-263)
	AQPAPCO2441	O-263	3	Valve/Tank O-ring,
	HPPGMX600NM	GMX600NM	4	Flange Clamp
	HPPSX164DA	SX164DA	6	Lateral Assembly w/center pipe
	HPPSX200QPAK10	SX200Q	8	Lateral
	HPPSX180HG	SX180HG	9 & 10	Drain Cap Kit
		Lateral Assemblies		
	HPPSX180DA	SX180DA		Lateral Assembly for S-180T
	HPPSX210DA	SX210DA		Lateral Assembly for S-210T
				(Can also be used for S-190T. Cut center pipe to length.)
	HPPSX220DA	SX220DA		Lateral Assembly for S-220T
	HPPSX244DA	SX244DA		Lateral Assembly for S-244T

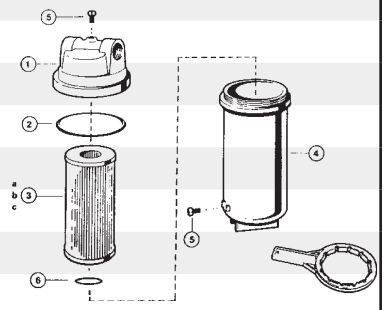

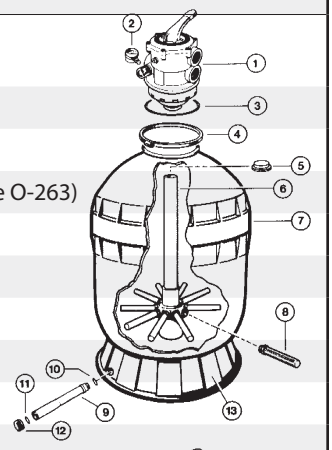

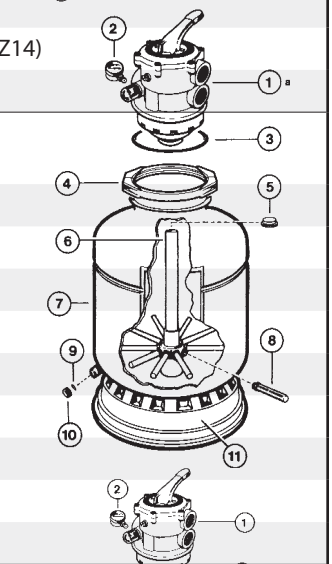

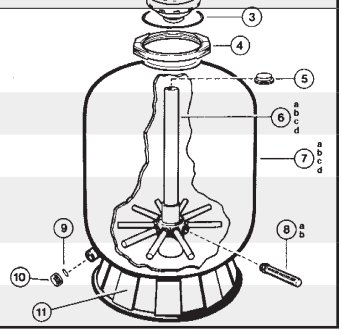

All items cataloged are normally stocked unless noted.
◆ Not Stocked ✻ While Supplies Last

QUALITY POOL SUPPLY

PENTAIR

Tagelus Parts

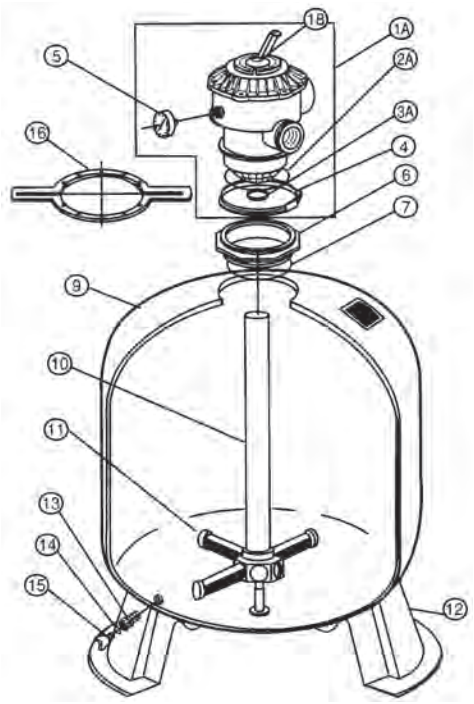

Code	New Product Number	Old Product Number	Key	Description
	PEN262506	262506	1A	Clamp on valve
	PEN272541	272541	2A	Valve O-ring
	AEQO287	O-287	3A	O-ring for stand pipe 155064 - Aladdin
	PEN155064	155064	3A	O-ring for stand pipe - Pentair
	PEN152165	152165	4	Clamp 6.5"
CALL	PEN152130	152130	4	Clamp 8.35"
	AMGEIPPG6024BNL	155050	5	Pressure Gauge - Backmount (Generic)
	PEN190059	190059	5	Pressure Gauge - Backmount (Pentair)
◆	PEN155060	155060	10	Center piping & Hub, TA-30, 30D
CALL	PEN155061	155061	10	Center piping & Hub, TA-40, 40D
	PEN155062	155062	10	Center piping & Hub, TA-50, 50D
	PEN155063	155063	10	Center piping & Hub, TA-60, 60D
	PEN155007	155007	11	Lateral 30, 30D, 35, 35D
	PEN152290	152290	11	Lateral 40, 40D, 50, 50D, 60, 60D
	PEN150085	150085	11	Lateral for Models after 2007
CALL	PEN154926	154926	12	Tank Foot Models Mfg. After Nov. 1, 1991
◆	PEN154596	154596	12	Tank Foot
	PEN154685	154685	13	Drain For Filters Built before 1983 (½")
	PEN154698	154698	13	Drain For Filters built after 1983 (¾")
	AQPAPCO2395	O-130	14	Drain Plug O-ring 192115 - Aladdin
	PEN192115Z	192115	14	Drain Plug O-ring - Pentair
	PEN357161Z	357161	15	Drain Plug, ¼" thread
	PEN154512	154512	16	Wrench 6½" across flats
CALL	PEN272599	272599	18	Label top mount valve

All items cataloged are normally stocked unless noted.

Not Stocked ✻ While Supplies Last

PENTAIR
Sand Dollar®

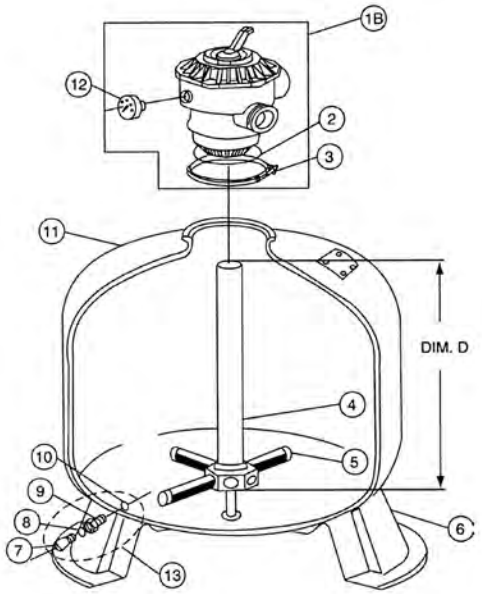

Code	New Product Number	Old Product Number	Key	Description
	PEN262506	262506	1B	Valve 1-½ in. 6-way
	PEN272541	272541	2	O-ring valve body
	PEN152165	152165	3	Assembly, plastic clamp 2 piece
◆	PEN155504	155504	4	Piping assembly SD35, dim D = 16 in.
CALL	PEN152229	152229	4	Pipe assembly SD35 (Filters manufactured after 10/04)
	PEN155062	155062	4	Piping assembly SD40, dim D = 20⅛ in.
	PEN152228	152228	4	Pipe assembly SD40 (Filters manufactured after 10/04)
◆	PEN155532	155532	4	Piping assembly SD60, dim D = 25¼ in.
	PEN152227	152227	4	Pipe assembly SD60 (Filters manufactured after 10/04)
	PEN152226	152226	4	Pipe assembly SD80
	PEN155007	155007	5	Lateral 5, 11/32 in. long SD35, 8 req.
	PEN152290	152290	5	Lateral 6, 11/16 in. long SD40/SD60, 8 req.
	PEN150084	150084	5	Lateral, SD35, SD40 (Filters manufactured after 10/04)
	PEN150085	150085	5	Lateral XLong, SD60, SD80 (Filters manufactured after 10/04)
	PEN154926	154926	6	Foot, SD35
	PEN154520	154520	6	Foot, SD40 & SD60, SD80 (Used on filters manufactured before 2/02)
	PEN357161Z	357161	7	Plug, ¼ in. NPT drain
	PEN192115Z	192115	8	O-ring drain plug
	PEN154713	154713	10	Gasket, sand drain (Used on filters manufactured before 2/02)
◆	PEN145339	145339	11	Tank filter SD35, almond
◆	PEN145341	145341	11	Tank filter SD40, almond
◆	PEN145343	145343	11	Tank filter SD60, almond
◆	PEN145334	145334	11	SD80 Tank
	AMGEIPPG6024BNL	155050	12	Gauge, Pressure - Backmount (Generic)
	PEN190059	190059	12	Gauge, Pressure - Backmount (Pentair)
◆	PEN150055	150055PEN	13	Drain plug assembly 80
	PEN154712Z	154712	-	1½ in. drain cap
	PEN154715	154715	-	O-ring for drain cap

All items cataloged are normally stocked unless noted.
◆ Not Stocked ✻ While Supplies Last

QUALITY POOL SUPPLY

STA-RITE

Cristal-Flo II High-Rate Sand Filters

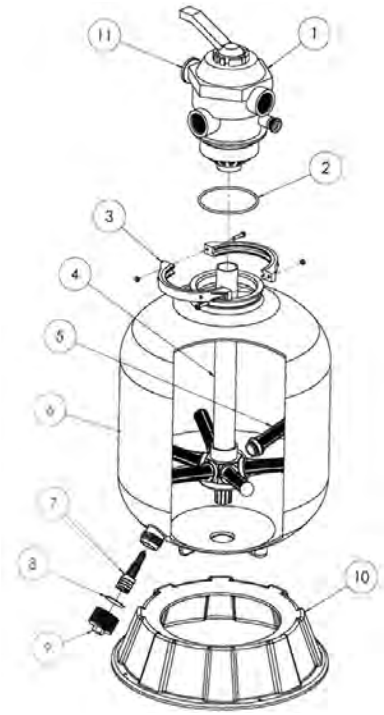

Code	New Product Number	Old Product Number	Key	Description
	PEN262506	262506	1	Valve, 1-½" 6-way
	PEN262525	262525	1	Valve, 2" with Unions
	PEN272541	272541	2	O-ring valve body
	PEN152165	152165	3	Clamp assemble
	PEN152229	152229	4	Piping assembly - 16" tank
	PEN152228	152228	4	Piping assembly - 19" tank
	PEN152227	152227	4	Piping assembly - 22" tank
	PEN152226	152226	4	Piping assembly - 26" tank
	PEN152238	152238	4	Piping assembly - 26" tank with 2" valve
	PEN150084	150084	5	Lateral - 16" and 19" tanks
	PEN150085	150085	5	Lateral - 22", 24" and 26" tanks
CALL	PEN145364	145364	6	Tank with drain - 16" tank
◆	PEN145365	145365	6	Tank with drain - 19" tank
◆	PEN145366	145366	6	Tank with drain - 22" tank
◆	PEN145369	145369	6	Tank with drain - 24" tank
◆	PEN145370	145370	6	Assembled tank with drain - 26" tank
	PEN154711	154711	7	Sand Drain
	PEN154715	154715	8	Gasket (Sand Drain)
	PEN154712Z	154712	9	Drain Cap
	PEN154926	154926	10	Foot, 16" Tank
	PEN154520	154520	10	Foot, 19", 22", 24", and 26" tanks
	PEN190059	190059	11	Pressure gauge

All items cataloged are normally stocked unless noted.

Not Stocked ✻ While Supplies Last

STA-RITE

Top-Mount Filter Parts

Cristal-Flo Filter Parts

Code	New Product Number	Old Product Number	Key	Description
	PENWC137519P	WC137-519P	2	Collector Hub for T-200BP, 240BP, JSAL20E
	PEN246000003	24600-0003	3	Lateral Tube for T-170BP, T-200BP
	PEN247000075	24700-0075	3	Lateral Tube for T-240BP
	PENWC1987A	WC19-87A	5	V-Clamp
	PENWC3622	WC36-22	7	Clamp Knob
	PEN246000003	24600-0003	8	Drain Lateral Tube
	PENU9370	U9-370	9	O-ring, Lateral Tube
	PENU9371	U9-371	10	O-ring, Drain Cap
	PEN149650025	14965-0025	11	Drain Cap
	PENU9369	U9-369	12	O-ring, Tank Flange

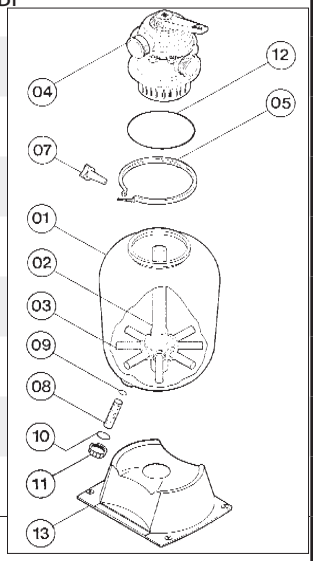

Cristal-Flo Valve Parts

Code	New Product Number	Old Product Number	Key	Description
	PEN149620032	14962-0032	1	Handle
	PEN358570021	35857-0021	2	Dowel Pin
	PEN149650007	14965-0007	3	Washer
	AQPAPCO2418	O-225	4	O-ring, Handle (35505-1228)
	PEN149650006	14965-0006	5	Spring
	PEN149650007	14965-0007	6	Washer
	PEN149650028	14965-0028	7	Plug & Gasket Assembly
✻	PEN370670714	37067-0714	9	Screw
	AEQO299	O-299	10	O-ring, Cover (35505-1275)
	PEN354070071	35407-0071	11	Nut
	PENU9369	U9-369	13	O-ring, Tank Flange
	PENU11182PM	U11-182PM		Union Collar (not shown)
	PENU11183PM	U11-183PM		Union Adapter (not shown)

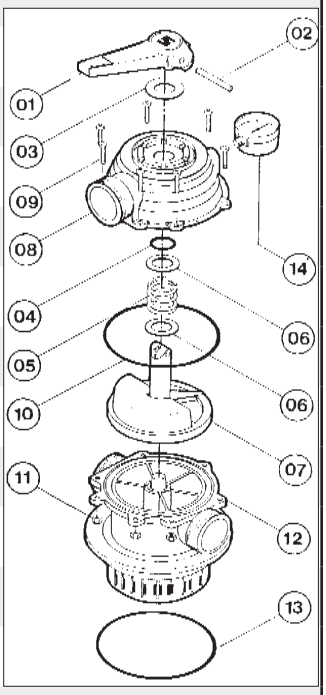

All items cataloged are normally stocked unless noted.
◆ Not Stocked ✻ While Supplies Last

QUALITY POOL SUPPLY

Code	New Product Number	Old Product Number	Key	Description
PENTAIR		**2" Hi-Flow Valve** (261049, 261050, 261142)		
	PEN272422	272422		Top Assembly, (items 1 thru 9)
	PEN272520	272520	1	Handle (replaces 272411)
	PEN272405	272405	2	Screw
	PEN272402	272402	3	Washer
	PEN272412	272412	4	Top
	PEN272401	272401	5	Washer SS
	PEN272400	272400	6	Spring
	AQPAPCO2305	O-47	7	O-ring (shaft) 272406
	PEN272413	272413	8	Diverter
	PEN272409	272409	9	Seal (pie shaped gasket)
	PEN98211400	98211400	10	Nut
	PEN272415	272415	11	Bottom plate 2"
	PEN154566	154566		Sight Glass
		2" Slide Valve (261165)		
	PEN273090	273090		O-ring (shaft)
	PEN273062	273062		O-ring
	PEN273063	273063		Pin
	PEN273089	273089		Handle
	PEN273241	273241		Piston Rod Assembly
STA-RITE		**WC112-148 Valve** (Fits all Crystal-Flo Filters)		
	PEN149620032	14962-0032	2	Handle
	PEN358570021	35857-0021	3	Dowel Pin
	PEN149650007	14965-0007	4	Washer
	PEN149650011S	14965-0011S	7	Valve Cover (replacing 14965-0011)
	AQPAPCO2418	O-225	8	O-ring (35505-1228)
	PEN149650007	14965-0007	9A	Washer
	PEN149650007	14965-0007	9B	Washer
	PEN149650006	14965-0006	10	Spring
	PEN336000023T	33600-0023T	11	Gauge, Pressure
	PEN149650028	14965-0028	12	Plug and Gasket Assembly
	AEQO299	O-299	13	O-ring, Cover (35505-1275)
	PEN261186	261186	14	Valve Body Replacement Valve
	PEN354070071	35407-0071	15	Nut
	PENU9369	U9-369	16	O-ring, Tank Flange
	PENWC11987	WC119-87		Clamp Assembly
	PEN777040104	77704-0104		Plug and Cover Assembly

All items cataloged are normally stocked unless noted.

Not Stocked ✻ While Supplies Last

Code	New Product Number	Old Product Number	Description
STA-RITE		**Vertical D.E. Parts** (Byron Center Only)	
	AEQO87	O-87	O-ring for Clamp, U9-145
	AEQO92	O-92	O-ring, U9-160
	AQPALL	O-24	O-ring, outlet elbow (Replaces Pentair 192323 and Hayward DEX2400Z5)
	UNFS0175	S-0175	Grid Assembly (WC208-13)
Aladdin		**Spin D.E. Parts**	
	AEQO26	O-26	O-ring (Hub), U9-154
	AQPAPCO2022	O-147	O-ring for Drive Shaft, U9-158
PENTAIR		**Slide Valve Parts** (Valve #263064)	
	PEN270141	270141	1 Block Nut
	PEN273062	273062	2 O-ring
	PEN51005000	51005000	3 O-ring - EPDM
	PEN263055	263055	4 Piston Kit Assembly
	PEN270134	270134	5 Handle
	PEN273063	273063	6 Pin
	PEN6020006	6020006	7 O-ring

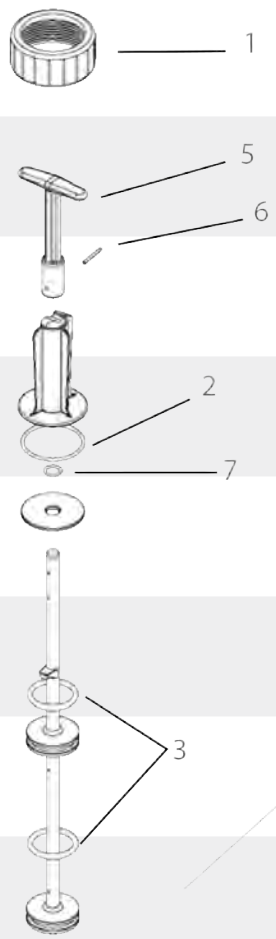

All items cataloged are normally stocked unless noted.
◆ Not Stocked ✻ While Supplies Last

QUALITY POOL SUPPLY

PENTAIR

Triton II

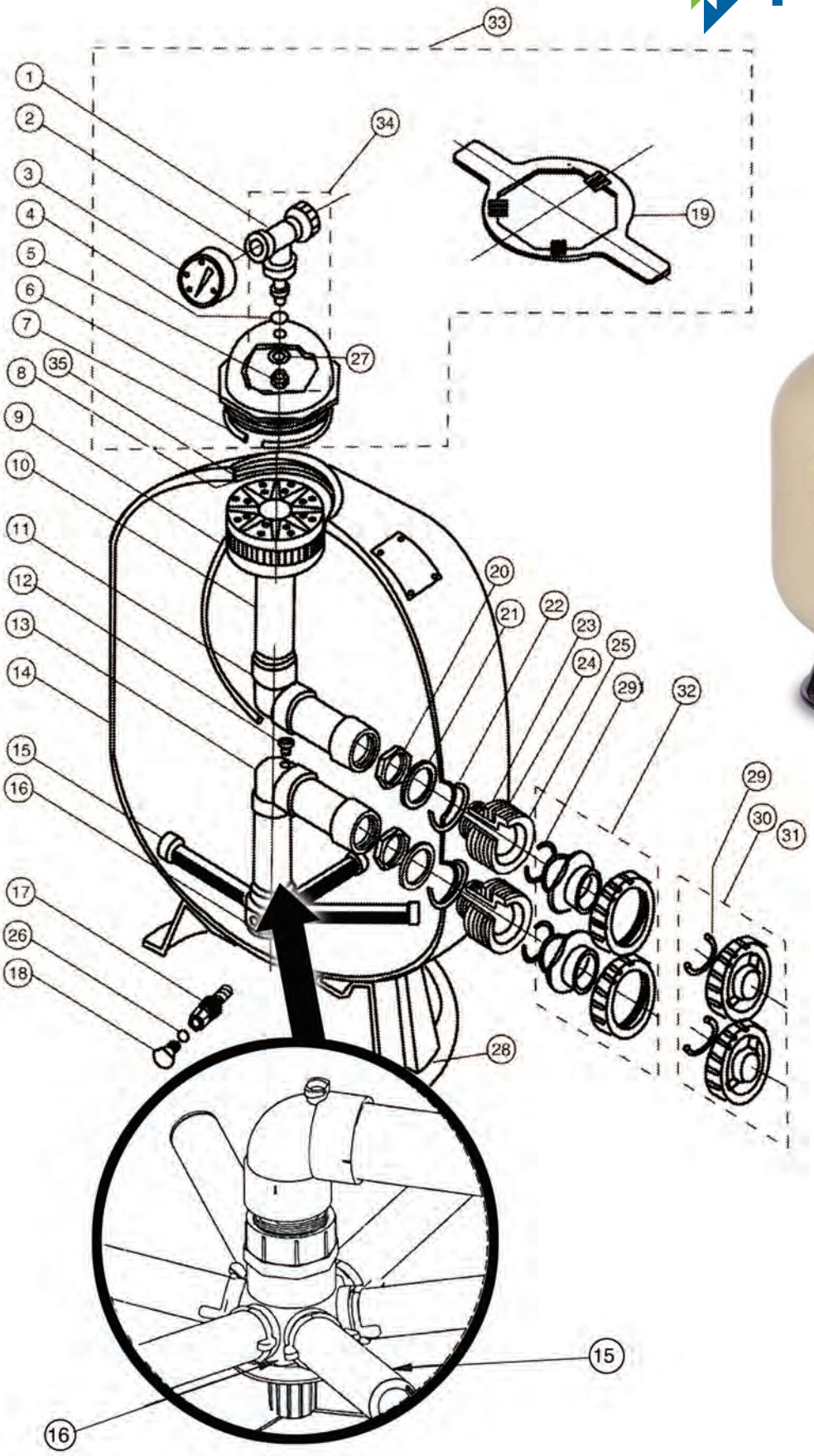

All items cataloged are normally stocked unless noted.

Not Stocked ✻ While Supplies Last

Triton II Parts
(Formerly PacFab)

Code	New Product Number	Old Product Number	Key	Description
	PEN154689Z	154689	1	Bleeder valve
	PEN154700	154700	2	Bleeder Adapter
	PEN154661	154661	4	O-ring, gauge
	PEN154664	154664	5	Jam nut
	PEN154559	154559	6	Lid 1991 or Older "V" threads
	AQPAPCO2387	O-108	7	Lid O-ring (154495)
	PEN154493	154493		O-ring-Black
	PEN154578	154578	8	Air relief tube strainer - ¼"
	PEN154436	154436	9	Auto air relief tube TR60 - ¼"
	PEN154437	154437	9	Auto air relief tube TR100 - ¼"
	PEN154599	154599	10	Diffuser Assembly TR60
CALL	PEN154462	154462	10	Diffuser Assembly TR100
CALL	PEN154533	154533	11	Top piping Assembly TR60
CALL	PEN154426	154426	11	Top piping Assembly TR100
	PEN154440	154440	12	Male connector ¼" x ⅛" MPT, plastic for filters before Feb. 1989
	PEN150036	150036	12	Male connector ⅜", plastic for filters after Nov. 1st, 2009
CALL	PEN154805	154805	13	Lower piping Assembly TR60
CALL	PEN154807	154807	13	Lower piping Assembly TR100
	PEN152290	152290	15	Lateral TR40 & 60 (8 required)
	PEN150085	150085	15	Lateral Grey ¼ Turn on TR60's built after 6/07 (6 required)
	PEN152202	152202	15	Lateral TR100 After 1985 (8 required)
	PEN154540Z	154540	15	Lateral TR140 (8 required)
	PEN154763	154763	16	Hub threaded TR40 &60
	PEN155284	155284	16	Lower piping Assembly for TR60's Built after 6/07
	PEN154453	154453	16	Hub TR100 &140
	PEN154685	154685	17	Drain - before 1983 (½")
	PEN154698	154698	17	Drain - after 1983 (¾")
	PENU178920P	U178-920P	18	Pipe Plug, ¼" thread (Can substitute 357161)
	PEN154512	154512		Wrench (Not Shown)
	PEN154412	154412	20	Internal locknut 2" PVC
	PEN154416	154416	21	Internal spacer 2" PVC
	AEQO179	O-179	22	O-ring, 2" bulkhead (154492)
	PEN154492	154492	22	O-ring, 2" bulkhead
	PEN154408	154408	23	External spacer, 2" PVC
	AEQG98	G-98	24	Gasket, 2" Bulkhead
	PEN154405	154405	25	2" Bulkhead fitting, PVC
	AQPAPCO2395	O-130	26	Drain Plug O-ring (192115)
	PEN192115Z	192115	26	Drain Plug O-ring
	AQPAPCO2372	O-83	29	O-ring, Valve Adapter (274494)
	PEN274494	274494	29	O-ring, Valve Adapter
	PEN271096	271096	32	Valve Adaptor Kit (two) for 1½" or 2" (slip)

Lid Thread Detail

6" Buttress Thread
Made After 12/1/91

6" "V" Thread
Made Before 12/1/91

All items cataloged are normally stocked unless noted.
◆ Not Stocked ✻ While Supplies Last

QUALITY POOL SUPPLY

PENTAIR

Triton Commercial

TR100C
TR140C

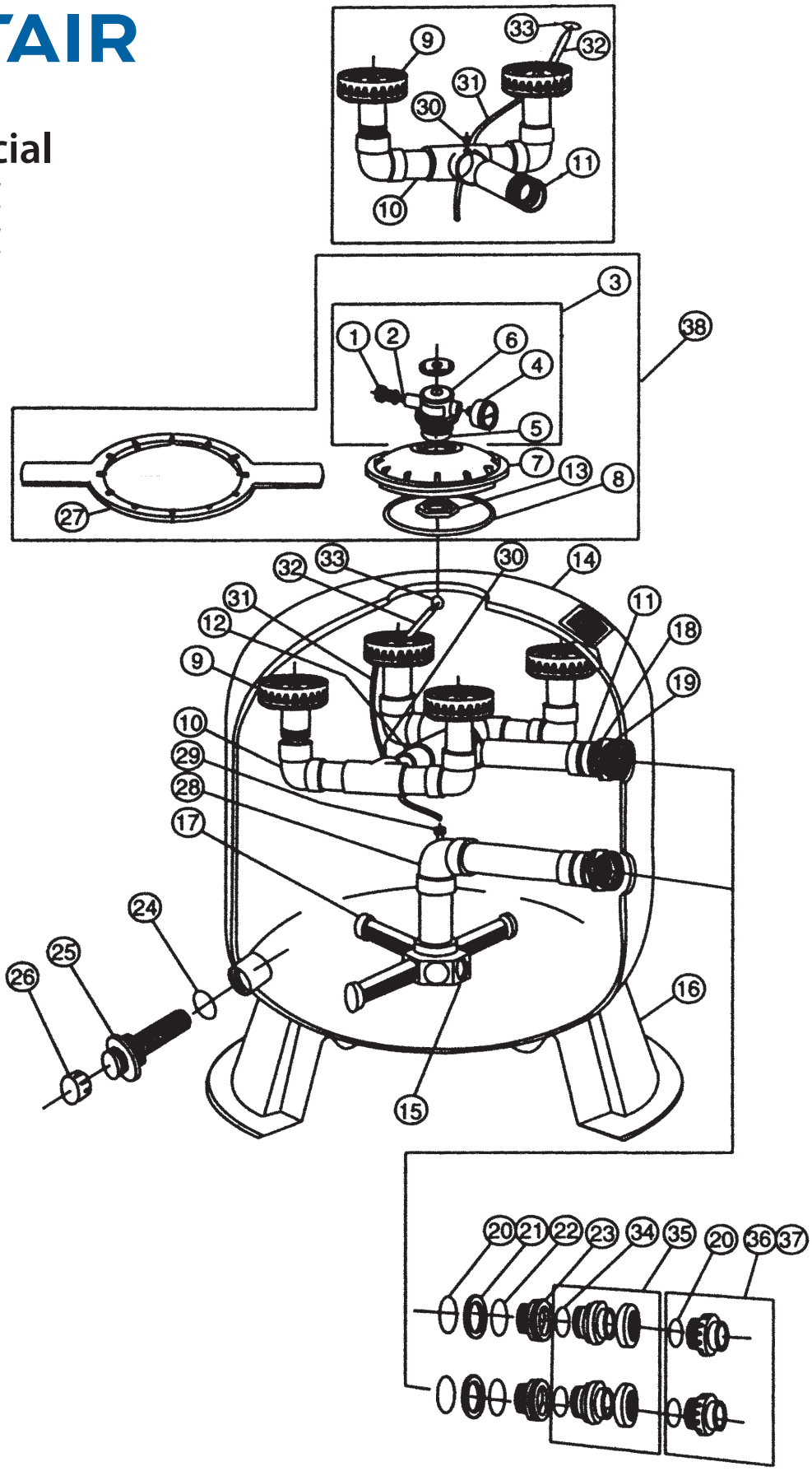

All items cataloged are normally stocked unless noted.

Not Stocked ✻ While Supplies Last

Code	New Product Number	Old Product Number	Key	Description
		Triton Commercial TR100C & TR140C		
	PEN273512	273512	1	Air Bleeder w/O-ring
	PEN273513	273513	2	O-ring air bleeder screw
	PEN273564Z	273564	3	Manual air relief body Assembly
	AMGEIPPG6024BNL	155050	4	Pressure Gauge - Backmount (Replacing with 190059) (Generic)
	PEN190059	190059	4	Pressure Gauge - Backmount (Pentair)
	PEN274495	274495	5	O-ring
	PEN273564Z	273564	6	Valve body machined
	PEN154575	154575	7	Closure 8½" btr.
	PEN152509Z	152509	8	Square Ring
	PEN154599	154599	9	Diffuser TR100C & TR140C
CALL	PEN156355	156355	10	Piping assembly upper TR100C,TR140C
CALL	PEN156344	156344	11	Piping assembly upper inlet TR100C, TR140C
CALL	PEN156354	156354	12	Piping connection assembly upper TR140C
	PEN154412	154412	13	Nut 2" internal
◆	PEN153430	153430	14	Tank & foot assembly TR100C
◆	PEN153431	153431	14	Tank & foot assembly TR140C
	PEN154453	154453	15	Hub lateral TR100C,TR140C
◆	PEN154596	154596	16	Foot 24" dia. TR100C, TR140C
	PEN152202	152202	17	Lateral 9⅛" TR100C
	PEN154540Z	154540	17	Lateral 12" TR140C
	PEN154412	154412	18	Locknut 2" Internal
	PEN154416	154416	19	Spacer 2" Internal
	PEN154492	154492	20	O-ring 2" Bulkhead
	PEN154408	154408	21	Spacer 2" External
	PEN154538	154538	22	Gasket 2" External
	PEN154405	154405	23	Bulkhead 2"
	PEN154492	154492	24	O-ring Use 27-4494
	PEN152220Z	152220	25	2" Sand Drain
	PEN154871	154871	26	1½" Cap Threaded Closure
	PEN154527	154527	27	Wrench for 8½" Closure
	PEN154807	154807	28	Piping Assembly Lower TR100C
◆	PEN154489	154489	28	Piping Assembly Lower TR140C
	PEN150036	150036	29	Connector air relief tube ⅜" - Units manufactured after 11-1-99
CALL	PEN273071	273071	30	Screw TR100C, TR140C
	PEN154437	154437	31	Tube air relief TR100C ¼" - Units manufactured before 11-1-99
CALL	PEN150041	150041	31	Tube air relief TR100C ⅜" - Units manufactured after 11-1-99
	PEN154438	154438	31	Tube air relief TR140C ¼" - Units manufactured before 11-1-99
	PEN150042	150042	31	Tube air relief TR140C ⅜" - Units manufactured after 11-1-99
CALL	PEN154507	154507	32	Spacer air vent strainer TR100C
CALL	PEN154508	154508	32	Spacer air vent strainer TR140C
	PEN154578	154578	33	Strainer air relief ¼" - Units manufactured before 11-1-99
	PEN150035	150035	33	Strainer air relief ⅜" - Units manufactured after 11-1-99
	PEN274494	274494	34	O-ring valve Adaptor
	PEN271096	271096	35	1½" & 2" Slip Adaptor Kit
	PEN271092	271092	36	2" Threaded Adaptor Kit
	PEN271094	271094	37	1½" Threaded Adaptor Kit
◆	PEN154856	154856	38	Closure Kit 8½" Black Treaded

All items cataloged are normally stocked unless noted.
◆ Not Stocked ✻ While Supplies Last

QUALITY POOL SUPPLY

Dynamic Series III

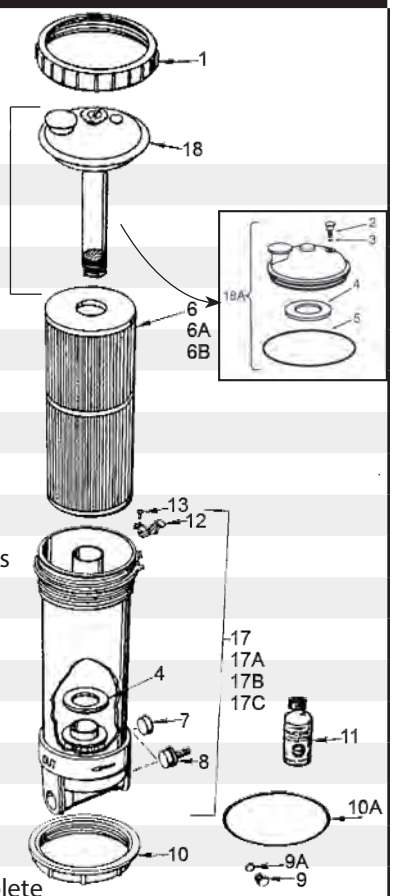

Code	New Product Number	Old Product Number	Key	Description
	PENR172214	R172214	1	Lock Ring
	PENR172224	R172224	2	Drain/Vent Knob
	PENR172221	R172221	3	O-ring for Knob (O-30)
	PENR172222	R172222	4	Gasket, Cartridge
	PENR172223	R172223	5	O-ring, Lid (O-330)
	UNFC4625	C-4625	6	Cartridge - see page 76
	PENR172225X	R172225X	7	Plug to Disable By-pass
	PENR172226X	R172226X	8	By-pass Assembly for 1½"
	PENR172684	R172684	8A	By-pass Assembly for 2"
	PENR172392	R172392	9	Access Plug Earlier Models
	PENR172393	R172393	9A	O-ring Access Plug
	PENR172370	R172370	10	Bottom Locking Flange
	PENR172541	R172541	10A	Gasket, Locking Flange
	PENR172036	R172036	11	Silicone Lubricant
	PENR172374	R172374	12	Lock Spring
	PENR172375	R172375	13	Lock Screw
	PENR172386	R172386	17	Housing Assembly 1½"
	PENR172540	R172540	18	Bromine Dispenser Complete
	PENR172385	R172385	18A	Lid with no Bromine Dispenser

Rainbow Dynamic

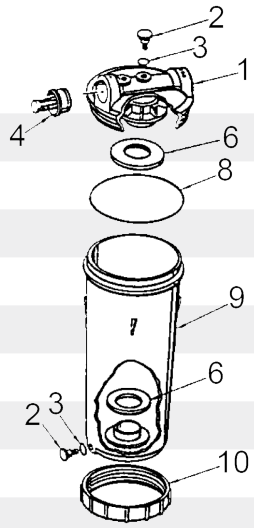

Code	New Product Number	Old Product Number	Key	Description
	PENR172213S	R172213S	1	Top Only (slip)
	PENR172213	R172213	1A	Top Only (threaded)
	PENR172224	R172224	2	Drain/Vent Knob
	PENR172221	R172221	3	O-ring for Knob (O-30)
	PENR172222	R172222	6	Cartridge Gasket
	UNFC4625	C-4625	7	Cartridge—see page 64
	PENR172223	R172223	8	O-ring (O-330)
	PENR172212	R172212	9	Cartridge Housing
	PENR172214	R172214	10	Lock Ring

Dynamic Series IV

DFM, DFML Parts

Code	New Product Number	Old Product Number	Key	Description
	PENR172660	R172660		Lily Skimmer Float Assembly
	PENR172661	R172661		Lily Filter Basket

All items cataloged are normally stocked unless noted.

Not Stocked ✻ While Supplies Last

STA-RITE

PLM100

Code	New Product Number	Old Product Number	Key	Description
	PEN270010054	27001-0054	1	Posi-Lok™ Ring
	PEN250100200	25010-0200	2	Air release valve assembly w/O-ring
	AEQO484	O-484	4	O-ring (27001-0061S)
	PEN270010060S	27001-0060S	4	O-ring (Pre 3/97)
◆	PEN270010009S	27001-0009S	5	Tank Shell - Lower half
	PEN270010051	27001-0051	6	Safety latch for ring
	PEN270010022	27001-0022	7A	1½" NPT Plug
	PEN249000510	24900-0510	7B	Adapter fitting
	AQPAPCO2372	O-83	8	O-ring (35505-1424)
	PENU78820P	U78-820P	9	2" x 1½" Pipe Reducer
	AMGEIPPG6024BNL	155050	10	2" Pressure gauge ¼" (Generic)
	PEN248000121	24800-0121	11	Air bleed assembly
	PEN270020100S	27002-0100S	12	Cartridge
	PEN270010130S	27001-0130S	13	Spring check valve

All items cataloged are normally stocked unless noted.

◆ Not Stocked ✻ While Supplies Last

QUALITY POOL SUPPLY

Code	New Product Number	Old Product Number	Key	Description
		Sta-Rite Posi-Flow		
	AEQO39	O-39	1	Air Release Valve O-ring (U9-359)
	PEN154689Z	154689	2	Tee/Valve
	AEQO443	O-443	4	O-ring (top) U9-301
	AEQO239	O-239	4A	O-ring (base) WC9-3
			6	Cartridge -
				WC108-56S2X for PTM50
				WC108-57S2X for PTM70
				WC108-58S2X for PTM100
	PENWC10478P	WC104-78P	7	Base with plug
	PENWC7838T	WC78-38T	9	Plug, ¾"
	PENWC361	WC36-1	10	Nut
	PENWC1943	WC19-43	11	Clamp
	PEN250100008	25010-0008	12	Air Tube (100)
	PENWC8126Z	WC8-126Z	13	Air Tube Filter
	PENWC1964	WC19-64	14	Clamp
	PENWC3622	WC36-22	15	Clamp Knob
	AMGEIPPG6024BNL	155050	17	Pressure Gauge - Backmount (Generic)
	PEN190059	190059	17	Pressure Gauge - Backmount (Pentair)

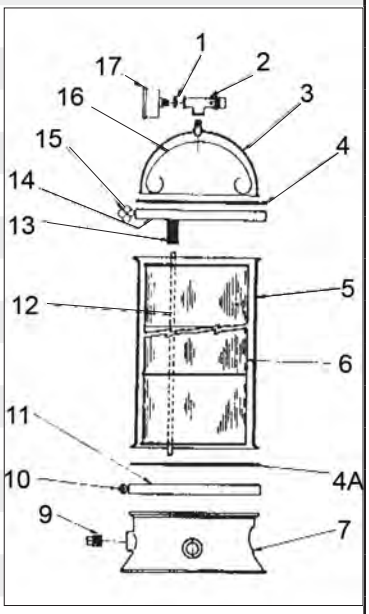

		Star Filter		
	PEN272515	272515	3	Air Bleeder w/o O-ring
	PEN190059	190059	5	Pressure Gauge -
	AMGEIPPG6024BNL	155050	5	Backmount (Pentair) (Generic)
	PEN155564	155564	6	O-ring
	PEN191950	191950	11	Manifold Assembly
	PEN174704	174704	12	O-ring, Tank
	PEN191322	191322	13	Grid - ST40, ST50
	PEN191467	191467	14	Retainer, Grid Bottom
	PEN191474	191474	17	O-ring, Plug

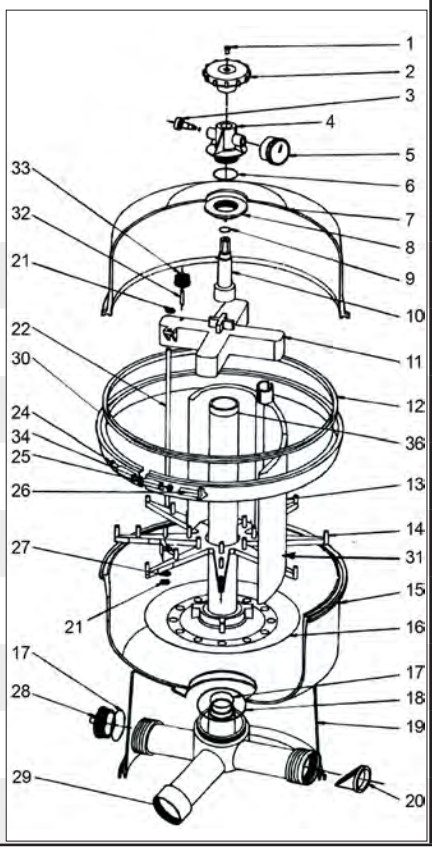

All items cataloged are normally stocked unless noted.

Not Stocked ✻ While Supplies Last

PENTAIR

FNS® Plus Filters

Replacement Parts for Vertical Grid Filters

Code	New Product Number	Old Product Number	Key	Description
	PEN190058	190058	1	Gauge, pressure
	PEN98209800	98209800	2	High Flow Manual Air Relief Valve (HFMARV)
	PEN59000800	59000800	5	Tie Rod, 24 sq. ft. filter
	PEN59001500	59001500	5	Tie Rod, 36 sq. ft. filter
	PEN59002100	59002100	5	Tie Rod, 48 sq. ft. filter
	PEN59002700	59002700	5	Tie Rod, 60 sq. ft. filter
	PEN59023700	59023700	6	Manifold, top with air bleed
	PEN190092	190092	7	Internal air bleed assembly
	PEN98725800	98725800	8	Template, filter
	PEN59001100	59001100	9	Grid, lg. 12 in., 24 sq. ft. filter
	PEN59001800	59001800	9	Grid, lg. 18 in., 36 sq. ft. filter
	PEN59002400	59002400	9	Grid, lg. 24 in., 48 sq. ft. filter
	PEN59003000	59003000	9	Grid, lg. 30 in., 60 sq. ft. filter
	PEN59001000	59001000	10	Grid, sm. 12 in., 24 sq. ft. filter
	PEN59001700	59001700	10	Grid, sm. 18 in., 36 sq. ft. filter
	PEN59002300	59002300	10	Grid, sm. 24 in., 48 sq. ft. filter
	PEN59002900	59002900	10	Grid, sm. 30 in., 60 sq. ft. filter
	PEN59023800	59023800	11	Assy., element grid, complete, 24 sq. ft. filter
	PEN59023500	59023500	11	Assy., element grid, complete, 36 sq. ft. filter
	PEN59023400	59023400	11	Assy., element grid, complete, 48 sq. ft. filter
	PEN59023300	59023300	11	Assy., element grid, complete, 60 sq. ft. filter
	PEN98211400	98211400	12	Nut, 1/4-20, plated brass
	PEN59000500	59000500	13	Spider, grid locator
	PEN58001000	58001000	14	Nut, lock, hex, nylon
	PEN39010200	39010200	15	O-ring, tank clamp (.470 O.D.)
	PEN190003	190003	16	Clamp, kit
	PEN195610	195610	17	Washer, small I.D.
	PEN195611	195611	17a	Washer, large I.D.
	PEN194997	194997	18	Nut, machined
	PEN195612	195612	18a	Spring
	PEN190034	190034	19	Assy., standpipe, outlet, 24 sq. ft. filter
	PEN190035	190035	19	Assy., standpipe, outlet, 36 sq. ft. filter
	PEN190036	190036	19	Assy., standpipe, outlet, 48 sq. ft. filter
	PEN190037	190037	19	Assy., standpipe, outlet, 60 sq. ft. filter
	PEN86006900	86006900	20	O-ring, bulkhead
	PEN271096	271096	21	Bulkhead union (set)
	PEN190043	190043	22	Assembly, pipe, inlet
	PEN51005000	51005000	23	O-ring for drain plug
	PEN86202000	86202000	24	Plug, 1½ in. drain, with O-ring
	PEN170016	170016	25	Tank, bottom, assy., 36 sq. ft. filter
	PEN170017	170017	25	Tank, bottom, assy., 48 sq. ft. filter
	PEN170018	170018	25	Tank, bottom, assy., 60 sq. ft. filter
	PEN170019	170019	26	Lid, assy., 24 sq. ft. filter
	PEN170020	170020	26	Lid, assy., 36 sq. ft. filter
	PEN170021	170021	26	Lid, assy., 48 sq. ft. filter
	PEN59000600	59000600	27	O-ring, bulkhead (can use 0-27)
	PEN192320	192320	28	O-ring 2-137 Buna N 70SH
	PEN194801	194801	29	Bulkhead, 2 in.
	PEN195339	195339	30	Ring, back-up

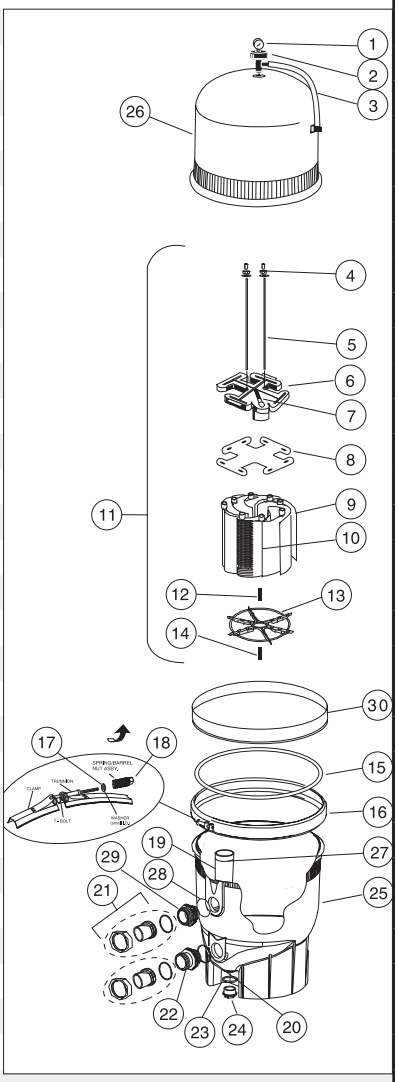

All items cataloged are normally stocked unless noted.

◆ Not Stocked ✻ While Supplies Last

QUALITY POOL SUPPLY

STA-RITE SYSTEM:3 FILTRATION

Modular Media Parts
(Cartridge)
Models S7M120 & S8M150

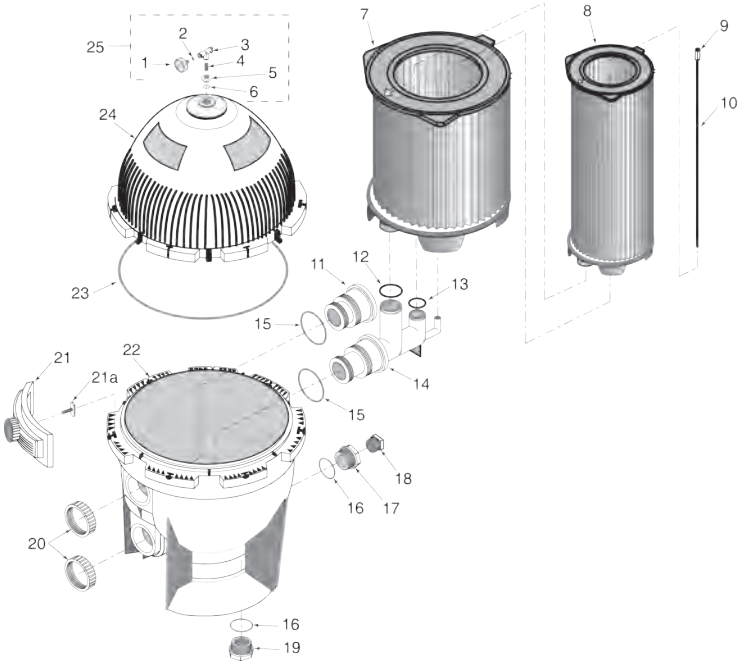

Code	New Product Number	Old Product Number	Key	Description
	AMGEIPPG6024BNL	155050	1	Pressure Gauge - Backmount (Generic)
	PENWC872D	WC8-72D	2	Screen Filter
	PEN154689Z	154689	3	Air Release Valve
	PENU212252DS	U212-252DS		Brass Air Bleed Optional
	PEN352020959	35202-0959	4	Nipple
	PEN249000504	24900-0504	5	Adapter Bushing
	AEQO315	O-315	6	O-ring (35505-1423)
	PEN250220201S	25022-0201S	7	Large Cartridge
	PEN250220203S	25022-0203S	7	Large Cartridge
	PEN250210200S	25021-0200S	8	Small Cartridge
	PEN250210202S	25021-0202S	8	Small Cartridge
	PENWC8126Z	WC8-126Z	9	Air Bleed Filter
	PEN250210003	25021-0003	10	Air Bleed Tube
	PEN250210101	25021-0101	11	Baffle and Bulkhead Fitting
	AEQO41	O-41	12	O-ring (35505-1428)
	AQPAPCO2230	O-40	13	O-ring (35505-1429)
	PEN250210100	25021-0100	14	Elbow and Bulkhead Assembly
	PEN355051425	35505-1425	15	O-ring
	AQPAPCO2372	O-83	16	O-ring (35505-1424)
	PEN249000509	24900-0509	17	Adapter Fitting
	PEN363054008	36305-4008	18	1½" NPT Plug
	PEN249000503	24900-0503	19	Drain Plug
	PEN247520050	24752-0050	20	Bulkhead Retaining Nut
	PEN248500200	24850-0200	21	Clamp Assembly
	PEN248500010	24850-0010	21A	Clamp Bolt
	PEN248500102S	24850-0102S	22	Lower Tank Half
	PEN248510103S	24851-0103S	22	Lower Tank Half
	PEN248500008	24850-0008	23	Cord Ring
	PEN248500009	24850-0009	23	Cord Ring
	PEN248519000	24851-9000	24	Upper Tank Half Includes all decals & labels
	PEN248519001	24851-9001	24	Upper Tank Half Includes all decals & labels

All items cataloged are normally stocked unless noted.

Not Stocked ✻ While Supplies Last

STA-RITE SYSTEM:3 FILTRATION

Sand Filter Parts

Models S7S50 & S8S70

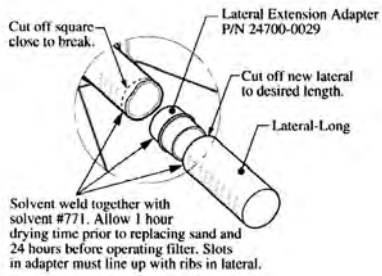

Lateral repair procedure:
WARNING - To avoid serious personal injury or property damage, follow cement manufacturer's instructions exactly.

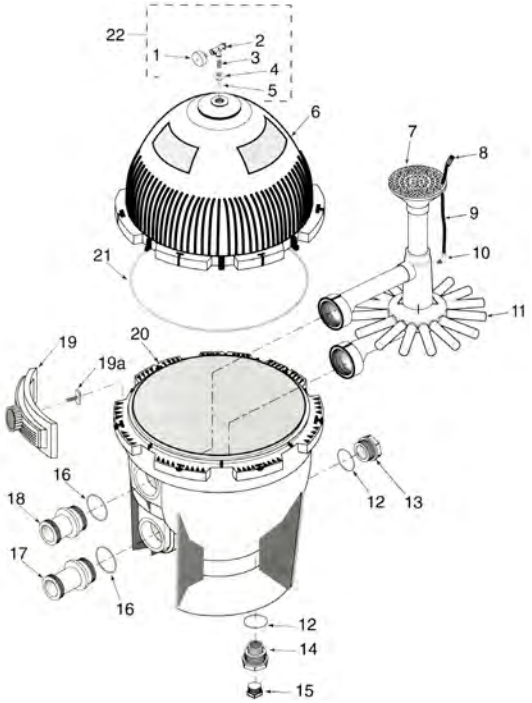

Code	New Product Number	Old Product Number	Key	Description
	PEN190059	190059	1	Pressure Gauge - Backmount (Pentair)
	PEN154689Z	154689	2	Tee Air Bleeder Valve
	PEN352020959	35202-0959	3	Nipple
	PEN249000504	24900-0504	4	Adapter Bushing
	PEN355051423	35505-1423	5	O-ring
	PEN248519000	24851-9000	6	Upper Half Tank Kit (Model S7S50)
	PEN248519001	24851-9001	6	Upper Half Tank Kit (Model S8S70)
	PEN249000100S	24900-0100S	7	Collector Assembly (includes Laterals) (Model S7S50)
	PEN249010100S	24901-0100S	7	Collector Assembly (includes Laterals) (Model S8S70)
	PENWC8126Z	WC8-126Z	8	Air Bleed Filter
	PENWC37386P	WC37-386P	9	Vent Tube
	PEN249000002	24900-0002	11	Lateral (Model S7S50)
	PEN249010003	24901-0003	11	Lateral (Model S8S70)
	PEN355051424	35505-1424	12	O-ring (Pentair)
	AQPAPCO2372	O-83	12	O-ring (other)
	PEN249000503	24900-0503	13	Threaded Plug
	PEN249000505	24900-0505	14	Drain Fitting
	PEN270010022	27001-0022	15	1½" NPT Plug
	PEN355051425	35505-1425	16	O-ring
	PEN249000500	24900-0500	17	Tank Fitting (Upper System)
	PEN249000501	24900-0501	18	Tank Fitting (Lower System)
	PEN248500200	24850-0200	19	Clamp Assembly (Model S7S50 uses 7 clamps and S8S70 uses 8)
	PEN248500010	24850-0010	19A	Clamp Bolt
	PEN248500102S	24850-0102S	20	Lower Half Tank (Model S7S50)
	PEN248510103S	24851-0103S	20	Lower Half Tank (Model S8S70)
	PEN248500008	24850-0008	21	Cord Ring (Model S7S50)
	PEN248500009	24850-0009	21	Cord Ring (Model S8S70)
	PEN248500105	24850-0105	22	Valve Gauge Assembly (includes 1, 2, 3, 4 & 5)
	PEN247000029	24700-0029		Lateral Extension Adapter
	PEN248500016	24850-0016		Clamp Retaining Ring
	PEN250212021	25021-2021		Sand Conversion Kit (includes 12, 13, 14, 15, 16, 17, 18) (Model S7S50)
	PEN250212025	25021-2025		Sand Conversion Kit (includes 12, 13, 14, 15, 16, 17, 18) (Model S8S70)

All items cataloged are normally stocked unless noted.
◆ Not Stocked ✻ While Supplies Last

QUALITY POOL SUPPLY

STA-RITE SYSTEM:3 FILTRATION

DE Filter Parts

Models S7D75 & S8D110

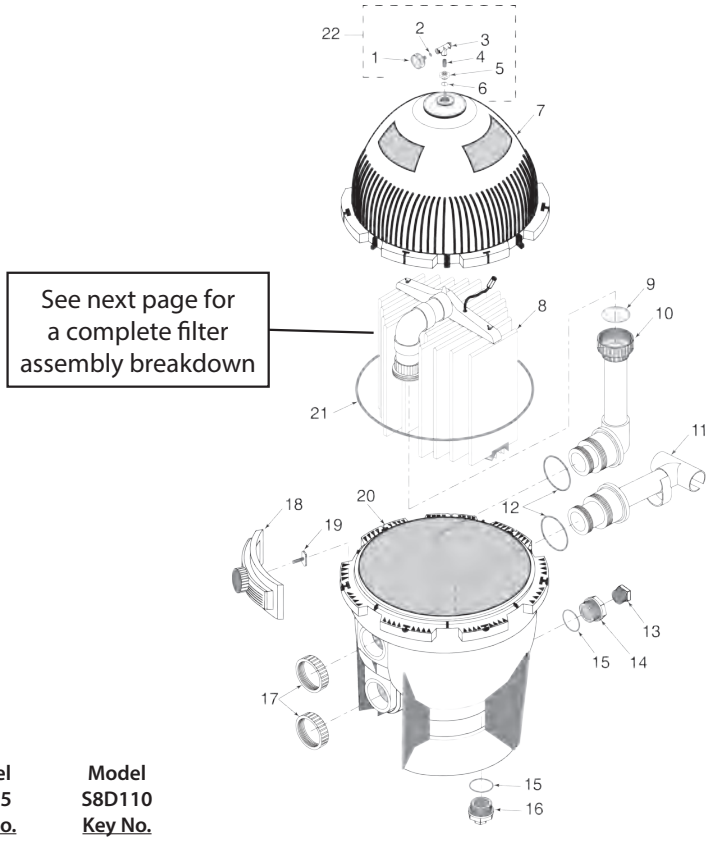

Code	New Product Number	Old Product Number	Model S7D75 Key No.	Model S8D110 Key No.	Description
	AMGEIPPG6024BNL	155050	1	1	Pressure Gauge (Generic)
	PEN190059	190059	1	1	Pressure Gauge (Pentair OEM)
	PENWC872D	WC8-72D	2	2	Screen Filter
	PEN154689Z	154689	3	3	Air Release Valve
	PENU212252DS	U212-252DS			Brass Air Bleed (Optional)
	PEN352020959	35202-0959	4	4	Nipple
	PEN249000504	24900-0504	5	5	Adapter Bushing
	AEQO315	O-315	6	6	O-ring (35505-1423)
	PEN248519000	24851-9000	7		Upper Tank Half Includes all decals & labels
	PEN248519001	24851-9001	7		Upper Tank Half Includes all decals & labels
	PEN239001220S	23900-1220S	8		Filter Assembly - See next page for diagram
	PEN239001221S	23900-1221S		8	Filter Assembly - See next page for diagram
	AQPAPCO2429	O-244	9	9	O-ring (U9-362)
	PEN239110102	23911-0102	10	10	Outlet Assembly
	PEN239110100	23911-0100	11	11	Inlet Assembly
	PEN355051425	35505-1425	12	12	O-ring
	PEN363054008	36305-4008	13	13	1½" NPT Plug
	PEN249000509	24900-0509	14	14	Adapter Fitting
	AQPAPCO2372	O-83	15	15	O-ring (35505-1424)
	PEN249000503	24900-0503	16	16	Drain Plug
	PEN247520050	24752-0050	17	17	Bulkhead Retaining Nut
	PEN248500200	24850-0200	18	18	Clamp Assembly
	PEN248500010	24850-0010	19	19	Clamp Bolt
	PEN248500102S	24850-0102S	20		Lower Tank Half
	PEN248510103S	24851-0103S	20		Lower Tank Half
	PEN248500008	24850-0008	21		Cord Ring Tank
	PEN248500009	24850-0009		21	Cord Ring

All items cataloged are normally stocked unless noted.

Not Stocked ✻ While Supplies Last

Code	New Product Number	Old Product Number	Key	Description

STA-RITE SYSTEM:3 FILTRATION

DE Filter Parts

Models S7D75 & S8D110

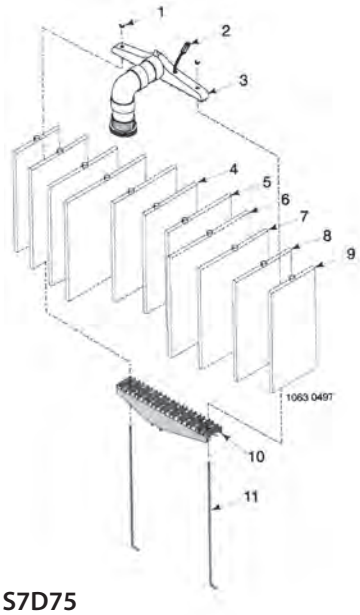

S7D75

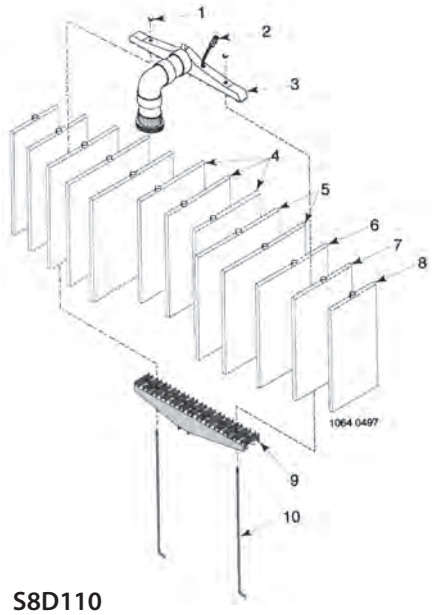

S8D110

		S7D75		
	PEN354020074Z	35402-0074Z	1	Wing Nut
	PEN248000120	24800-0120	2	Air Bleed Assembly
	PEN248000100	24800-0100	3	Manifold
	UNFFG3912	FG-3912	4	Cover Element 12 7/16"
	UNFFG3913	FG-3913	5	Cover Element 13 13/16"
	UNFFG3016	FG-3016	6	Cover Element 16½"
	UNFFG3015	FG-3015	7	Cover Element 15 3/16"
	UNFFG3012	FG-3012	8	Cover Element 12 7/16"
	UNFFG3009	FG-3009	9	Cover Element 9 11/16"
	PEN239000350	23900-0350	10	Element Grid Support
	PEN239000039	23900-0039	11	Rod
		S8D110		
	PEN354020074Z	35402-0074Z	1	Wing Nut
	PEN248000120	24800-0120	2	Air Bleed Assembly
	PEN248010101	24801-0101	3	Manifold
	UNFFG3916	FG-3916	4	Cover Element 16½"
	UNFFG3019	FG-3019	5	Cover Element 19 5/16"
	UNFFG3016	FG-3016	6	Cover Element 16½"
	UNFFG3015	FG-3015	7	Cover Element 15 3/16"
	UNFFG3011	FG-3011	8	Cover Element 11"
	PEN239010350	23901-0350	9	Element Grid Support
	PEN239000039	23900-0039	10	Rod

QUALITY POOL SUPPLY

PENTAIR

Meteor Filter & Filter System Parts

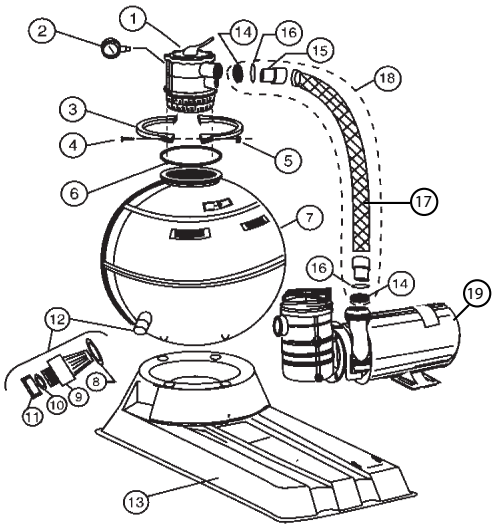

Code	New Product Number	Old Product Number	Description	
	PEN55025700	55025700	Lateral 18, 20, 22" filters (8 Req.)	
	PEN55027500	55027500	Standpipe/lateral Assembly 18" filter	
◆	PEN55027600	55027600	Standpipe/lateral Assembly 20" filter	
	PEN55027700	55027700	Standpipe/lateral Assembly 22" filter	
◆	PEN85019300	85019300	Backwash adapter, 1½" NPT Z barb.	
	PEN85019000	85019000	Backwash sight glass, 18 & 20" filter	
	PEN85019100	85019100	Backwash sight glass, 22" filter	
	AMGEIPPG6024BNL	155050	2	Gauge, pressure, backmount (Replace with 190059) (Generic)
	PEN190059	190059		Gauge, pressure, backmount (Pentair)
	PEN51020900	51020900	3	Clamp, multiport valve
	PEN98209000	98209000	4	Screw, clamp
	PEN98211400	98211400	5	Nut, clamp
CALL	PEN51011900	51011900	6	O-ring, MPV, 22" filter
	PEN51005000	51005000	8	O-ring, drain/insp. fittings
◆	PEN86300300	86300300	9	Fitting, drain sand/water
	PEN86300500	86300500	10	Gasket, drain cap
	PEN86300400	86300400	11	Cap, drain
	PEN55007800	55007800	12	Drain Assembly, complete
◆	PEN55215000	55215000	13	Skid base, 20", 22"
	PEN50152300	50152300	16	O-ring, hose Assembly
	PEN711004	711004	14	Clamp hose 1½" Worm Gear Type
◆	PEN79302100	79302100	17	Hose, clear. braided, 18" filter (85020100)
◆	PEN79302200	79302200	17	Hose, clear. braided, 20" filter (85020200)
◆	PEN79302300	79302300	17	Hose, clear. braided, 22" filter (85020300)
◆	PEN86013000	86013000	18	Hose Assembly, clear. braided, 18" filter
◆	PEN86013090	86013090	18	Hose Assembly, clear. braided, 20" filter
	PEN86013100	86013100	18	Hose Assembly, clear. braided, 22" filter
			19	Dynamo Pump
◆	PEN51016600	510166		Hose adapter (85004500)(510165)
	PENPEN071426	PEN071426		O-ring, swivel union (39102800)
◆	PEN155151	155151		1½ Hose Kit for System

All items cataloged are normally stocked unless noted.

Not Stocked ✻ While Supplies Last

Code	New Product Number	Old Product Number	Description
	SWIMQUIP	**Swimquip Filter Parts**	
◆	PEN239000032	23900-0032	11" Element (DES & DEP Models) use FG-3011
CALL	PEN239000033	23900-0033	16" Element (DES & DEP Models) use FG-3016
CALL	PEN239000034	23900-0034	22" Element (DES & DEP Models) use FG-3022
	PEN239000039	23900-0039	Brass vertical tie rod
	PEN239010019	23901-0019	Grid Support for DEP-51
	PEN239020019	23902-0019	Grid Support for DEP-83
	PEN246000003	24600-0003	Short Lateral for HRP-24
	PEN247000029	24700-0029	Lateral Adapter for HRP-30
	PEN247000075	24700-0075	Laterals for HRS/ HRP 24 & 30
	AEQO104	O-104	O-ring for HRP & DEP 24" Tank (24751-0005)
	AEQO105	O-105	O-ring for HRP & DEP 30" Tank (24752-0005)
	PEN247520006	24752-0006	O-ring for HRPB-30
	PEN247520049	24752-0049	Tank Fitting Nut HRP & DEP All Models
	PEN247520530	24752-0530	Complete Internal for HRP-30
✻	PEN247610057	24761-0057	Collector Manifold for DEP-51
	PEN307264260	30726-4260	24" Tank Bolt for HRP & DEP
	PEN343020518	34302-0518	Std. Insert F #832-48 Brass
	PENU3074ZP	U30-74ZP	⅜-16 X 1" Hex Screw
✻	PENU3091C	U30-91C	½-13 X 2-½" Lg. Hex. (Obsolete)
	PENU212252D	U212-252D	Air Release
	AQPAPCO2229	O-4	O-ring for Fill Cap
	PEN355151296	35515-1296	Quad O-Ring
		Plastic Slide Valve (14936-0000)	
	PEN149300033	14930-0033	Piston Assembly (Replaces 14930-0005)
	PEN149300012	14930-0012	Index Plate & O-ring
	PEN149300031	14930-0031	Lever Handle (14930-0014)
	PEN149300016	14930-0016	Linkage for Lever Handle
✻	PEN149600009	14960-0009	Quad Ring
	PEN149620017	14962-0017	Plug w/gasket Assembly
	AQPAPCO2395	O-130	Shaft O-ring (35505-1116)
	AQPAPCO2430	O-245	Cap O-ring (35505-1246)
	AEQO370	O-370	Wafer Seal O-ring (35505-1318)
	PEN358170056	35817-0056	⅛" X 9⁄16" Spring Pin (Upper)
✻	PEN51009500	51009500	⅛" X ⅞" Spring Pin (Handle or Shaft)
		Bronze Slide Valve (1½" = 14821-0000 2" = 14826-0000)	
	PEN148190011	14819-0011	1-½" Piston Assembly
	PEN148210005	14821-0005	Lever Handle for 1-½" & 2"
	PEN148210007	14821-0007	Index Plate for 1-½"
	PEN148210008	14821-0008	Linkage for Lever Handle
	PEN148230011	14823-0011	2" Piston Assembly
	AEQO122	O-122	2" Wafer Seal O-ring (35505-1313)
	AEQO114	O-114	1-½" Wafer Seal O-ring (35505-1401)
	AEQO139	O-139	O-ring (35505-1408)
	PEN370620130	37062-0130	10-32 X ⅜" Screw

23902-0019

24752-0530

14930-0033

14930-0031

All items cataloged are normally stocked unless noted.

◆ Not Stocked ✻ While Supplies Last

QUALITY POOL SUPPLY

NOTES

All items cataloged are normally stocked unless noted.

Not Stocked ✻ While Supplies Last

PRODUCTS

Circulating Pumps 132
Commercial 129
Hayward 124
Jandy 121
Pentair 126
Spa Pumps 133
Sta-Rite 128
Submersible 135
Waterway 131

PARTS

Aquaflo 175
Baskets 145
Hayward 146
Motors 136
Pentair 156
Shaft Seals 144
Sta-Rite 152
Sta-Rite Trap Kits 162
Waterway 168

Jandy®

A BIGGER POOL REQUIRES A BETTER PARTNER.

We Deliver on Dependability

Any design. Any function. Any size.

We've got the equipment solution to get you there. Let Jandy be the foundation of your most extraordinary commercial pool designs.

Download our complete commercial catalog at JANDY.COM/COMMERCIAL

©2022 Zodiac Pool Systems LLC. All rights reserved. ZODIAC® is a registered trademark of Zodiac International, S.A.S.U., used under license. All other trademarks are the property of their respective owners. 5377.4_AD

Code	New Product Number	Old Product Number	Description
			Jandy® Pro Series — Stealth™ High Head Pumps
	JNDSHPF50	SHPF.50	½ HP
	JNDSHPF75	SHPF.75	¾ HP
	JNDSHPF10	SHPF1.0	1 HP
	JNDSHPF15	SHPF1.5	1½ HP
	JNDSHPF20	SHPF2.0	2 HP
			Jandy® Pro Series — Variable Speed Pumps
	JNDVSFHP185DV2A	VSFHP185DV2A	FloPro 1.85 HP Variable Speed Pump 115/230 VAC 2 Auxillary Relays, without Controller
CALL	JNDVSPHP270DV2A	VSPHP270DV2A	PlusHP 2.7 HP Variable Speed Pump 115/230 VAC 2 Auxillary Relays, without Controller (Stocked in Clio Only)
CALL	ZODVSSHP220DV2A	VSSHP220DV2A	ePUMP 2.2 HP Variable Speed Pump 115/230 VAC 2 Auxillary Relays, without Controller
CALL	ZODVSSHP270DV2A	VSSHP270DV2A	ePUMP 2.7 HP Variable Speed Pump 115/230 VAC 2 Auxillary Relays, without Controller
			Jandy® Pro Series — FloPro™ Series Medium Head Pumps
CALL	JNDFHPM75	FHPM.75	230/115 VAC .75HP (Stocked in Akron Only)
	JNDFHPM10	FHPM1.0	230/115 VAC 1 HP

All items cataloged are normally stocked unless noted.

Not Stocked While Supplies Last

SAVES BETTER.

Not only do our ultra-high efficiency pumps save more energy than the other guys, they're also built to save you money, time, hassle, headaches—and also energy. Did we mention they're #1 in energy efficiency?*

INDUSTRY LEADER IN ENERGY EFFICIENCY.

SUPER PUMP® XE
ULTRA-HIGH EFFICIENCY
PUMP

Scan the code to
learn more.

HAYWARD®
We Build Better.™

*Based on TriStar® VS 900 among in-ground pool pump ratings, per U.S. Department of Energy efficiency metrics as of January 1, 2022. Visit hayward.com/regulations for details.
Hayward, Hayward & Design, the H logo, and Super Pump are registered trademarks and We Build Better. is a trademark of Hayward Industries, Inc. © 2022 Hayward Industries, Inc.

LESS IS BETTER.

If less is more, AquaRite S3 Omni gives you the absolute most—with more lesses than any other salt sanitizer. Less salt to operate? Check. Less hassle to control the entire pool? Check. No more burning eyes, faded clothing or itchy skin? Check, check, check.

REQUIRES 1/3 THE SALT OF THE COMPETITION.*

AQUARITE® S3 OMNI® SALT CHLORINATION SYSTEM

Scan the code to learn more.

HAYWARD®
We Build Better.™

*Claim based on AquaRite S3 salt concentration range of 0-100% (+1%); 800-8000 ppm.

Hayward, Hayward & Design, the H logo, AquaRite and Omni are registered trademarks and We Build Better. is a trademark of Hayward Industries, Inc. © 2022 Hayward Industries, Inc.

QUALITY POOL SUPPLY

Code	New Product Number	Old Product Number	Description
HAYWARD EXPERT LINE		**Super Pump® XE**	
	HPPSP2610X15XE	SP2610X15XE	1.65 HP Dual-Voltage capability 230v/115v
HAYWARD EXPERT LINE		**Super Pump 700**	
	HPPSP2670007X10	SP2670007X10	1 HP/ Single Speed 115/230V. SF- 1.10 Port Size 1.5"
HAYWARD EXPERT LINE		**Super Pump** *All Super Pumps below are SF- 1.00*	
	HPPSP2605X7	SP2605X7	¾ HP 115/230V 1.5 Port Size
	HPPSP2615X20	SP2615X20	2 HP 115/230V 2.0 Port Size
	HPPSP2615X20XE	SP2615X20XE	2.25 Total HP
CALL	HPPSP2607X102S	SP2607X102S	1 HP 230V Dual Speed 1.5 Port Size (Stocked in Byron Center only)
HAYWARD EXPERT LINE		**Power-Flo LX** *Above Ground Pump with 6' cord*	
	HPPSP1580	SP1580	1 HP 115V 1.5 Port Size
	HPPSP1580X15	SP1580X15	1.5 nHP 115V 1.5 Port Size
HAYWARD EXPERT LINE		**Power-Flo Matrix** *Above Ground Pump with 6' cord*	
	HPPSP1592	SP1592	1 HP 115V 1.5 Port Size
	HPPSP1593	SP1593	1.5 HP 115V 1.5 Port Size

With the push of a button, this versatile above ground pump changes from a vertical to a horizontal discharge—and back again.

All items cataloged are normally stocked unless noted.

Not Stocked While Supplies Last

Code	New Product Number	Old Product Number	Description
			Variable Speed Pumps
	HPPSP32950VSP	SP32950VSP	TriStar VS 950 Variable Speed Pump 2.7 THP, 230v. Expert Line
	HPPSP32900VSP	SP32900VSP	TriStar VS 900 Variable Speed Pump 1.85 THP, 230v. -Expert Line 3 Year Warranty • Fully Programmable and Rotational Digital Interface includes a 24-hour clock with up to 8 custom timer functions. • 2" x 2.5" Union Connections • A separate base (SPX3200SR) is available to align with Sta-Rite, Max-E-Pro, Max-E-Glas, or Dura-Glas
	HPPSP2670020VSP	SP2670020VSP	Super Pump VS700 Variable Speed 1.65HP 230V - Expert Line

TriStar VS

BRICK AND MORTAR NO INTERNET SALES

			VS with OmniLogic	

Super Pump VS 700 Omni

MaxFlo VS 500 Omni

				Port Size
CALL	HPPHL32950VSP	HL32950VSP	TriStar VS 950 Pump w/ Omni Control - 2.70 THP, 230V	(2" x 2.5")
CALL	HPPHL32900VSP	HL32900VSP	TriStar VS 900 Pump w/ Omni Control - 1.85 THP, 230V	(2" x 2.5")
	HPPHL2670020VSP	HL2670020VSP	SuperPump VS 700 Pump w/ Omni Control - 1.65 THP, 230V	(1.5")
	HPPHL2350020VSP	HL2350020VSP	MaxFlo VS 500 Pump w/ Omni Control - 1.65 THP, 230V	(1.5" x 2")
OmniLogic daughter board needed for AquaRite chlorine generator compatibility				
	HPPHLAQRPCB	HLAQRPCB	AquaRite Omni PCB Kit - Omni Daughter board for existing AquaRite installations	

			Add on Salt Cells for OmniLogic
	HPPAQR925	AQR925	Aqua Rite 900 with 25,000 Gallon Extended Life Turbo Cell
	HPPAQR940	AQR940	Aqua Rite 900 with 40,000 Gallon Extended Life Turbo Cell

All items cataloged are normally stocked unless noted.
Not Stocked While Supplies Last

QUALITY POOL SUPPLY

Code	New Product Number	Old Product Number	Description			
PENTAIR			**Max-E-Pro®** Includes Union connectors - 6" Trap Port Size 2" x 2"			
	PEN348185	348185	1.10 THP	115/208-230	SF - 1.0	TEFC Motor
	PENP6E6C204L	P6E6CL	.5 HP	115/230	SF-1.95	Full-Rated
	PENP6E6D205L	P6E6DL	.75 HP	115/230	SF-1.65	Full-Rated
	PEN348150	348150	1 HP	115/208-230V	SF-1.65	TEFC Motor
	PENP6E6G208L	P6E6GL	2 HP	230	SF-1.30	Full-Rated
	PENP6E6H209L	P6E6HL	3 HP	230	SF-1.15	Full-Rated
	PENPKG188	PKG188	2" Slip Unions for above (Package of 2)			
PENTAIR			**WhisperFlo™** 2" Suction & Discharge			
	PEN015583	015583	1.10 THP	115/208-230V	SF-1.0	
	PEN011771	011771	.75 HP	115/208-230V	SF-1.24	
	PEN011772	011772	1 HP	115/208-230V	SF-1.24	
PENTAIR			**SuperFlo®** Direct Replacement for the Hayward Super Pump. Includes two unionized fittings (1½" slip/2" spigot) for simple replacement.			
	PEN348190	348190	1.10 THP	115-208-230V	SF-1.0	
	PEN340037	340037	.75 HP	115/208-230V	SF-1.25	
	PEN350157	350157	Union Kit for SuperFlo®			

All items cataloged are normally stocked unless noted.

Not Stocked While Supplies Last

Code	New Product Number	Old Product Number	Description
PENTAIR			**SuperMax® High Performance** Updated with the first and only single speed pump to use NEMA Premium® Efficient motors for pool applications. 1½" x 2" Unions
	PEN348191	348191	1.10 THP 115/208-230V SF 1.0
	PEN351157	351157	Union Kit, 1½" Slip X 2" Spigot
PENTAIR			**Max-E-Pro 3-Phase** High Efficiency Pool / Spa Pump Energy Efficient Single Speed. TEFC Super Duty Motor. Quick-Lock trap for fast access. Port Size (2" x 2")
	PEN345076	345076	1 HP 208-230/460V SF-1.65
	PEN345077	345077	1.5 HP 208-230/460V SF-1.47
	PEN345078	345078	2 HP 208-230/460V SF-1.30
	PEN345079	345079	3 HP 208-230/460V SF-1.15
PENTAIR			**Dynamo Above-Ground** Port Size 1½"
	PEN340194	340194	.75 HP 115V 3' cord
	PEN340197	340197	1 HP 115V 3' cord
	PEN340210	340210	1.5 HP 115V 3' cord

QUALITY POOL SUPPLY

Code	New Product Number	Old Product Number	Description
PENTAIR TRADEGRADE BY PENTAIR			**Pentair/StaRite VS Pumps**
STA-RITE®			**IntelliPro® VSF - Variable Speed & Flow Pump** Compatible with Pentair Automation, 8 programmable speed or flow settings and built-in timer, Top-mounted field wiring compartment.
	PEN013004	013004	3 HP 230 V 2" Port Size 1.32 SF
PENTAIR			**SuperMax® VS - Variable Speed Pump** 110/230V and 50/60 Hz capability, Ideal for standard pools requiring up to 1.5 HP pump. Three operating speed settings plus override capability.
	PEN343001	343001	1.5 HP 115/208-230 V 1½" Port Size 1.46 SF
PENTAIR			**IntelliFlo VSF** Control keypad can be rotated for convenient orientation on the pump or wall mounted with Relocation Kit. Compatible with Pentair automation. Top-mounted field wiring compartment 2" x 2" Port Size.
	PEN011056	011056	Up to 3 HP Capability, Variable Speeds and flow, 230V SF -1.32
PENTAIR			**IntelliFloXF® VSF** Same as above except: 2.5" and 3" Union connections included
	PEN022056	022056	Up to 3 HP Capability, Variable Speeds and flow, 230V SF -1.32
PENTAIR			**SuperFlo® VS** Ideal for standard pools requiring up to 1.5 HP pump. 110/230V and 50/60 Hz capability. 2" x 2" Port Size
	PEN342002	342002	Variable Speeds SF-1.46 115/208 - 230V
PENTAIR			**IntelliFlo® VS + SVRS** No SVRS calibration required. Protection cannot be disabled. Safety lock-out feature. 8 changeable speeds (ranging from 1100 to 3450 RPMs). Built-in diagnostics protect against common causes of premature pump damage or failure. 2" x 2" Port Size
	PEN011057	011057	Up to 3 HP Capability, Variable Speeds 230V SF-1.32
	PENPA220GF	PA220GF	2 Pole 20 Amp GFCI (can be used with any pool pump requiring GFCI)

All items cataloged are normally stocked unless noted.

Not Stocked While Supplies Last

Code	New Product Number	Old Product Number	Description			
		Commercial Pumps				
		D Series™ Key Features • Drain port provided for east winterizing • Normal wear parts are easily accessible for service and replacement without disturbing piping or mounting • Heavy-duty motors are designed for continuous operation				
CALL	PENDMH	DMH	3 HP	230V	1 phase (High Head)	2" Port Size
		DMH3	3 HP	230/460V	3 phase (High Head)	2" Port Size
CALL	PENDMJ172	DMJ	5 HP	230V	1 phase (Medium Head)	2½" Port Size
CALL	PENDMJ3172	DMJ3	5 HP	230/460V	3 phase (Medium Head)	2½" Port Size
		Traps for D Series				
CALL	PENPKG51	PKG51	6" Cast Iron Trap, 2" suction with basket			
CALL	PENPKG76	PKG76	Flange for remote trap			
CALL	PENPKG98	PKG98	8" Cast Iron Trap, 3" suction with basket			
		WhisperFloXF® High Performance Pumps • Can be used as a replacement for D-Series pumps • Union connectors included for 2½" or 3" plumbing				
		Three-Phase TEFC Super-Duty				
CALL	PEN022018	022018	XFK-12	3 HP	208-230V/460V	SF-1.15
CALL	PEN022019	022019	XFK-20	5 HP	208-230V/460V	SF-1.00

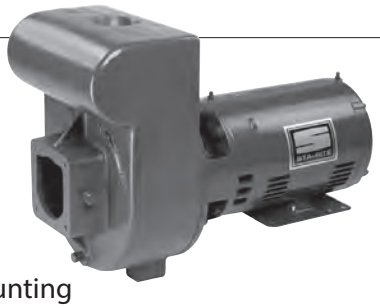

All items cataloged are normally stocked unless noted.
Not Stocked While Supplies Last

QUALITY POOL SUPPLY

Code	New Product Number	Old Product Number	Description				
			Commercial Pumps				
			CSP/CCSP Series™ **Commercial Self-Priming Pump**				
CALL	PENCSPHK3142	CSPHK3	7.5 HP	230/460V	SF-1.25		
CALL	PENCSPHL3143	CSPHL3	10 HP	230/460V	SF-1.25		
CALL	PENCSPHM3144	CSPHM3	15 HP	230/460V	SF-1.25		
	PENCSPHN3145	CSPHN3	20 HP	230/460V	SF-1.25		
	PENPKG184	PKG184	Trap with 1100 Cu.In. Basket				
			EQ Series® **Commercial Plastic** (with hair & lint strainer) Drop-in replacement for C Series 6" Suction & 4" Discharge All EQ pumps below are rated at SF-1.15				
CALL	PEN340030	340030	EQ500	5 HP	1 Phase	230V	19.6A
CALL	PEN340033	340033	EQK750	7.5 HP	3 Phase	208-230/460V	20.1/18.3/9.1A
	PEN340034	340034	EQK1000	10 HP	3 Phase	208-230/460V	27.1/24.3/12.2A
	PEN340035	340035	EQK1500	15 HP	3 Phase	208-230/460V	40/36/17.8A
CALL	PEN357184	357184	Replacement strainer basket for above				

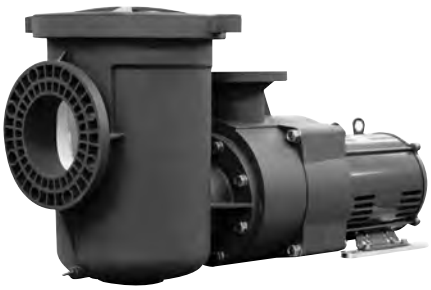

All items cataloged are normally stocked unless noted.

Not Stocked While Supplies Last

Code	New Product Number	Old Product Number	Description
RELIANT®			**Reliant Above Ground Pumps**
	BCIP1410	P1410	1 HP Above Ground Pump
	BCIP1415	P1415	1.5 HP Above Ground Pump
Waterway™			**Waterway SMF Replacement Pumps** • 2" unionized intake/discharge • One piece pot and volute for noise reduction • Adjustable bases (included) allow pump to adapt to existing plumbing from Super Pumps, Dura-Glas Pumps, and Dura-Glas II Pumps. • Includes swivel unions
	WWPSMF110	SMF-110	1.0 HP 115/230V
	WWPSMF115	SMF-115	1.5 HP 115/230V

All items cataloged are normally stocked unless noted.
Not Stocked While Supplies Last

QUALITY POOL SUPPLY

Code	New Product Number	Old Product Number	Description
		Circulating Pumps	
	WWP34100201E	3410020-1E	Iron Might ⅛ HP 1 Speed 48 Frame - 230V Side Discharge
	WWP34100301E	3410030-1E	Iron Might 1/15 HP 1 Speed 48 Frame - 115V Side Discharge
	AQPAF25930002010	02593000-2010	1/15 HP Center Discharge 115V 1-Speed
	AQPAF25930012010	02593001-2010	1/15 HP Center Discharge 230V 1-Speed
	RSCLP74179	LP7417.9	115V** ¾" Barbs, Includes Mini J&J Cord (Used on Royal Spas until 2008 change over)
	RSCLP73658	LP7365.8	230V** ¾" Barbs, Includes Mini J&J Cord (Used on Royal Spas AFTER 2008 change over. If the Royal Spa in question is a 2008 model, you must first determine the voltage before ordering.)
	HDQ100120K	73989	115V ¾" Barbs, 4' Cord with blank ends
	HDQ100121K	73979	230V ¾" Barbs, 4' Cord with blank ends
	HDQ100124	74009	115V ¾" Male Pipe Thread, 4' Cord with blank ends
	HDQ100122K	74069	115V 1" Barbs, 4' Cord with blank ends
	HDQ100123K	74079	230V 1" Barbs, 4' Cord with blank ends
	HDQ100135	10-0135	Grundfos Series 43 Circ Pump 230V, 1" Barbed
	HDQ100134A	10-0134A	Grundfos Circ Pump Kit 115V, ¾" and 1" Barbed

All items cataloged are normally stocked unless noted.

Not Stocked While Supplies Last

Code	New Product Number	Old Product Number	Description			
		Spa Pumps				
		EX2 **2 Speed Spa Pumps - 2" Discharge**				
	WWP34206101U	3420610-1U	1.5 HP	115V	48 Frame	
	WWP34210211U	3421021-1U	2 HP	230V	48 Frame	
	WWP37208211W	3720821-1W	2 HP	230V	56 Frame	
	WWP34218211U	3421821-1U	3 HP	230V	48 Frame	
	WWP37216211W	3721621-1W	3 HP	230V	56 Frame	
	WWP4005570	400-5570	Replacement Union			
		Spa Flo Pump **2 Speed 48 Frame - 1½" Discharge**				
					AquaFlo Equivalent	
	WWP3420610S1Z	3420610-S1Z	1.5 HP	115V	FMHP-1.5	
	WWP3420620S1Z	3420620-S1Z	1.5 HP	230V	FMHP-1.5-230	
	WWP3420820S0Z	3420820-S1Z	2 HP	230V	FMHP-2	
		Executive Spa Pump **48 Frame - 2" Discharge**				
	WWP34116211A	3411621-1A	4 HP	230V	2" Intake	1 Speed
	WWP341162113	3411621-13	4 HP	230V	2½" Intake (used on Royal Spas & many others)	1 Speed
		56 Frame - 2" Discharge				
	WWP372162113	3721621-13	4 HP	230V	2½" Intake	2 Speed
	WWP37216211D	3721621-1D	4 HP	230V	2" Intake	2 Speed
		Center Discharge Spa Pump **2 Speed 48 Frame - 1½" Discharge**				
					AquaFlo Equivalent	
	WWP342031015	3420310-15	.75 HP	115V	FMCP-.75	
	WWP342041015	3420410-15	1 HP	115V	FMCP-1	
	WWP342061015	3420610-15	1.5 HP	115V	FMCP-1.5	
	WWP342062015	3420620-15	1.5 HP	230V	FMCP-1.5-230	
	WWP342082015	3420820-15	2 HP	230V	FMCP-2	

All items cataloged are normally stocked unless noted.
Not Stocked While Supplies Last

Code	New Product Number	Old Product Number	Description
			Cover Pumps
	SRP91875	SUP91875	½ HP Main Drain Utility Pump-All-Stainless Steel • 25' Power Cord • 5580 GPH • Fits inside most 8" pool drains
	SRP92395	SUP92395	Automatic Pool Cover Pump • 2100 GPH @ 0' Head • Internal Vertical Float Switch • Activates in 1½" of water
	SRP91335	SUP91335	⅓ HP Thermoplastic Submersible Utility Pump • 25' Cord • 40 GPM
	SRP91505	SUP91505	½ HP Cast Iron Submersible Utility Pump • 25' Cord • 70 GPM
	SRP90091	SUP90091	Manual Above Ground Cover Pump • 25' Cord • 800 GPH

All items cataloged are normally stocked unless noted.

Not Stocked While Supplies Last

Code	New Product Number	Old Product Number	Description
Little Giant		**Submersible and Cover Pumps**	
	LGW577301	APCP-1700	**Cover Pump** Weight 11.1 lbs. ⅓ HP, 25' Cord, 1,700 GPH @ 1' head Garden hose connection. Removable intake screen for easy cleaning. Integral float switch activates in 2" of water. Built in handle.
	LGW505025	5-MSP	**Utility & Cover Pump** ⅙ HP, 25' Cord, 1,200 GPH @ 1' head Pumps down to ⅛", thermal overload protected, 1" FPT or garden hose connection. Weight 8.75 lbs.
	LGW506271	6-CIM-R	**Big John Utility Pump** ⅓ HP, 10' Cord, 2,700 GPH @ 5' head. Cast iron housing, polypropylene base, thermal overload protected, 1-½" FPT, 1-¼" & garden hose adaptors. 1" FPT or garden hose connection. Weight 18 lbs.
	LGW500203	500203	Submersible 1-A Pump Oil filled, Direct Drive 1/200 HP
	LGW177343	177343	Garden Hose Adapter for APCP-1700 and 5-MSP
RED LION		**Semi-Trash Pump**	
	LGW617038	6RLAG-3LST	**Red Lion** 6 HP 3" Aluminum Pump
	LGW3HKM	3HKM	3" Suction/Discharge Kit with Steel Strainer

APCP-1700

5-MSP

6-CIM-R

Motor Repair Kits

Pump repair kits include housing gasket, diffuser gasket, lid gasket, and motor seal

AQPAPCK1001	GK1	Hayward	Max-Flo 1800 - 2800
AQPAPCK1013	GK2	Hayward	Super II 3000 - 3000X
AQPAPCK1024	GK3	Hayward	Super 1600, 2600, 2600X
AQPAPCK1057	GK6	Sta-Rite	Maxi-Glas or Pre-1998 Dura-Glas
AQPAPCK1004	GK12	Hayward	Turbo Flo 2000 or Power Flo 1500
AQPAPCK1007	GK14	Jacuzzi	Magnum
AQPAPCK1051	GK54	Sta-Rite	Dura-Glas or 1998-Present

Code	New Product Number	Old Product Number	Description

AST125

ASQ125

Aqua Shield Motor Cross Reference

NEW Aqua Shield Number	Up-Rated US Motors Number	Full-Rated US Motors Number
ASQ095	EUSQ1072	ESQ1052
ASQ125	EUSQ1102	ESQ1072
ASQ165	EUSQ1152	ESQ1102
ASQ225	EUSQ1202	ESQ1152
ASQ260	EUSQ1252	ESQ1202
AST095	EUST1072	EST1052
AST125	EUST1102	EST1072
AST165	EUST1152	EST1102
AST225	EUST1202	EST1152

			THP	FRAME	VOLTAGE	MOUNT
	NIDASQ095	ASQ095	0.95	48Y	115/230	Square Flange
	NIDASQ125	ASQ125	1.25	48Y	115/230	Square Flange
	NIDASQ165	ASQ165	1.65	48Y	115/230	Square Flange
	NIDASQ225	ASQ225	2.25	48Y	115/230	Square Flange
	NIDASQ260	ASQ260	2.60	48Y	230	Square Flange
	NIDAST095	AST095	0.95	56J	115/230	C-Face
	NIDAST125	AST125	1.25	56J	115/230	C-Face
	NIDAST165	AST165	1.65	56J	115/230	C-Face
	NIDAST225	AST225	2.25	56J	115/230	C-Face

All items cataloged are normally stocked unless noted.

Not Stocked While Supplies Last

EFFICIENCY EVOLVED

VGREEN EVO™ VARIABLE SPEED POOL PUMP MOTOR

THE POWER BEHIND THE PUMP™

- New simplified user interface allows for easier programming with the push of a button.
- Direct drop-in replacement, lightweight, compact motor design with enhanced rotatable wiring compartment for an easy installation.
- Variable speed design reduces noise and allows for quieter operation compared to single-speed motors.

www.regalrexnord.com
We create a better tomorrow by energy-efficiently converting power into motion™

Regal Rexnord, Century, The Power Behind the Pump, VGreen Evo and We create a better tomorrow by energy-efficiently converting power into motion are trademarks of Regal Rexnord Corporation or one of its affiliated companies.
© 2022 Regal Rexnord Corporation, All Rights Reserved. MCAD21020E • C0068E

All items cataloged are normally stocked unless noted.
Not Stocked While Supplies Last

INTRODUCING

VGreen Evo™

VGREEN EVO™ VARIABLE SPEED POOL PUMP MOTOR

THE POWER BEHIND THE PUMP™

PROGRAMMING

WITH THE PUSH OF

ONE BUTTON

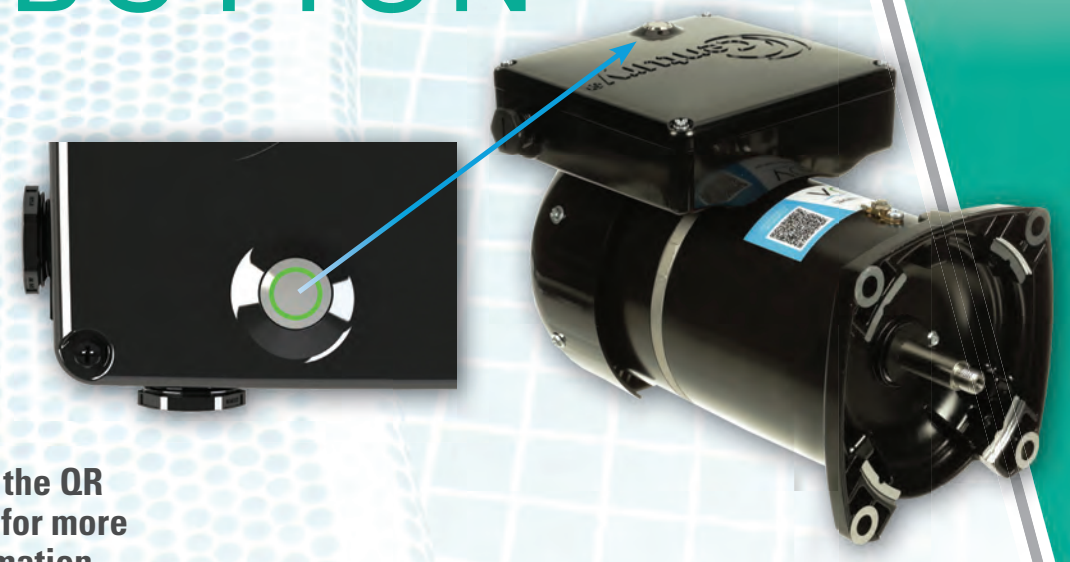

Scan the QR code for more information.

www.regalrexnord.com
Creating a better tomorrow™...

Regal Rexnord, Century, The Power Behind the Pump, VGreen Evo and Creating a better tomorrow are trademarks of Regal Rexnord Corporation or one of its affiliated companies.
© 2022 Regal Rexnord Corporation, All Rights Reserved. MCAD21020E • C0068E

Code	New Product Number	Old Product Number	Description

HST150

HSQ165

Century®
(Formerly A.O. Smith)

Centurion Pro Motor Cross Reference

NEW Centurion Pro Number	Up-Rated Century Motors Number	Full-Rated Century Motors Number
HSQ095	USQ1072	SQ1052
HSQ125	USQ1102	SQ1072
HSQ165	USQ1152	SQ1102
HSQ220	USQ1202	SQ1152
HSQ260	USQ1252	SQ1202
HST080	UST1072	ST1052
HST110	UST1102	ST1072
HST150	UST1152	ST1102
HST225	UST1202	ST1152
HST275	UST1252	ST1202

			THP	FRAME	VOLTAGE	MOUNT
	CRMHSQ095	HSQ095	0.95	48Y	115/230	Square Flange
	CRMHSQ125	HSQ125	1.25	48Y	115/230	Square Flange
	CRMHSQ165	HSQ165	1.65	48Y	115/230	Square Flange
	CRMHSQ220	HSQ220	2.20	48Y	230	Square Flange
	CRMHSQ260	HSQ260	2.60	48Y	230	Square Flange
	CRMHST080	HST080	0.80	56J	115/230	C-Face
	CRMHST110	HST110	1.10	56J	115/230	C-Face
	CRMHST150	HST150	1.50	56J	115/230	C-Face
	CRMHST225	HST225	2.25	56J	115/208-230	C-Face
	CRMHST275	HST275	2.75	56J	208/230	C-Face

* Keyed Shaft | ** Two Speed Motor | ***Threaded Shaft

QUALITY POOL SUPPLY

Century Replacement Motor Guide (Formerly A.O. Smith)

MODEL	HP	SERVICE FACTOR	FRAME	VOLTAGE	MOUNT
B127	¾	1.5	K56J	115/230	C-face
B128	1	1.4	L56J	115/230	C-face
B129	1 ½	1.3	N56J	115/230	C-face
B852	¾	1.25	P56Y	115/230	Square flange
B853	1	1.25	P56Y	115/230	Square flange
B122	1	1.4	L56C	115/230	C-face
B123	1 ½	1.3	N56C	115/230	C-face
BN24SS	¾	1.0	48Y	115	Thru bolt
BN25SS	1	1.0	48Y	115	Thru bolt
B625	¾	1.5	56CZ	115/230	Special
BN36**	¾	1.0	48Y	115	Thru bolt
BN37**	1	1.0	48Y	115	Thru bolt
BN50**	1 ½	1.0	48Y	115	Thru bolt
BN34**	1 ½	1.0	48Y	230	Thru bolt
BV90	1	1.0	48Y	115	Thru bolt
BV91***	1	1.0	48Y	115	Thru bolt
BN35SS	1 ½	1.0	48Y	115/230	Thru bolt
BN40SS	2	1.0	48Y	115/230	Thru bolt
BN51**	2	1.0	48Y	230	Thru bolt
BN61**	2	1.0	48Y	230	Thru bolt
BN62**	3	1.0	48Y	230	Thru bolt
USQ1052	½	1.3	48Y	115/230	Square flange
QC1052	½	1.9	48Y	115/230	Square flange
QC1072	¾	1.65	48Y	115/230	Square flange
QC1102	1	1.65	48Y	115/208-230	Square flange
SQ1302	3	1.15	56Y	230	Square flange
C218-177*	3	1.15	182JM	115/230	C-face
C218-179BD* (Baldor Motor)	3	1.15	3 ph	230/460	C-face
C218-180*	5	1.15	184JM	230	C-face
C218-182BD* (Baldor Motor)	5	1.15	182JM	3 ph 208-230/460	C-face
Q3072	¾	1.65	48Y	3 ph 208-230/460	Square flange
Q3102	1	1.65	48Y	3 ph 208-230/460	Square flange
Q3152	1½	1.47	48Y	3 ph 208-230/460	Square flange
Q3202	2	1.3	48Y	3 ph 208-230/460	Square flange
Q3302	3	1.15	56Y	3 ph 208-230/460	Square flange
SQS1102R**	1	1.65	48Y	230	Square flange
SQS1152R**	1½	1.47	48Y	230	Square flange
SQS1202R**	2	1.3	48Y	230	Square flange

All items cataloged are normally stocked unless noted.

Not Stocked While Supplies Last

Code	New Product Number	Old Product Number	Description

Century®

Replacement Motors

UST1202

BN34

		HP	Service Factor	Pump
	CRMST1202	ST1202	2	1.30	Hayward Super Pump/Super Pump II - Full Rated
	CRMB2852	B852	¾	1.25	Sta-Rite Dura-Glas, Pac Fab Challenger American Ultra Flo, Aqua Flo Dominator Hydrotech Whisper Flo, American Power Pump
	CRMB2853V1	B853	1	1.25	Same as B852
	CRMB127	B127	¾	1.50	Hayward Maxi-Flo, Baker Hydro Hydron Am. Products Americana, Hydrotech Marlow Argonaut, Speck Pumps Jacuzzi Plastic (Threaded Shaft)
	CRMB128	B128	1	1.40	Same as B127
	CRMB129	B129	1½	1.30	Same as B127
	CRMB625	B625	¾	1.50	Polaris Booster Pump
	CRMB122	B122	1	1.40	Jacuzzi Bronze (Keyed Shaft), Polaris Vac Sweep Pac Fab Hydro Pump, Premier, Aqua Flo C
	CRMBV90	BV90	1½	1.30	Doughboy, Lomart, and Hoofinger Right Hand Thread, Rotation-Clockwise

Above Ground Pool & Spa Motors

		HP	Service Factor	Pump	Volt
	CRMBN24V1	BN24SS	¾	1.0	For many Above Ground Pool Pumps & Jetted Tubs including Hayward Power-Flo - SS shaft	
	CRMBN25V1	BN25SS	1	1.0	Same as BN24SS but with 1HP	115V
	CRMBN35V1	BN35SS	1½	1.0	AG Pool & Spa 1-speed - SS shaft	115/230V
	CRMBN40SS	BN40SS	2	1.0	AG Pool & Spa 1-speed - SS shaft	115/230V
	CRMBN34V1	BN34	1	1.0	Aqua Flo 2-speed	230V
	CRMBN36	BN36	¾	1.0	Aqua Flo 2-speed	115V
	CRMBN37V1	BN37	1	1.0	Aqua Flo 2-speed	115V
	CRMBN50V1	BN50	1½	1.0	Aqua Flo 2-speed	115V
	CRMBN51	BN51	2	1.0	Spa 2-speed	230V
	CRMBN61	BN61	2	1.0	Spa 2-speed	230V
	CRMBN62	BN62	3	1.0	Spa 2-speed	230V

QUALITY POOL SUPPLY

Code	New Product Number	Old Product Number	Description			
Century® UL Listed		Spa Motors				

USQ1052

			HP	Waterway #	Pump	Volt
	CRMB2233	B233	2	3721021	56 Frame, 2 Speed	230V
	CRMB2234	B234	3	3721421	56 Frame, 2 Speed	230V
	CRMSPL	B236	5	3722021	56 Frame, 2 Speed	230V

Replacement Motors for Sta-Rite Pumps

			HP	Service Factor	Sta-Rite Pump Series	Sta-Rite Number
	CRMUSQ1052	USQ1052	½	1.3	P2RA, CK & CRA	A100CLL
	CRMQC1052	QC1052	½	1.9	PE	AE100CHL
	CRMQC1072	QC1072	¾	1.65	PE	AE100DHL
	CRMQC1102	QC1102	1	1.65	PE	AE100EHL
	CRMSQ1302V1	SQ1302	3	1.15	PE	AE100HHL
	CRMBN24V1	BN24SS	¾	1.0	JS, JW	AS920DLL
	CRMBN25V1	BN25SS	1	1.0	JS, JW	AS920ELL
	CRMBN35V1	BN35SS	1½	1.0	JS, JW	AS920FLL
	PENC218177	C218-177	3	1.15	D Series - 1 Phase	
	PENC218179BD	C218-179BD	3	1.15	D Series - 3 Phase	
	PENC218180	C218-180	5	1.15	D Series - 1 Phase	
	PENC218182BD	C218-182BD	5	1.15	D Series - 3 Phase	

			HP	Service Factor	Volt	Sta-Rite Number
	CRMQ3072	Q3072	¾	1.65	230/460V - 3 Phase	AP100DH
	CRMQ3102	Q3102	1	1.65	230/460V - 3 Phase	AP100EH
	CRMQ3152	Q3152	1½	1.47	230/460V - 3 Phase	AP100FH
	CRMQ3202	Q3202	2	1.3	230/460V - 3 Phase	AP100GH
	CRMQ3302V1	Q3302	3	1.15	230/460V - 3 Phase	AP100HL

2-Speed Full Rated Motors

			HP	Service Factor	Sta-Rite Pump Series	Sta-Rite Number
	CRMB121	SQS1102R	1	1.65	P2RA5YFL	A100FLL-Y
	CRMSQS1152R	SQS1152R	1½	1.47	P2RA5YGL	AE00GLL-Y
	CRMSQS1202R	SQS1202R	2	1.3	P2RA5YHL	AE00HLL-Y

All items cataloged are normally stocked unless noted.

Not Stocked While Supplies Last

Benefits of U.S. Motors

- Epoxy encapsulated armiture
- Easy switch toggle from 120v to 240v
- Angled terminal board for easier access
- Electrostatically painted inside & out to protect from corrosion
- High quality seals & protective ring for additional water defense

Code	New Product Number	Old Product Number	Description			
			HP	Service Factor	Pump	
	NIDASB127	EB127	.75	1.50	Hayward Maxi-Flo, Baker Hydro Hydron, Am. Products Americana, Hydrotech, Marlow Argonaut, Speck Pumps,Jacuzzi Plastic (Threaded Shaft)	
	NIDASB128	EB128	1	1.40	Same as EB127	
	NIDASB129	EB129	1.5	1.30	Same as EB127	
	NIDEB853	EB853	1	1.25	Sta-Rite Dura-Glas, Pac Fab Challenger American Ultra Flo, AquaFlo Dominator, Hydrotech WhisperFlo, American Power Pump	
	NIDAGL10FL1	EZBN25	1	1.0	For many Above Ground Pool Pumps & Jetted Tubs including Hayward Power-Flo	
	NIDAGH15FL2CS	EZBN34	1.5/.18	1.0	Aqua Flo (2-speed) (230 Volt Only)	
	NIDAGL10FL2S	EZBN37	1/.12	1.0	Aqua Flo (2-speed)	
	NIDAGL15FL2CS	EZBN50	1.5/.25	1.0	Aqua Flo (2-speed)	
	NIDSPH20FL2CS	EZBN51	2/.25	1.0	Spa, 2-speed, 230V	
	NIDSPH30FL2S	EZBN62	3/.38	1.0	Spa, 2-speed, 230V	
	NIDEV115	EV115	1/15	1.0	AquaFlo Circ Master, Waterway Iron Might (115V 48 frame)	
		Variable Speed Motors				
CALL	NIDAVSS3	AVSS3	3.0	1.15	Square Flange, 230V, 56Y Frame	
	NIDAVSJ3	AVSJ3	3.0	1.15	C-Flange, 230V, 56J Frame	

All items cataloged are normally stocked unless noted.
Not Stocked While Supplies Last

QUALITY POOL SUPPLY

Code	New Product Number	Old Product Number	Description
		Shaft Seals	
		We have shaft seals for many pumps not cataloged here. Call with pump (not motor) model number.	AS-4702KIT
	AQPAPCAS100	AS-100	Dura-Glas, Max-E-Glas (U109-93SS) Pre 1998 Swimquip P61, Baker Hydro MI-29-3
	AQPAPCAS200	AS-200	Pac Fab (35-4545), Doughboy, Swimquip, Dura-Glas,Max-E-Glas (17304-0100S), Aquaflo Flowmaster (1995 - present)
	AQPAPCAS201	AS-201	Swimquip, Jacuzzi, Pac Fab, Marlow, Sta-Rite (U109-358SS), Hayward (SPX1250XZ2, SPX1600Z2) bagged.
	AEQAS358	AS-358	Jacuzzi (10-479)
	AEQAS359	AS-359	Jacuzzi (10-478, 10-1202, 10-1506)
	AEQAS360	AS-360	Purex "C"series (P28175)
	AEQAS372	AS-372	Hayward (SPX0125Z2)
	AEQAS501	AS-501	Aladdin Pump Seal - Carded Replaces AS-1212
	AEQAS642	AS-642	Doughboy (1128-1006)
	AQPAPCAS1000	AS-1000	Polaris (P55), Hayward (SPX1720KA), Purex AJ Series, Sta-Rite Bronze, Swimrite, Waterway, Baker Hydro Hydron
	AEQAS1521	AS-1521	Hayward Super Pump (SPX1600Z2) Carded
	AEQAS3890	AS-3890	Hayward (SPX3200SA), Jandy (R0479400)
	AEQAS4702KIT	AS-4702KIT	Hayward (SPX1500KA), Aqua Flo Flowmaster (pre-1995)
		Miscellaneous Motor Parts	
	NIDB45744178K70L	6203	Bearing 17mm - (Replaces U18-1161)
	AEQ6204	6204	Bearing 20mm - (Replaces U18-271)
	PENU18525	U18-525	Start Capacitor (⅓, ½, ¾ HP) 161 - 193 MFD
	PENU18526	U18-526	Start Capacitor (1,1.5 HP) 124 - 138 MFD
		P.R.O. Box 3 replacement Pump Seal Assemblies The P.R.O. Box 3 Service Kit allows the pool and spa professional to make most pump seal replacements by combining just a few different "heads" and "seats." These are replacement heads and seats to replenish the kit.	
		PROBOX3	30 Seal assemblies with parts to spare
	AEQPRO3A	PRO3-A	Seal head "A"
	AEQPRO3B	PRO3-B	Seal head "B"
	AEQPRO3C	PRO3-C	Seal head "C"
	AEQPRO31	PRO3-1	Seal seat "1"
	AEQPRO32	PRO3-2	Seal seat "2"
	AEQPRO33	PRO3-3	Seal seat "3"

All items cataloged are normally stocked unless noted.

Not Stocked While Supplies Last

Code	New Product Number	Old Product Number	Description

Aladdin Pump Baskets

			OEM Name	OEM No.	Top	Bottom	Deep
	AEQB101	B-101	PacFab	35-5622	4 9/16	3 3/4	4 3/4
	AEQB106	B-106	Sta-Rite	C108-33P	4 9/16	3 3/4	5 1/8
	AEQB118	B-118	Hayward	SPX0145RA	5 13/16	4 9/16	6 1/4
	AEQB127	B-127	Marlow	31660	3 11/16	3 1/2	4 9/16
	AEQB167	B-167	Hayward	SPX1600M	6 1/8	4 13/16	6
	AEQB169	B-169	Hayward	SPX1250RA	3 13/16	3 7/16	5
	AEQB170	B-170	PacFab	353312	5 1/4	4 7/8	4 9/16
	AEQB176	B-176	Marlow	25774	5 9/16	5 1/4	5 5/8
	AEQB177	B-177	Amer. Products	393004	6 1/16	4 5/8	5 1/8
	AEQB187	B-187	Swimquip	16200-0XL6	4 1/4	3 9/16	5 3/16
	AEQB188	B-188	Swimquip	16200-7XL6	4 1/4	3 9/16	6 1/8
	AEQB207	B-207	Hayward	SPX3000M	5 3/4	4	8 3/4
	AEQB214	B-214	Seasonmaster	SMS004	7 5/16	4 3/16	3

PENTAIR Pump Baskets

Pentair Replacement Baskets

			OEM Name	Model	Top	Bottom	Deep
	PEN516112	516112	Pentair	Bermuda Skimmer	8 1/4	5 1/2	5 3/8
	PEN355318Z	355318	Pentair	Challenger Pump			
	PEN164010030	16401-0030	Sta-Rite		7 7/8	6 7/8	6 3/4
	PEN162000009	16200-0009	Sta-Rite		5 1/4		
	PEN169200017	16920-0017	Sta-Rite		5 7/16	4 3/4	7 5/16
	PEN164010102	16401-0102	Sta-Rite				
	PENC858PZ	C8-58P	Sta-Rite	DynaGlas, DuraGlas II	5 15/16	4 11/16	7 5/16

All items cataloged are normally stocked unless noted.
Not Stocked While Supplies Last

QUALITY POOL SUPPLY

HAYWARD®

Super Pump

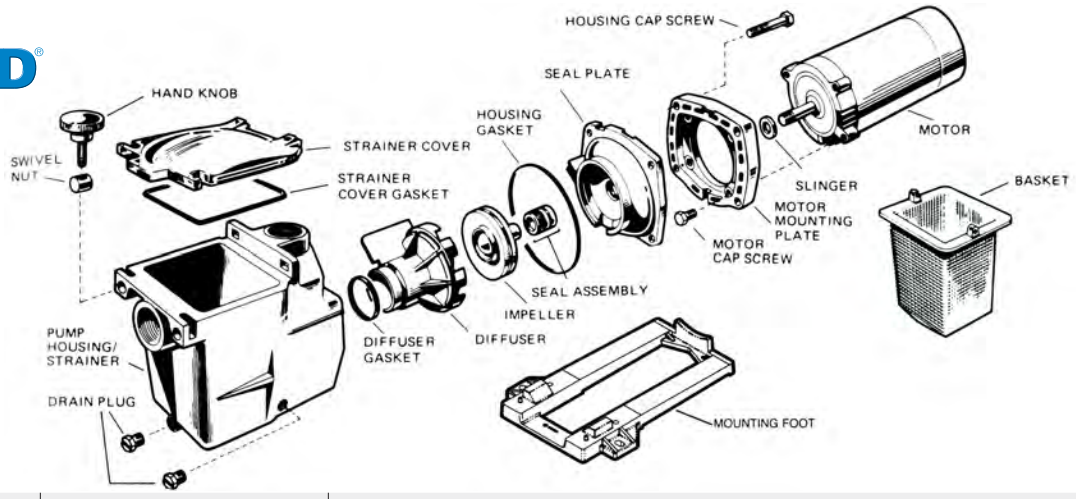

Code	New Product Number	Old Product Number	Description
	HPPSPX1600AA	SPX1600AA	Pump Housing/Strainer 1½"
	HPPSPX1620AA	SPX1620AA	Pump Housing/Strainer 2" with Drain Plugs
	HPPSPX1600T	SPX1600T	Housing Gasket (Can substitute G-95)
	AQPAPCG3426	G-95	Housing Gasket
	HPPSPX1600R	SPX1600R	Diffuser Gasket
	HPPSPX1600D	SPX1600D	Strainer Cover, Clear Lexan
	AQPAPCO2036	O-177	Strainer Cover Gasket (replaces SPX1600S)
	HPPSPX1600S	SPX1600S	Strainer Cover Gasket (Hayward OEM Part)
	HPPSPX1600M	SPX1600M	Basket - use B-167, See Page 132
	HPPSPX1600PN	SPX1600PN	Hand Knob & Swivel Nut
	HPPSPX1600V	SPX1600V	Drain Plug ¼" (1991 & Prior)
	HPPSPX1700FG	SPX1700FG	Drain Plug ¼" with Gasket (newer pumps)
	HPPSPX2600G1	SPX2600G1	Mounting Foot Assembly with Screws & Adapter
	HPPSPX1600Q	SPX1600Q	Mounting Leg Adapter
	HPPSPX1600F5	SPX1600F5	Motor Mounting Plate
	HPPSPX1600Z2	SPX1600Z2	Seal Assembly
	HPPSPX1600Z4	SPX1600Z4	Housing Cap Screw
	HPPSPX0125Z44	SPX0125Z44	Motor Cap Screw
	HPPSPX0125F	SPX0125F	Water Slinger
	HPPSPX2600B	SPX2600B	Diffuser For ⅓ thru 1.5 HP Up-Rated or ½ thru 2 HP Max Rated Pump
	HPPSPX1616B	SPX1616B	Diffuser For 2 HP Up-Rated or 2½ HP Max Rated Pump
	HPPSPX1600SKIT1	SPX1600SKIT1	Seal Plate Kit for ⅓ HP - 1½ HP Includes Seal & Mounting Plate, Shaft Seal
	HPPSPX1600SKIT2	SPX1600SKIT2	Seal Plate Kit For 2 HP Includes Seal & Mounting Plate, Shaft Seal
	HPPSPX2600C	SPX2600C	Impeller For ⅓ HP (½ HP for Max Rated Pump)
	HPPSPX2605C	SPX2605C	Impeller For ½ HP (¾ HP for Max Rated Pump)
	HPPSPX2607C	SPX2607C	Impeller For ¾ HP (1 HP for Max Rated Pump)
	HPPSPX2610C	SPX2610C	Impeller For 1 HP (1.5 HP for Max Rated Pump)
	HPPSPX2615C	SPX2615C	Impeller For 1.5 HP (2 HP for Max Rated Pump)
	HPPSPX1621C	SPX1621C	Impeller For 2 HP (2.5 HP for Max Rated Pump)
		Kits	
	HPPSPX2600CKIT	SPX2600CKIT	1/2 HP Drive Train Upgrade Max Rated (⅓ HP for reg. pump)
	HPPSPX2605CKIT	SPX2605CKIT	3/4 HP Drive Train Upgrade Max Rated (½ HP for reg. pump)
	HPPSPX2607CKIT	SPX2607CKIT	1 HP Drive Train Upgrade Max Rated (¾ HP for reg. pump)
	HPPSPX2610CKIT	SPX2610CKIT	1.5 HP Drive Train Upgrade Max Rated (1 HP for reg. pump)
	HPPSPX2615CKIT	SPX2615CKIT	2 HP Drive Train Upgrade Max Rated (1.5 HP for reg. pump)
		Kits include: Impeller, Diffuser, Seal Plate, Housing Gasket and Diffuser Gasket	

All items cataloged are normally stocked unless noted.

Not Stocked While Supplies Last

HAYWARD®

Power-Flo

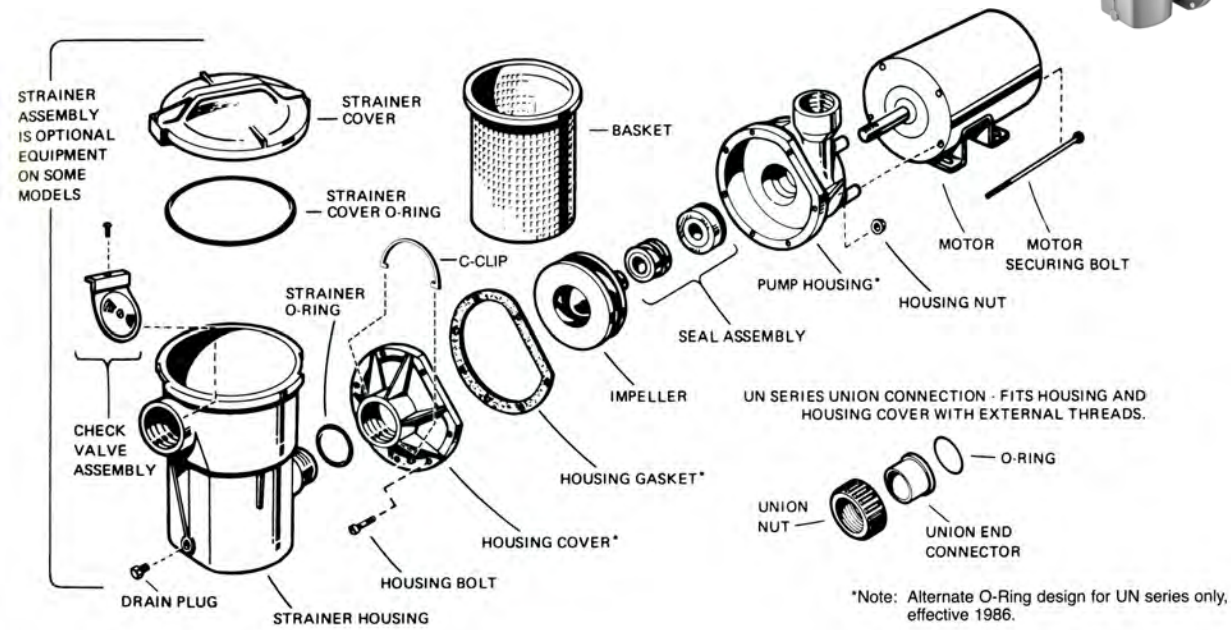

Code	New Product Number	Old Product Number	Description
	HPPSPX1500AA	SPX1500AA	Pump Housing
	HPPSPX1500B	SPX1500B	Housing Cover
	HPPSPX1500KA	SPX1500KA	Seal Assembly with Cup
	AQPAPCG3391	G-64P	Housing Gasket
	HPPSPX1500N2	SPX1500N2	Housing Bolt, No. 10-24 Hex. Head
	HPPSPX1500Y2	SPX1500Y2	Housing Nut, No. 10-24 Hex.
	HPPSPX1500E	SPX1500E	Impeller (refer to part number on original equipment)
	HPPSPX1500F	SPX1500F	Impeller (refer to part number on original equipment)
	AEQO139	O-139	Strainer Cover O-Ring- for solid cover (1978 and prior)
	HPPSPX1500D2A	SPX1500D2A	Strainer Cover, with O-Ring
	HPPSPX1500P	SPX1500P	Strainer Cover O-Ring (can substitute with O-231)
	AEQO231	O-231	Strainer Cover O-Ring
	HPPSPX1250RA	SPX1250RA	Strainer Basket (1992 and prior)
	HPPSPX1500LX	SPX1500LX	Strainer Basket- Large, 4½" x 7"
	HPPSPX1500RA	SPX1500RA	Check Valve Assembly (1990 and prior)
	HPPSPX1500W	SPX1500W	Strainer O-Ring (can be substituted with O-128)
	AEQO128	O-128	Strainer O-Ring
	HPPSPX1700FG	SPX1700FG	Drain Plug with Gasket
	HPPSPX1500X1	SPX1500X1	Shim for vertical discharge (1999 and prior)
	HPPSPX1515C	SPX1515C	Strainer Housing C-Clip (2000-2003)
	HPPSPX1515CN	SPX1515CN	Strainer Housing C-Clip (2004-Current)
	HPPSPX1500L	SPX1500L	Impeller, 1 HP (SP1500UN)
	HPPSPX1495Z1	SPX1495Z1	O-Ring, End Connector (can be substituted with O-41) (SP1500UN)
	AEQO41	O-41	O-Ring, End Connector (SP1500UN)

QUALITY POOL SUPPLY

Code	New Product Number	Old Product Number	Description

HAYWARD

Power-Flo LX

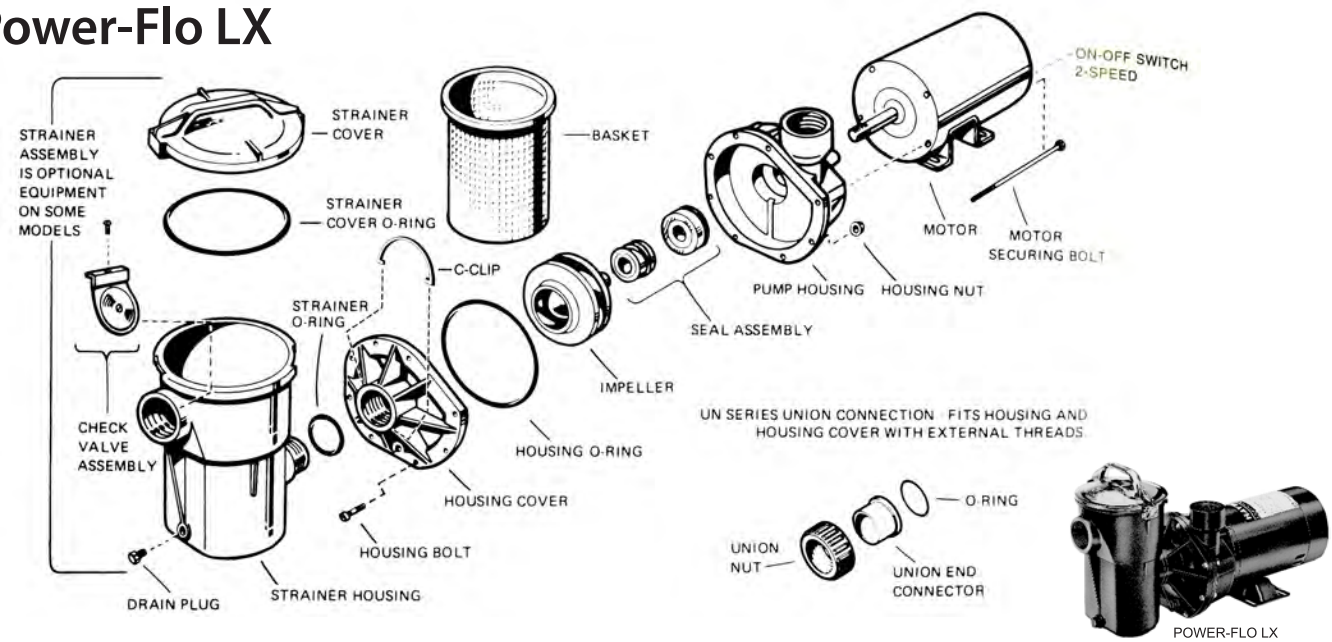

	HPPSPX1580AAP	SPX1580AAP	Pump Housing
	HPPSPX1580BP	SPX1580BP	Housing Cover
	HPPSPX1500KA	SPX1500KA	Seal Assembly with Cup
	HPPSPX1580Z1	SPX1580Z1	Housing O-Ring (can be substituted with O-299)
	AEQO299	O-299	Housing O-Ring
	HPPSPX1500N2	SPX1500N2	Housing Bolt, No. 10-24 Hex. Head
	HPPSPX1500Y2	SPX1500Y2	Housing Nut, No. 10-24 Hex.
	HPPSPX1500F	SPX1500F	Impeller (refer to part number on original equipment)
	HPPSPX1500L	SPX1500L	Impeller (refer to part number on original equipment)
	HPPSP1516	SP1516	Strainer Assembly Complete
	HPPSPX1500D2A	SPX1500D2A	Strainer Cover with O-Ring
	HPPSPX1500P	SPX1500P	Strainer Cover O-Ring (can be substituted with O-231)
	AEQO231	O-231	Strainer Cover O-Ring
	HPPSPX1250RA	SPX1250RA	Strainer Basket (1992 and prior)(can also sub with B-169)
	AEQB169	B-169	Strainer Basket (1992 and prior)
	HPPSPX1500LX	SPX1500LX	Strainer Basket- Large, 4½" x 7"
	HPPSPX1500RA	SPX1500RA	Check Valve Assembly (1990 and prior)
	HPPSPX1500W	SPX1500W	Strainer O-Ring (can be sub with O-128)
	AEQO128	O-128	Strainer O-Ring
	HPPSPX1700FG	SPX1700FG	Drain Plug with Gasket
	HPPSPX1500X1	SPX1500X1	Shim for vertical discharge (1999 and prior)
	HPPSPX1515C	SPX1515C	Strainer Housing C-Clip (2000-2003)
	HPPSPX1515CN	SPX1515CN	Strainer Housing C-Clip (2004- Current)
	HPPSPX1580AAT	SPX1580AAT	Pump Housing with External Thread (SP1520UN)
	HPPSPX1520BT	SPX1520BT	Housing Cover with External Thread, 1, 1½, and 2 HP (SP1520UN)
	HPPSPX1580CH	SPX1580CH	1½ HP Hi-Performance Impeller (SP1520UN)
	HPPSPX1525CH	SPX1525CH	2 HP Hi-Performance Impeller (SP1520UN)

All items cataloged are normally stocked unless noted.

Not Stocked While Supplies Last

HAYWARD

Power-Flo II

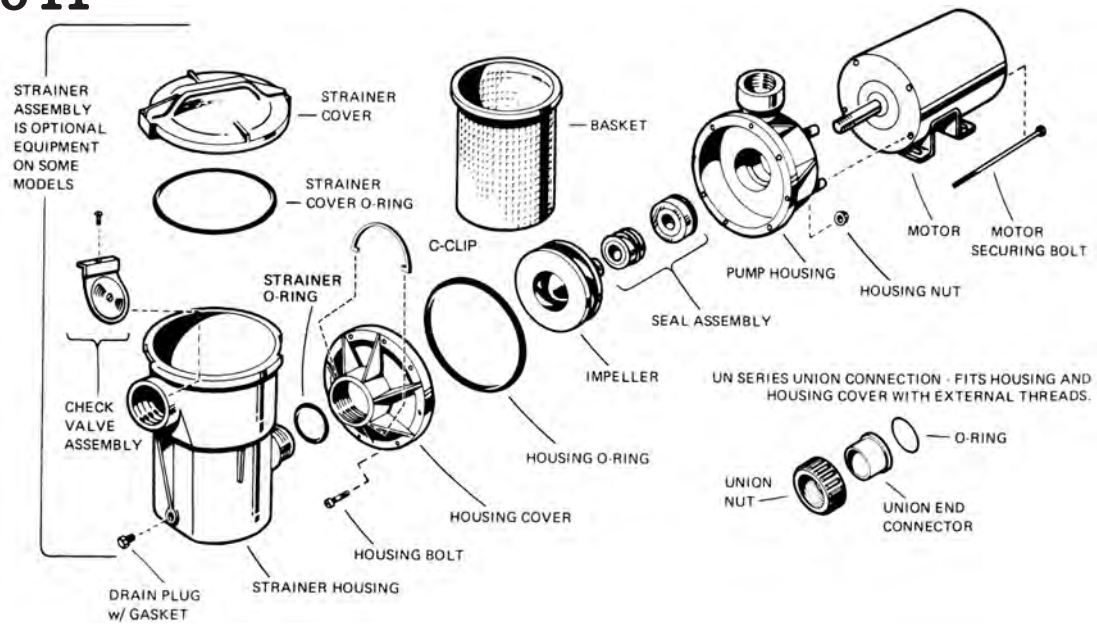

Code	New Product Number	Old Product Number	Description
	HPPSPX1705AA	SPX1705AA	Pump Housing
	HPPSPX1705B	SPX1705B	Housing Cover
	HPPSPX1500KA	SPX1500KA	Seal Assembly (Can be substituted with AS-4702Kit)
	AEQAS4702KIT	AS-4702KIT	Seal Assembly
	AQPAPCAS1000	AS-1000	Seal Assembly (Power-Flo II, 1 and 1.5 HP)
	HPPSPX1705Z1	SPX1705Z1	Housing cover o-ring
	HPPSPX1500N2	SPX1500N2	Housing Bolt, No. 10-24 Hex. Head
	HPPSPX1500Y2	SPX1500Y2	Housing Nut, No. 10-24 Hex.
	HPPSPX1705C	SPX1705C	Impeller ½ HP (SP1700 and Power-Flo II)
	HPPSPX1707C	SPX1707C	Impeller ¾ HP (SP1700 and Power-Flo II)
	HPPSPX1711C	SPX1711C	Impeller 1 HP
	HPPSPX2607C	SPX2607C	Impeller 1 HP (Power-Flo III)
	HPPSPX2610C	SPX2610C	Impeller 1.5 HP (Power-Flo III)
	HPPSP1516	SP1516	Strainer assembly complete
	HPPSPX1500D2A	SPX1500D2A	Strainer Cover, with O-Ring
	HPPSPX1500P	SPX1500P	Strainer Cover O-Ring (can be substituted with O-231)
	AEQO231	O-231	Strainer Cover O-Ring
	HPPSPX1250RA	SPX1250RA	Strainer Basket (1992 and prior) (can be substituted with B-169)
	AEQB169	B-169	Strainer Basket (1992 and prior)
	HPPSPX1500LX	SPX1500LX	Strainer Basket- Large, 4½" x 7"
	HPPSPX1500RA	SPX1500RA	Check Valve Assembly (1990 and prior)
	HPPSPX1500W	SPX1500W	Strainer O-Ring (can be substituted with O-128)
	AEQO128	O-128	Strainer O-Ring
	HPPSPX1700FG	SPX1700FG	Drain Plug with Gasket
	HPPSPX1500X1	SPX1500X1	Shim for vertical discharge (1999 and prior)
	HPPSPX1515C	SPX1515C	Strainer Housing C-Clip (2000-2003)
	HPPSPX1515CN	SPX1515CN	Strainer Housing C-Clip (2004-Current)
	HPPSPX1495Z1	SPX1495Z1	O-Ring, End Connector (can be substituted with O-41)
	AEQO41	O-41	O-Ring, End Connector
	HPPSPX1250WA	SPX1250WA	6' cord with plug terminals
	HPPSPX1550WA1	SPX1550WA1	3' cord with twist lock plug

QUALITY POOL SUPPLY

Code	New Product Number	Old Product Number	Description

HAYWARD®

Matrix

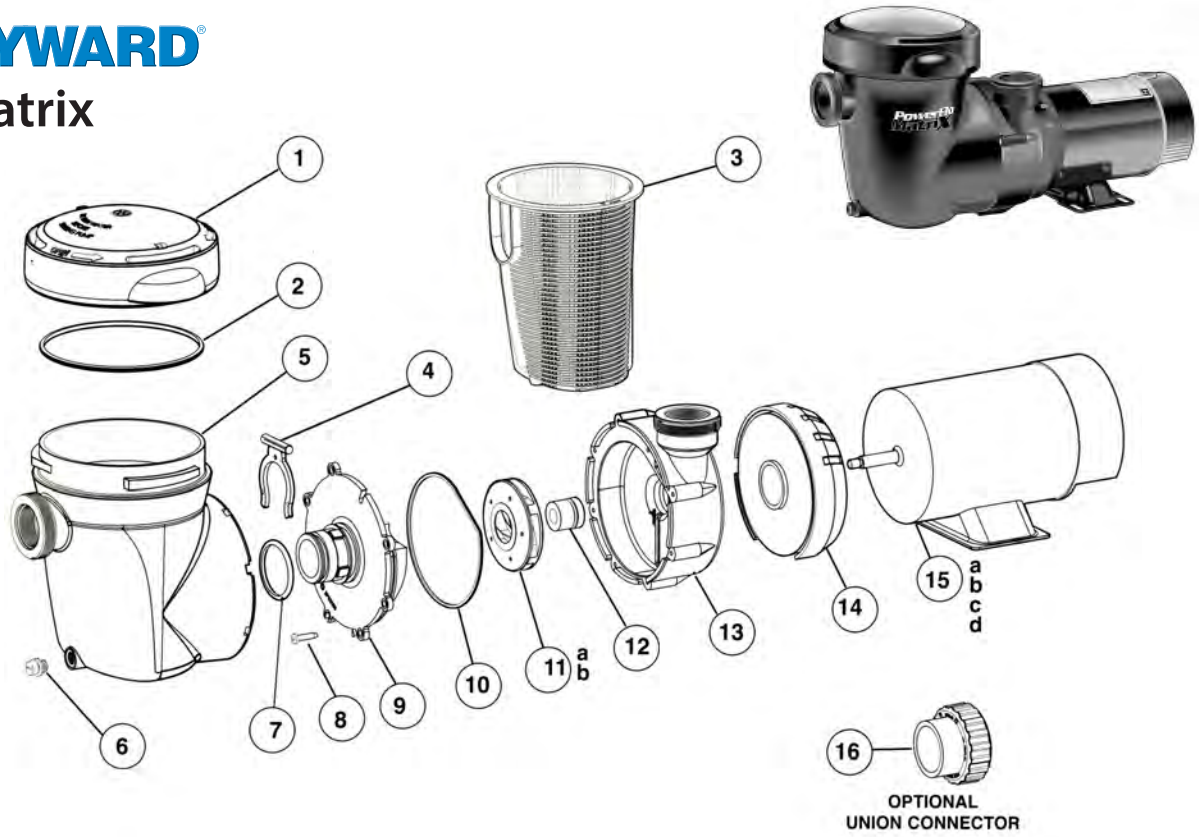

	HPPSPX5500D	SPX5500D	1	Strainer Cover with lock ring and O-ring
	HPPSPX5500H	SPX5500H	2	Strainer Cover O-ring
	HPPSPX5500F	SPX5500F	3	Strainer Basket
	HPPSPX5500G	SPX5500G	4	Strainer Retainer (C-Clip)
	HPPSPX5500C	SPX5500C	5	Strainer Housing
	HPPSPX1700FG	SPX1700FG	6	Drain Plug with Gasket
	HPPSPX5500K	SPX5500K	7	Strainer O-ring
	HPPSPX0714Z48	SPX0714Z48	8	Screw #14 x ¼" Type B Pan Head - Set of 8
	HPPSPX5500B	SPX5500B	9	Pump Cover
	HPPSPX0710XZ5	SPX0710XZ5	10	Housing O-ring
	HPPSPX1500F	SPX1500F	11*	Impeller Assembly
	HPPSPX1500L	SPX1500L	11*	Impeller Assembly
	AQPAPCAS200	AS-200	12	Shaft Seal Assembly
	HPPSPX5500A	SPX5500A	13	Pump Housing
	HPPSPX5500E	SPX5500E	14	Shroud Assembly
	CRMBN24V1	BN24SS	15	¾ HP Motor
	CRMBN25V1	BN25SS	15	1 HP Motor
	CRMBN35V1	BN35SS	15	1.5 HP Motor
	HPPSP1500UNPAK2	SP1500UNPAK2	16	Union Package - 2 unions

* Reference the part number from original equipment.

All items cataloged are normally stocked unless noted.

Not Stocked While Supplies Last

NOTES

QUALITY POOL SUPPLY

STA-RITE

Dura-Glas Series
"Uprated Models"

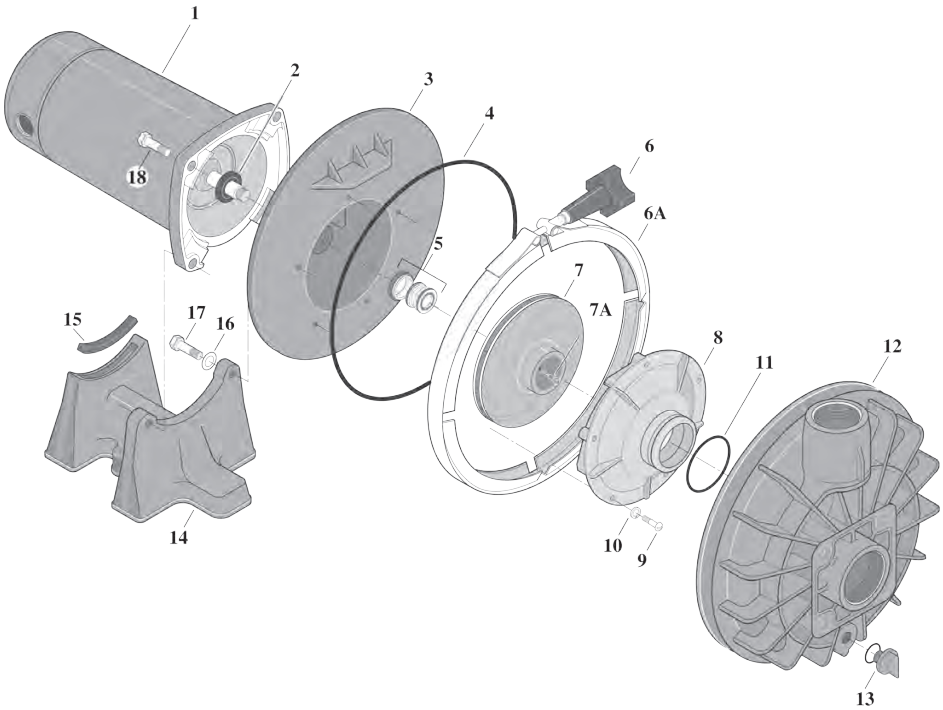

Code	New Product Number	Old Product Number	Description	
	PEN173510009	17351-0009	2	Water Slinger for P2RA5YEL and P2RA5YFL
	PENC203193P	C203-193P	3	Seal Plate Kit (Includes seal plate, shaft seal and seal plate O-ring)
	PENU9228A50	U9-228A	4	O-ring for seal plate (Pentair) OEM
	AEQO240	O-240	4	O-ring for seal plate (Aladdin)
	PEN173040100S	17304-0100S	5	Shaft Seal - New Style
	PENWC3622	WC36-22	6	Clamp Knob
	PENC1937A	C19-37A	6A	Clamp
	PENC10592PR	C105-92PR	7	Impeller, ½ HP (P2ra5cl)
	PENC10592PS	C105-92PS	7	Impeller, ¾ HP (P2ra5dl)
	PENC105138PEB	C105-138PEB	7	Impeller, 1 HP (P2ra5el)
	PENC105138PEB	C105-138PEB	7	Impeller, 1 HP (P2ra5yel)
	PENC105137PEB	C105-137PEB	7	Impeller, 1.5 HP (P2ra5fl, P2ra6fl)
	PENC105137PEBA	C105-137PEBA	7	Impeller, 1.5 HP (P2ra5yl)
	PENC105137PEBA	C105-137PEBA	7	Impeller, 1.5 HP (P2ra5yfl)
	PENC105137PDBA	C105-137PDBA	7	Impeller, 2 HP (P2ra5gl, P2ra6gl)
	PENC105137PDBA	C105-137PDBA	7	Impeller, 2 HP (P2ra5ygl) (P2RA6YGL)
	PENC3012	C30-12	7A	Impeller Screw ½ - 2½ HP
	PENC1217P	C1-217P	8	Diffuser, 1/2 HP (up-rate)
	PENC1216P	C1-216P	8	Diffuser, 3/4 HP (up-rate)
	PENC1200PA	C1-200PA	8	Diffuser, 1HP - 2.5 HP (up-rate)
	PENU30542SS	U30-542SS	9	Capscrew 8 - 32 x ⅞" (5 required)
	PENU4321SS	U43-21SS	10	Lock Washer (5 required)
	PENU9226	U9-226	11	Diffuser O-ring (Pentair)
	AEQO49	O-49	11	Diffuser O-ring (Aladdin)
	PENC17647P1	C176-47P1	12	Tank Body
	PENU178920P	U178-920P	13	Drain Plug ¼" NPT with O-ring
	PENU9359	U9-359	13A	Drain Plug O-ring
	PENC10442P	C104-42P	14	Base with Motor Pad
	PENC3511	C35-11	15	Motor Rubber Pad Only
	PENU4342SS	U43-42SS	16	Washer, Flat (2 required)
	PENU3074SS	U30-74SS	17	Capscrew, ⅜ - 16 x 1" (2 required)
	PENU3077SS	U30-77SS	18	Capscrew, ⅜ - 16 x 13/4" (2 required)

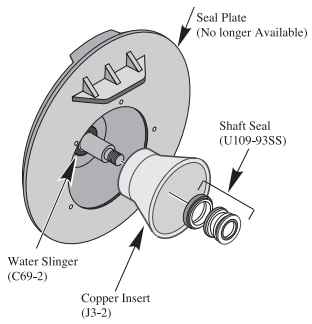

3A - Old Style (Pre-1998)

All items cataloged are normally stocked unless noted.

Not Stocked While Supplies Last

STA-RITE®

Dura-Glas II

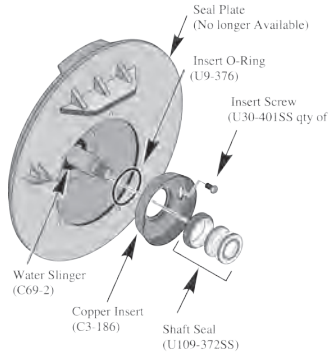

5A - Old Style (Pre-1998)

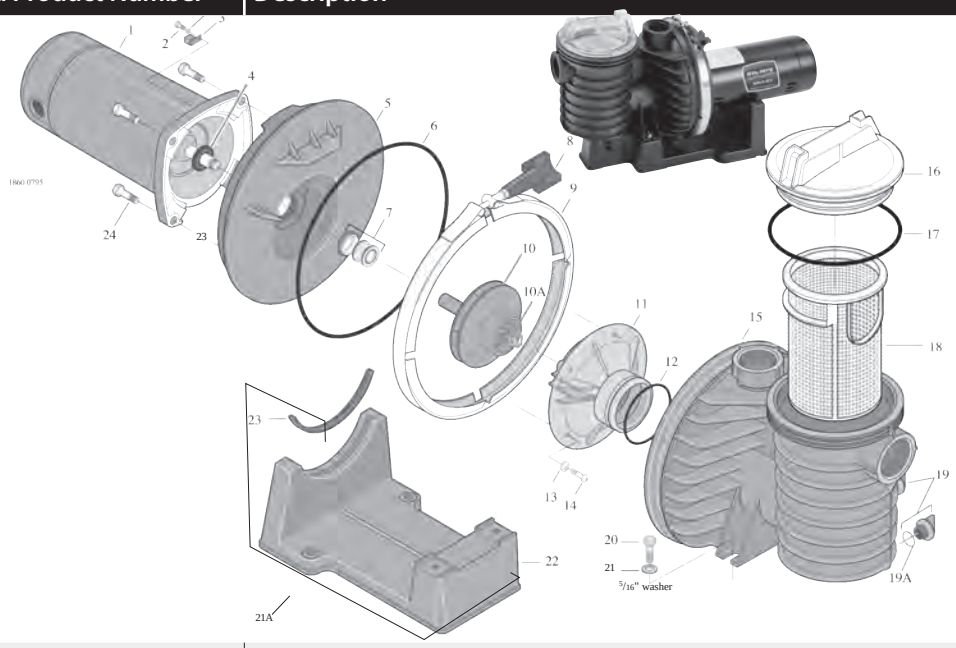

Code	New Product Number	Old Product Number	Description	
	PENU30692SS	U30-692SS	2	Screw, 10-32 x ½"
	PENU4322SS	U43-22SS	2A	Lockwasher
	PENU17568	U17-568	3	Bonding Lug
	PEN173510009	17351-0009	4	Water Slinger - Replaces C69-2 (effective 9/00)
	PENC203194P	C203-194P	5/5A	Seal Plate Kit - Includes Seal Plate, Shaft Seal and Seal Plate O-Ring New Seal Plate design. See inset drawing on opposite page for models with Copper Insert, see Figure 5A.
	PENU9228A50	U9-228A	6	O-Ring
	PENWC3622	WC36-22	8	Clamp Knob
	PENC1937A	C19-37A	9	Clamp
	PENC105238P	C105-238P	10	Impeller - 1 HP uprated
	PENC105238PB	C105-238PB	10	Impeller - 1½ HP uprated; 1 HP full rated
	PENC105238PDBA	C105-238PDBA	10	Impeller - 2 HP uprated; 1½ HP full rated
	PENC105238PEBA	C105-238PEBA	10	Impeller - 2½ HP uprated; 2 HP full rated
	PENC105238PLA	C105-238PLA	10	Impeller - 3 HP full rated
	PEN373376081	37337-6081	10A	Impeller Screw (Model C105-238PBA)
	PEN373376080	37337-6080	10A	Impeller Screw (All models except C105-238PBA)
	PENC1271P1	C1-271P1	11	Diffuser - 1 HP and 1½ HP uprated; ¾ HP and 1 HP full rated
	PENC1271P	C1-271P	11	Diffuser - 1¾ thru 2½ HP uprated; 1½ HP thru 3 HP full rated
	PENU9374	U9-374	12	Diffuser O-Ring
	PENU4321SS	U43-21SS	13	Lockwasher, #8
	PENU30542SS	U30-542SS	14	Diffuser Screw, ¾ HP & 1 HP
	PENU30922SS	U30-922SS	14	Diffuser Screw, 1-½, thru 3 HP
	PENC17659P	C176-59P	15	Tank Body Assembly (includes Trap Cover, O-Ring, Basket)
	PENC3185P	C3-185P	16	Trap Cover
	PENC3185P3	C3-185P3	16	Trap Cover - (Biguanide Resistant)
	PENU9375	U9-375	17	Trap Cover O-Ring (Can Sub 0-12)
	AEQO12	O-12	17	Trap Cover O-Ring
	PENC858PZ	C8-58P	18	Basket
	PENU178920P	U178-920P	19	Drain Plug ¼" NPT with O-Ring
	PENU9359	U9-359	19A	Drain Plug O-Ring
	PENU30918SS	U30-918SS	20	Screw, Base
	PENC478P	C4-78P	21	Base without Motor Pad
	PENC10479P	C104-79P	21	Base with Motor Pad (3 HP only)
	PENC3543	C35-43	22	Motor Pad
	PENU3074SS	U30-74SS	23	Capscrew, ⅜-16 x 1"
	PENU3099SS	U30-99SS	23	Capscrew, Socket Head, ⅜-16 x 1" (3 HP only)
	PEN355051426	35505-1426	-	Impeller O-Ring

QUALITY POOL SUPPLY

Code	New Product Number	Old Product Number	Description

STA-RITE

Max-E-Glas

"Full Rated Models"

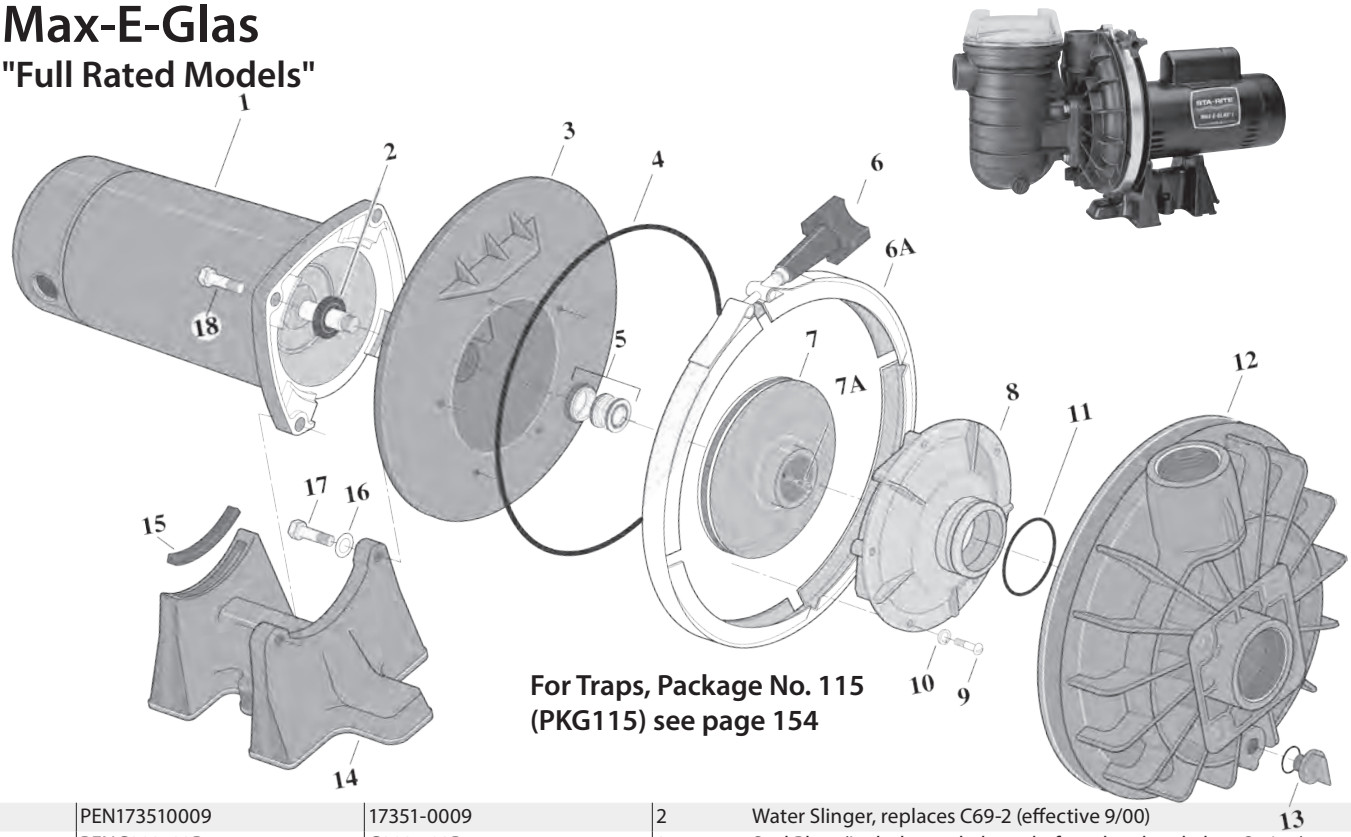

For Traps, Package No. 115 (PKG115) see page 154

	PEN173510009	17351-0009	2	Water Slinger, replaces C69-2 (effective 9/00)
	PENC203193P	C203-193P	3	Seal Plate (Includes seal plate, shaft seal and seal plate O-ring)
	PENU9228A50	U9-228A	4	O-ring for Seal Plate (Pentair OEM)
	AEQO240	O-240	4	O-ring for Seal Plate (Aladdin)
	PEN173040100S	17304-0100S	5	Shaft Seal-New Style
	PENWC3622	WC36-22	6	Clamp Knob
	PENC1937A	C19-37A	6A	Clamp
	PENC10592PS	C105-92PS	7	Impeller, ½HP (Pe5cl)
	PENC105138PEB	C105-138PEB	7	Impeller, ¾HP (Pe5dl)
	PENC105137PEB	C105-137PEB	7	Impeller, 1HP (Pe5el)
	PENC105137PDBA	C105-137PDBA	7	Impeller, 1.5HP (Pe5fl)
	PENC105137PDA	C105-137PDA	7	Impeller, 2HP (Pe5gl)
	PENC105137PKBA	C105-137PKBA	7	Impeller, 3HP (Pe6hl)
	PENC1216P	C1-216P	8	Diffuser ½HP (Full Rate)
	PENC1200PA	C1-200PA	8	Diffuser ¾-2.5ph (Full Rate)
	PENC1259P	C1-259P	8	Diffuser 3HP (FullRate)
	PENU30542SS	U30-542SS	9	Screw 8 - 32x⅞" (5 required)
	PENU30997SS	U30-997SS	9	Screw 8 - 32x1" for Pegh3 (5 required)
	PENU4321SS	U43-21SS	10	Washer #8 Lock (5 required)
	PENU9226	U9-226	11	Diffuser O-ring (Pentair OEM)
	AEQO49	O-49	11	Diffuser O-ring (Alladin)
	PENC17647P1	C176-47P1	12	Tank Body
	PENU178920P	U178-920P	13	Drain Plug ¼ NPT with O-ring
	PENU9359	U9-359	13A	Drain Plug O-ring
	PENC10442P	C104-42P	14	Base with Motor Pad
	PENC10441P	C104-41P	14	Base with Motor Pad (3 HP Only)
	PENC3511	C35-11	15	Motor Pad Only
	PENU4342SS	U43-42SS	16	Washer (2 required)
	PENU3074SS	U30-74SS	17	Capscrew ⅜x16x1 Hex Head (2 required)
	PENU3099SS	U30-99SS	17	Capscrew ⅜x16x1 (2 required) (3 HP ONLY)
	PENU3077SS	U30-77SS	18	Capscrew ⅜x16x1¾" HexHead (2 required)
	PENU30778SS	U30-778SS	18	Capscrew ⅜x16x1¾" (2 required)

All items cataloged are normally stocked unless noted.

Not Stocked While Supplies Last

STA-RITE

Max-E-Glas II Series

"Full Rated Models"

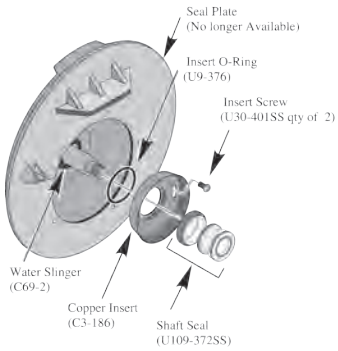

5A - Old Style (Pre-1998)

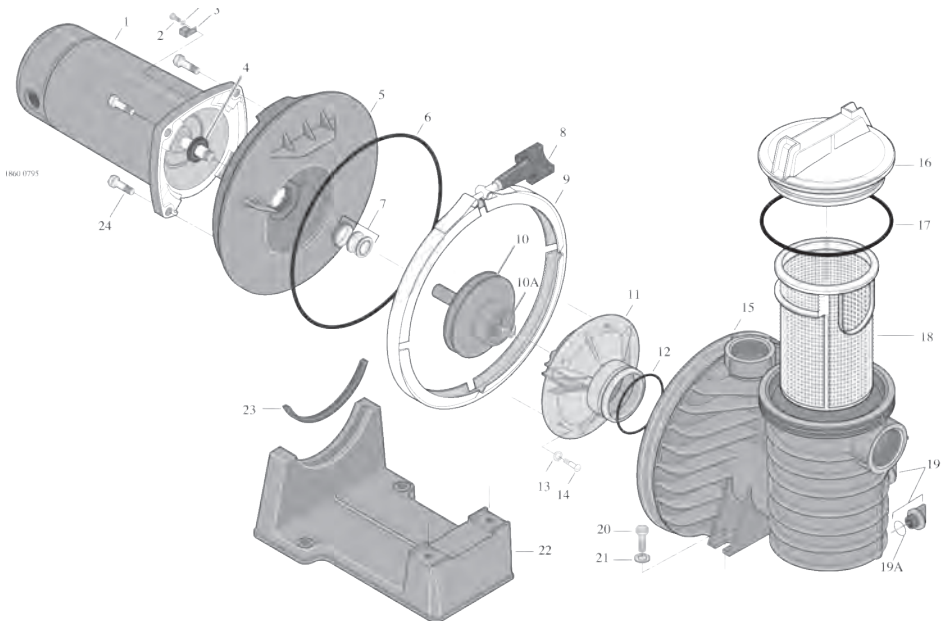

Code	New Product Number	Old Product Number	Description	
	PENU30692SS	U30-692SS	2	Screw, 10-32 x ½"
	PENU4322SS	U43-22SS	2A	Lockwasher
	PENU17568	U17-568	3	Bonding Lug
	PEN173510009	17351-0009	4	Water Slinger - Replaces C69-2 (effective 9/00)
	PENC203194P	C203-194P	5/5A	Seal Plate Kit - Includes Seal Plate, Shaft Seal and Seal Plate O-Ring New Seal Plate design. See inset drawing on opposite page for models with Copper Insert, see Figure 5A.
	PENU9228A50	U9-228A	6	O-Ring
	PENWC3622	WC36-22	8	Clamp Knob
	PENC1937A	C19-37A	9	Clamp
	PENC105238P	C105-238P	10	Impeller for P4E6D-186L, P4E62D-186L
	PENC105238PB	C105-238PB	10	Impeller for P4E6E-187L, P4E62E-187L
	PENC105238PDBA	C105-238PDBA	10	Impeller for P4E6F-188L, P4E62F-188L
	PENC105238PEBA	C105-238PEBA	10	Impeller for P4E6G-189L, P4E62G-189L
	PENC105238PLA	C105-238PLA	10	Impeller for P4E6H-190L, P4E62H-190L
	PEN373376081	37337-6081	10A	Impeller Screw (Model C105-238PBA)
	PEN373376080	37337-6080	10A	Impeller Screw (All models except C105-238PBA)
	PENC1271P1	C1-271P1	11	Diffuser – 1 HP & 11/2 HP
	PENC1271P	C1-271P	11	Diffuser – 1-3/4 thru 2-1/2 HP
	PENU9374	U9-374	12	Diffuser O-Ring
	PENU4321SS	U43-21SS	13	Lockwasher, #8
	PENU30542SS	U30-542SS	14	Diffuser Screw, ¾ HP & 1 HP
	PENU30922SS	U30-922SS	14	Diffuser Screw, 1-1/2, thru 3 HP
	PENC17659P	C176-59P	15	Tank Body Assembly (includes Trap Cover, O-Ring, Basket)
	PENC3185P	C3-185P	16	Trap Cover
	PENC3185P3	C3-185P3	16	Trap Cover - (Biguanide Resistant)
	PENU9375	U9-375	17	Trap Cover O-Ring (Can Sub 0-12)
	AEQO12	O-12	17	Trap Cover O-Ring
	PENC858PZ	C8-58P	18	Basket
	PENU178920P	U178-920P	19	Drain Plug 1/4" NPT with O-Ring
	PENU9359	U9-359	19A	Drain Plug O-Ring
	PENU30918SS	U30-918SS	20	Screw, Base
	PENC478P	C4-78P	21	Base without Motor Pad
	PENC10479P	C104-79P	21	Base with Motor Pad (3 HP only)
	PENC3543	C35-43	22	Motor Pad
	PENU3074SS	U30-74SS	23	Capscrew, ⅜-16 x 1"
	PENU3099SS	U30-99SS	23	Capscrew, Socket Head, ⅜-16 x 1" (3 HP only)
	PEN355051426	35505-1426	-	Impeller O-Ring

QUALITY POOL SUPPLY

PENTAIR

Max-E-Pro Series

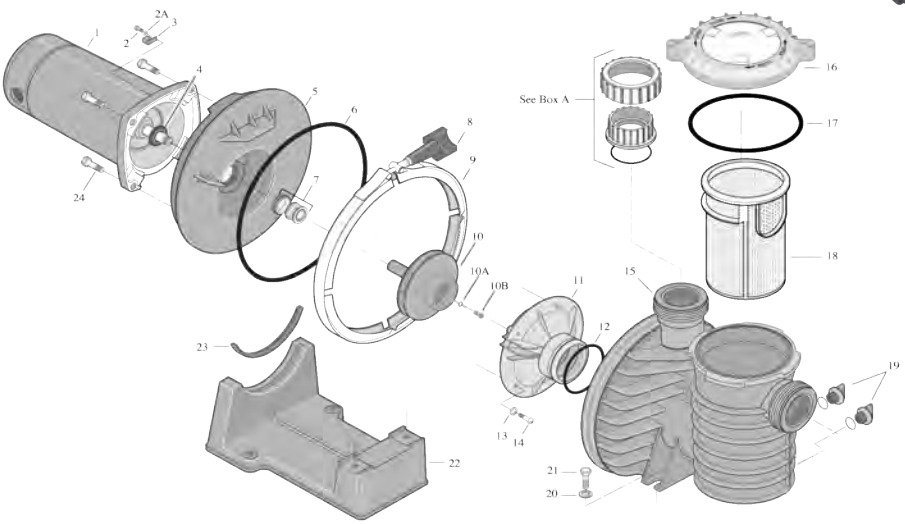

Code	New Product Number	Old Product Number	Description	
	PENU30692SS	U30-692SS	2	#10-32 x ½" Screw
	PENU4322SS	U43-22SS	2A	Lock Washer
	PENU17568	U17-568	3	Bonding Lug
	PEN173510009	17351-0009	4	Water Slinger - Replaces C69-2 (effective 9/00)
	PENC203194P	C203-194P	5/5A	**Seal Plate Kit** (Includes Part Nos. 6, 7).
	PENU9228A50	U9-228A	6	O-Ring
	PEN173510101S	17351-0101S	7	Shaft Seal
	PENWC3622	WC36-22	8	Clamp Knob
	PENC1937A	C19-37A	9	Clamp
	PENC105238P	C105-238P	10	Impeller for P6E6D-205L, P6EA6E-205L, and P6RA6E
	PENC105238PB	C105-238PB	10	Impeller for P6E6E-206L, P6EA6F-206L, and P6RA6F-206L
	PENC105238PEBA	C105-238PEBA	10	Impeller for P6E6G-208L, P6EAA6G-208L
	PENC105238PDBA	C105-238PDBA	10	Impeller for P6E6F-207L, P6EA6G-207L, P6RA6G-207L, P6RA6YG-207L
	PENC105238PDCA	C105-238PDCA	10	Impeller for P6EAA6F-216L, P6RAA6F-216L
	PENC105238PLA	C105-238PLA	10	Impeller for P6E6H-209L
	PENC105238PBA	C105-238PBA	10	Impeller for P6RA6YF-206L
	PEN355051426	35505-1426	10A	Impeller Screw O-Ring
	PEN373376080	37337-6080	10B	Impeller Screws Fits all EXCEPT P6RA6YF-206L
	PEN373376081	37337-6081	10B	Impeller Screw for P6RA6YF-206L ONLY
	PENC1271P1	C1-271P1	11	Diffuser for 115/230 Volt
	PENC1271P	C1-271P	11	Diffuser for 230 Volt and 2-Speed
	PENU9374	U9-374	12	Diffuser O-Ring
	PENU4321SS	U43-21SS	13	#8 Lock Washer
	PENU30542SS	U30-542SS	14	Screw (with C1-271P1 Diffuser)
	PEN173070110S	17307-0110S	15	Tank Body Assembly (Includes Trap Body, Basket, Drain Plugs, and Trap Cover Assembly)
	PEN173070111S	17307-0111S	16	Trap Cover Assembly (Includes Trap Cover, Trap Ring and Trap Cover O-Ring)
	PEN355051440	35505-1440	17	Trap O-Ring
	PENC858PZ	C8-58P	18	Basket
	PENU178920P	U178-920P	19	¼" NPT Drain Plug
	PENU9359	U9-359	19	Drain Plug O-Ring
	PENU4341SS	U43-41SS	20	Base Washer
	PENU30918SS	U30-918SS	21	Base Screw
	PENC478P	C4-78P	22	Base with Motor Pad
	PENC10479P	C104-79P	22	Base with Motor Pad (3 HP only)
	PENC3543	C35-43	23	Motor Pad
	PENC3544	C35-44	23	Motor Pad (3 HP only)
	PENU3074SS	U30-74SS	24	⅜-16x1" Hex Hd. Screw
	PENU3099SS	U30-99SS	24	⅜-16x1" Hex Hd. Screw (3 HP only)

All items cataloged are normally stocked unless noted.

Not Stocked While Supplies Last

PENTAIR

Dyna-Pro

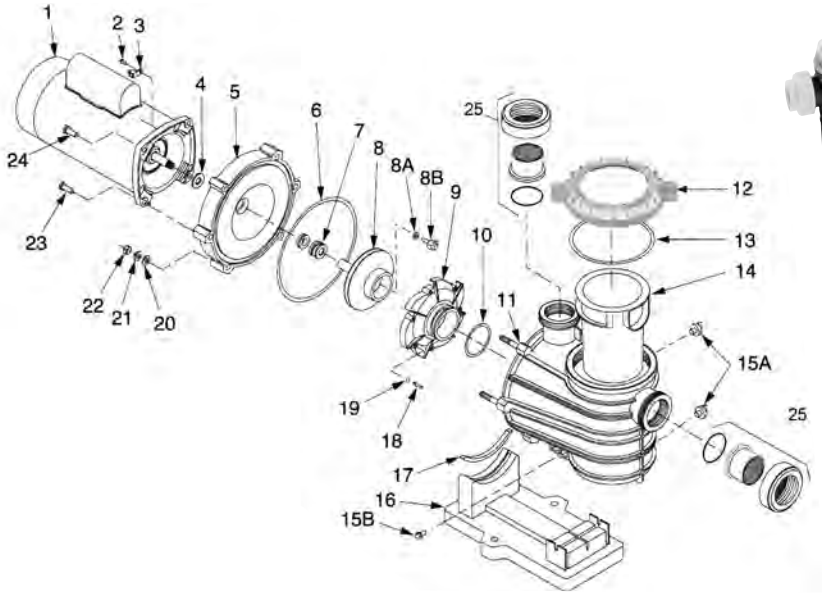

Code	New Product Number	Old Product Number		Description
	PEN173510009	17351-0009	4	Slinger
	PENC3184P	C3-184P	5	Seal Plate
	PENU9373	U9-373	6	Seal Plate Cord Ring
	PENC105236P	C105-236P	8	Impeller, ½ HP - Models MPEA6D-204L, MPE6C-204L, MPRA6D-204L
	PENC105236PB	C105-236PB	8	Impeller, 1 HP - Models MPEA6E-205L, MPE6D-205L, MPRA6E-205L, MPRA6E-147L, MPRA6E-147LC
	PENC105236PC	C105-236PC	8	Impeller, 1½ HP - Models MPEA6F-206L, MPE6E-206L, MPRA6F-206L, MPRA6YF-206L
	PENC105236PDA	C105-236PDA	8	Impeller, 2 HP - Models MPEA6G-207L, MPE6F-207L, MPEA6YG-207L, MPE6YF-207L, MPRA6G-207
	PENC105236PEA	C105-236PEA	8	Impeller, 2½ HP - Models MPEAA6G-208L, MPA6G-208L, MPEAA6YG-208L, MPE6G-208L
	PEN334551047	33455-1047	8A	Gasket, Models MPEA6G-207L, MPE6F-207L, MPEA6YG-207L, MPE6YF-207L, MPRA6G-207, MPEAA6G-208L, MPA6G-208L, MPEAA6YG-208L, MPE6G-208L
	PEN373376080	37337-6080	8B	Impeller Lock Screw, Models MPEA6G-207L, MPE6F-207L, MPEA6YG-207L, MPE6YF-207L, MPRA6G-207, MPEAA6G-208L, MPA6G-208L, MPEAA6YG-208L, MPE6G-208L
	PENC1270PB	C1-270PB	9	Diffuser - ½ HP
	PENC1270PC	C1-270PC	9	Diffuser - 1 HP
	PENC1270P	C1-270P	9	Diffuser 1½ - 2½ HP
	PENU9374	U9-374	10	Diffuser O-Ring
	PENC17671P	C176-71P	11	Tank and Trap Body (Only)
	PENC3185P	C3-185P	12	Trap Cover
	PEN173070111S	17307-0111S	12	Trap Lid and Ring Assembly
	PEN355051440	35505-1440	13	Trap Cover O-Ring
	PENC858PZ	C8-58P	14	Trap Basket
	PENU178920P	U178-920P	15A	Drain Plug
	PENU30919SS	U30-919SS	15B	Mounting Screw 5/16-14 x 5/8"
	PENC477P	C4-77P	16	Base - Plastic
	PENC3545	C35-45	17	Motor Pad - for Plastic Base
	PENU30542SS	U30-542SS	18	Screw #8-32 x 7/8" Rd. Hd.
	PENU4321SS	U43-21SS	19	Lock Washer #8 Ext. Tooth.
	PENU4362SS	U43-62SS	20	Flat Washer 3/8"
	PENU4312SS	U43-12SS	21	Lock Washer 3/8"
	PENU3638SS	U36-38SS	22	Nut 3/8-16 Hex
	PENU3075SS	U30-75SS	23	Cap Screws 3/8-16x1¼" Hex. (LSSuffix)
	PENU3074SS	U30-74SS	24	Cap Screws 3/8-16x1" Hex.
	PENPKG188	PKG188	25	Half Union PKG 2" Slip

All items cataloged are normally stocked unless noted.

Not Stocked While Supplies Last

QUALITY POOL SUPPLY

Code	New Product Number	Old Product Number	Description

STA-RITE

Dura-Jet JS Series

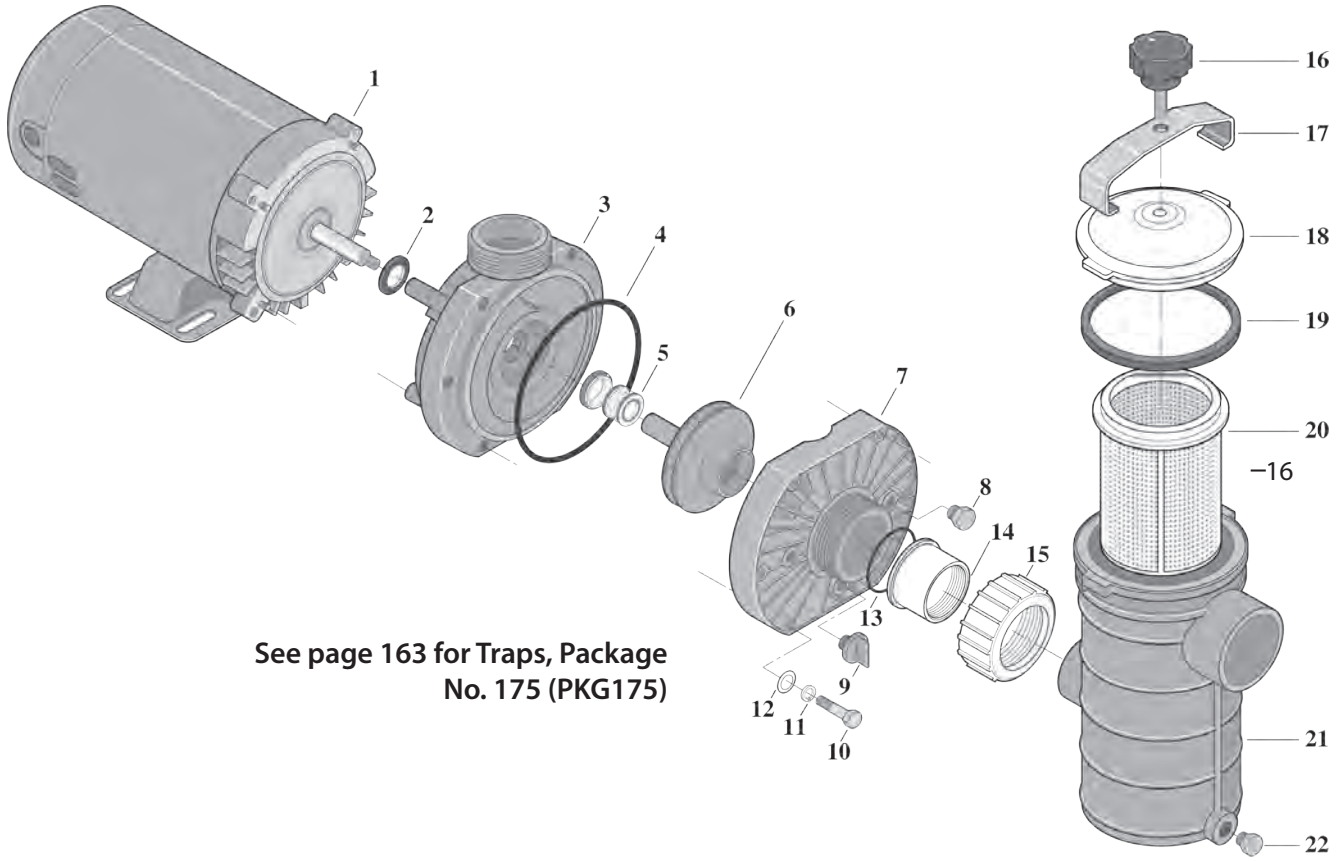

See page 163 for Traps, Package No. 175 (PKG175)

	PEN355051438	35505-1438	4	O-Ring - Replaces U9-357 (effective 11/01)
	PENC105228PE	C105-228PE	6	Impeller - ONLY for Model JSADL-2A
	PENC105228PF	C105-228PF	6	Impeller - ONLY for Model JSAEL-2A
	PENWC7840T	WC78-40T	8	Pipe Plug, ¼" NPT
	PENU178920P	U178-920P	9	Drain Plug With O-Ring
	PEN307870005	30787-0005	10	Capscrew, ¼ - 20 x 1¾"
	PENU4322SS	U43-22SS	11	Lockwasher
	PENU9226	U9-226	13	O-Ring
	PENU11183PM	U11-183PM	14	Adapter, Union
	PENU11182PM	U11-182PM	15	Collar, Union
			16	4" Plastic Trap
	PENU9359	U9-359	-	Drain Plug O-Ring

All items cataloged are normally stocked unless noted.

Not Stocked While Supplies Last

Code	New Product Number	Old Product Number	Description	

STA-RITE

JWPA Series

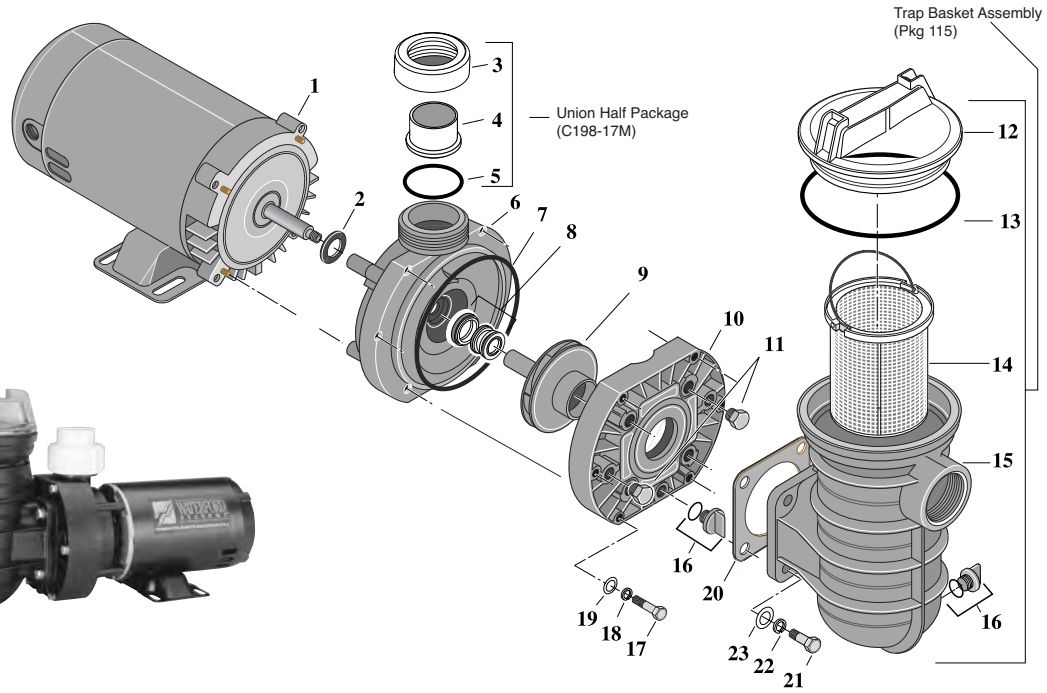

	AEQC692	C69-2	2	Water Slinger
	PENU11182PM	U11-182PM	3	Collar ***
	PENU11201PM	U11-201PM	4	Adapter ***
	PENU9226	U9-226	5	O-Ring ***
	PEN173010150	17301-0150	6	Seal Plate
	PEN355051438	35505-1438	7	O-Ring
	PENC105228PG	C105-228PG	9	Impeller - For 1HP and 1½ HP
	PENC105228PJ	C105-228PJ	9	Impeller - For ½ HP
	PENC105228PH	C105-228PH	9	Impeller - For ¾ HP
	PENC101272PS	C101-272PS	10	Front Plate Assembly
	PENWC7840T	WC78-40T	11	Drain Plug, ¼", taped
	PENC3139P1	C3-139P1	12	Trap Cover
	PENU9229	U9-229	13	O-Ring, Trap Cover
	PENC10833P	C108-33P	14	5" Strainer Basket
	PENC15353P1	C153-53P1	15	Trap Body
	PENU178920P	U178-920P	16	Pipe Plug, ¼" NPT (with O-Ring)
	PEN307870005	30787-0005	17	Bolt, Hex Head, ¼-20 x 1¾"
	PENC20123	C20-123	20	Gasket, Suction
	PENU3064SS	U30-64SS	21	Capscrew, 5⁄16-18 x 1¼"
	PENU4311SS	U43-11SS	22	Lockwasher, 5⁄16"
	PENU4341SS	U43-41SS	23	Washer, 5⁄16" Flat
	PENU1171117	U117-1117	-	Cord Assembly, Straight Plug (-A2,-230A2, -2A2)
	PEN319530101	31953-0101	-	Cord Assembly, Twist-Lok Plug (-A1, -2A1)
	PEN319530116	31953-0116	-	Cord Assembly, 6' Non-UL (-2A4)

All items cataloged are normally stocked unless noted.
Not Stocked While Supplies Last

QUALITY POOL SUPPLY

STA-RITE

D Series 3 & 5 HP

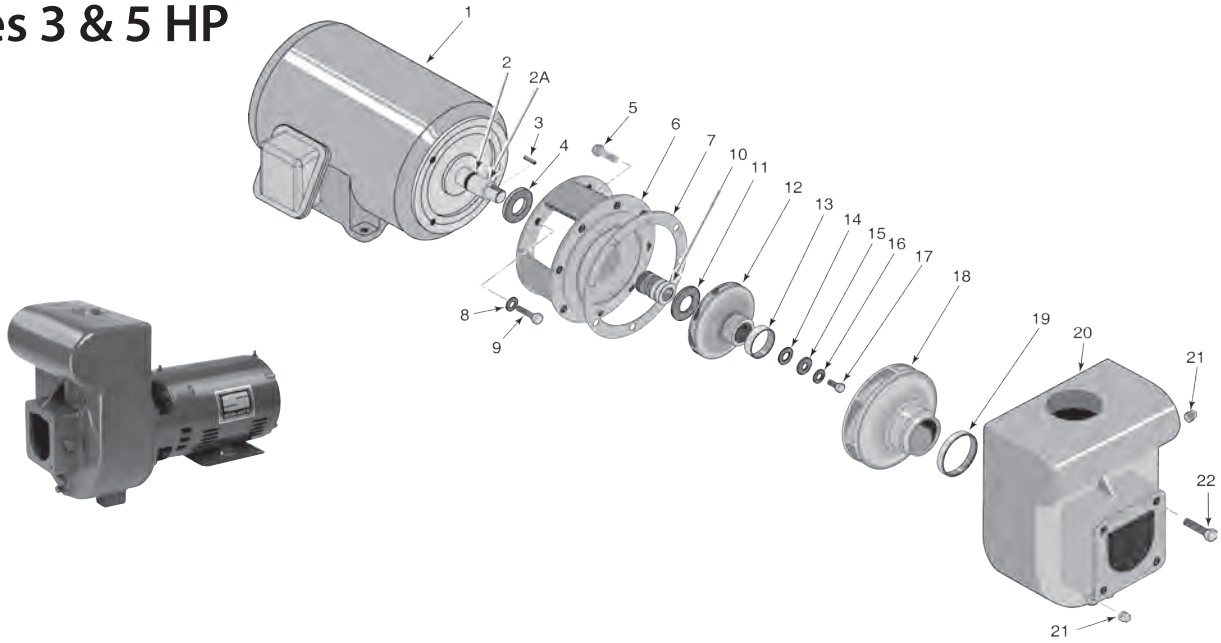

Code	New Product Number	Old Product Number	Index	3HP	5HP	3HP	5HP	Description
				Med. Head		High Head		
	PENU9265	U9-265	2	x	x	x	x	O-Ring
	PENC2358	C23-58	2A	x	x	x	x	Sleeve
	PENU6542A	U65-42A	3	x	x	x	x	Key, Square 3/16 x 3/16 x 7/8"
	PENC2046	C20-46	7	x	x	x	x	Gasket, Adapter (Can Sub G-67)
	AEQG67	G-67	7	x	x	x	x	Gasket, Adapter
	PENU4312ZP	U43-12ZP	8	x	x	x	x	Lockwasher, 3/8"
	PEN071681	071681	9	x	x	x	x	Capscrew, 3/8 - 16 x 7/8" #07168
	PENU109433SS	U109-433SS	10	x	x	x	x	Shaft Seal - Replaces U109-220 (effective 8/00)
	PENC20101	C20-101	11	x	x	x	x	Gasket, Seal
	PENC5246	C5-246	12	x				Impeller
	PENC5247	C5-247	12		x			Impeller
	PENC5248	C5-248	12			x		Impeller
	PENC5249	C5-249	12				x	Impeller
	PENJ235	J23-5	13	x	x	x	x	Wear Ring (Only)
	PENC2314	C23-14	13		x			Wear Ring (Only)
	PENC20100	C20-100	14	x	x	x	x	Gasket
	PENC4345SS	C43-45SS	15	x	x	x	x	Washer, Impeller
	PENC4346	C43-46	16	x	x	x	x	Gasket
	PENU3072SS	U30-72SS	17	x	x	x	x	Screw, Impeller 3/8 - 16 x 3/4"
	PENC101126	C101-126	18	x				Volute Diffuser with Wear Ring
	PENC101126B	C101-126B	18		x			Volute Diffuser with Wear Ring
	PENC101132	C101-132	18			x	x	Volute Diffuser with Wear Ring
	PENC212	C21-2	19	x	x	x	x	Diffuser Ring (Can Sub 0-208)
	AEQO208	O-208	19	x	x	x	x	Diffuser Ring
	PENC7612	C76-12	20	x			x	Pump Body
	PENC7612C	C76-12C	20		x			Pump Body
	PENC7612B	C76-12B	20			x		Pump Body
	PENU78941ZPV	U78-941ZPV	21	x	x	x	x	Pipe Plug, 1/4" NPT
	PENU3060ZP	U30-60ZP	22	x	x	x	x	Capscrew 5/16 - 18 x 3/4"
	PENU21268T	U212-68T	-	x	x	x	x	Draincock, 1/4" NPT*

All items cataloged are normally stocked unless noted.

Not Stocked While Supplies Last

PENTAIR

CSP Series

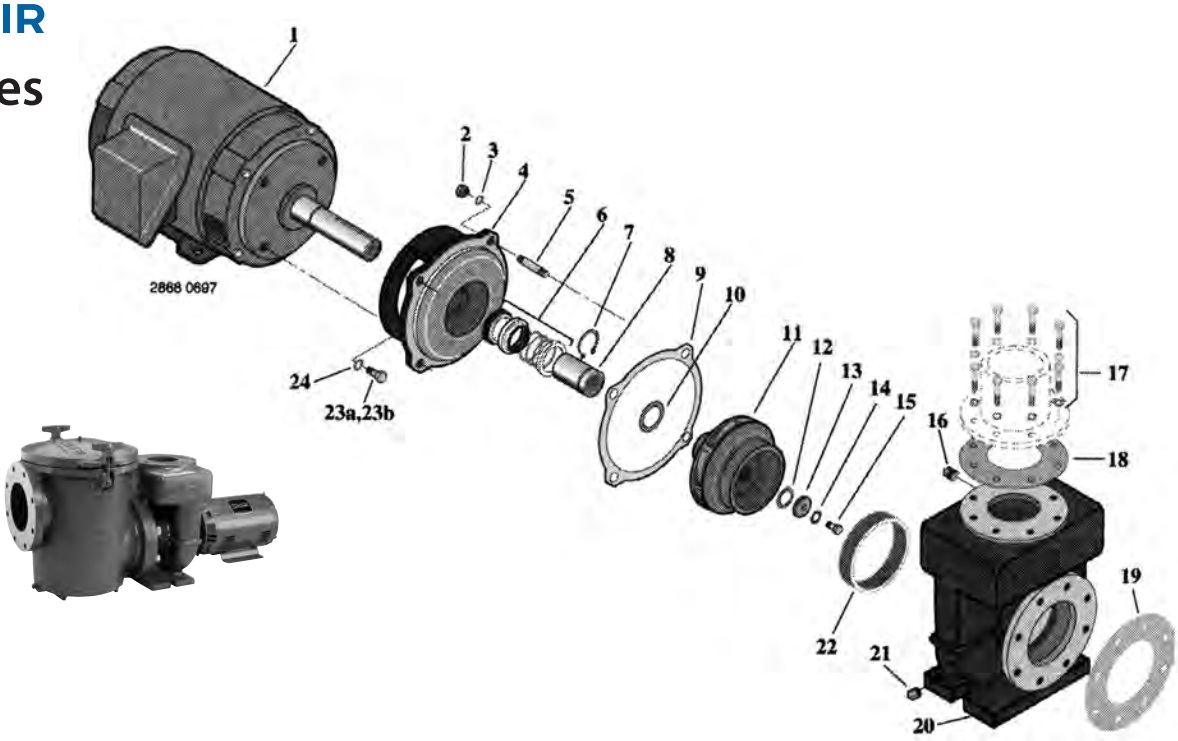

Code	New Product Number	Old Product Number		Description
	PENS23488	S23488	2	Nut, ½"
	PEN350063	350063	3	Lockwasher, ½"
	PENU4312SS	U43-12SS	3	Lockwasher, ⅜" - 3 Phase only
	PENL05329	L05329	4	Bracket - 7½ HP (CSPH, CSPH2 Models)
	PENL05328	L05328	4	Bracket - 10 HP (CSPH, CSPH2 Models) 15 HP (CSPH, CSPH2 Models)
	PEN307470152	30747-0152	5	Stud, ½-13 x 1½"
	PENS32014	S32014	6	Mechanical Shaft Seal - through 15 HP
	PENS11207	S11207	7	Retaining Ring
	PENS16767	S16767	7	Retaining Ring - 20 HP (Models: CSPHN3-1451, CCSPHN3-1451)
	PEN374470001L	37447-0001L	8	Shaft Sleeve
	BKPS04757	S04757	9	Gasket (Volute to Bracket)
	PEN334558044	33455-8044	10	Gasket (Impeller to Shaft Sleeve)
	PEN334558046	33455-8046	10	Gasket (Impeller to Shaft Sleeve) - 20 HP
	PEN168300209	16830-0209	11	Impeller - 7½ HP
CALL	PEN168300210	16830-0210	11	Impeller- 10 HP
CALL	PEN168300211	16830-0211	11	Impeller - 15 HP
	PEN168300212	16830-0212	11	Impeller - 20 HP
	PEN334558043	33455-8043	12	Gasket (Impeller to Washer) - through 15 HP
	PENC4346SS	C43-46SS	14	Stat-O-Seal Washer - through 15 HP
	PENS23619	S23619	15	Capscrew, ½-13 x 1" - 3 Phase only
	PEN168300400	16830-0400	17	Hardware Kit
	PEN334508042	33450-8042	18	Gasket (Volute Discharge)
	PEN334508041	33450-8041	19	Gasket (Volute Suction)
	PEN168300100	16830-0100	20	Volute (CSPH, CSPH2)
	PEN168300120	16830-0120	22	Wear Ring
	PENS23619	S23619	23A	Capscrew, ½-13 x 1" - 7½ HP; 1 Phase only

QUALITY POOL SUPPLY

Code	New Product Number	Old Product Number	Description

Sta-Rite Trap Kits

PENPKG115	PKG115	5" Dura-Glas Trap (1½" suction)
PENPKG118	PKG118	1½" x 2" Suction Increaser Fitting
PENPKG161	PKG161	6" Duraglas Trap (2" Suction)
PENPKG175	PKG175	4" JS Series Plastic Trap
PENU7911	U79-11	Lid wrench for 5" Dura-Glas Trap

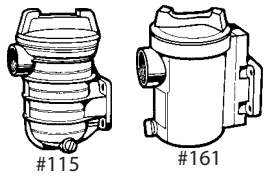

Package No. 115
5" Plastic Trap

PENC3139P1	C3-139P1	1	Cover
PENU9229	U9-229	2	O-Ring, Cover (Can Sub 0-218)
AEQO218	O-218	2	O-Ring, Cover
PENC10833P	C108-33P	3	5" Strainer Basket
PENC15353P1	C153-53P1	4	Trap Body
PENC20123	C20-123	5	Gasket
PENU178920P	U178-920P	6	Pipe plug, ¼" NPT
PENU9359	U9-359	6A	O-Ring
PENU3064SS	U30-64SS	7	Capscrew, 5⁄16-18 x ¼" (4 each required)
PENU4311SS	U43-11SS	8	Lockwasher (4 each required)
PENU4341SS	U43-41SS	9	Washer, Flat (4 each required)

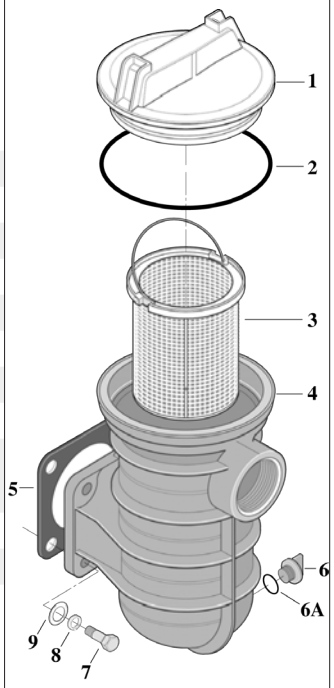

NOTE: For complete suction trap assembly, order Package 115

Package No. 115
6" Plastic Trap

PEN169200011	16920-0011	1	Lid
PEN169200012	16920-0012	2	O-Ring
PEN169200017	16920-0017	3	Strainer Basket
PENC25358P	C253-58P	4	Trap and Adapter Assembly
PENC20123	C20-123	5	Gasket
PENU178920P	U178-920P	6	Drain Plug, ¼" NPT
PENU9359	U9-359	6A	O-Ring
PENU3064SS	U30-64SS	7	Capscrew, 5⁄16-18 x ¼" (4 each required)
PENU4311SS	U43-11SS	8	Lockwasher, 5⁄16" (4 each required)
PENU4341SS	U43-41SS	9	Washer, 5⁄16" Flat (4 each required)

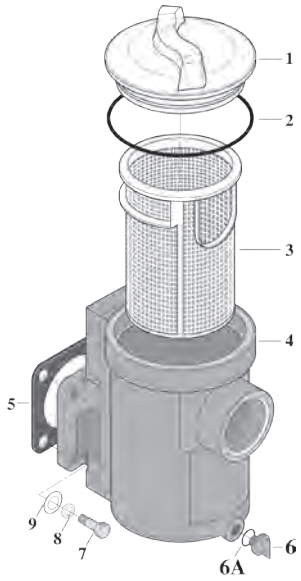

All items cataloged are normally stocked unless noted.

Not Stocked While Supplies Last

STA-RITE

Package No. 51, 74, 98
Cast Iron Traps

Code	New Product Number	Old Product Number		Description	
	PENPKG115	C154-18D	1	Handle Assembly	51, 98 & 74
	PENC330	C3-30	2	Cover	51
	PENC3105	C3-105	2	Cover	98
	PENU946	U9-46	3	Cover O-ring Can substitute O-13	51
	AEQO13	O-13	3	Cover O-ring (U9-46)	51
	PENU9171	U9-171	3	Cover O-ring Can substitute O-142	98
	AQPAPCO2398	O-142	3	Cover O-ring (U9-171)	98
	AEQO89	O-89	3	Cover O-ring	74
	PENC10811P	C108-11P	4	Strainer Basket	51
	PEN164010030	16401-0030	4	Strainer Basket	98
	PENC535B	C53-5B	5	Trap Body	51
	PENC2019	C20-19	7	Gasket	51, 98 & 74

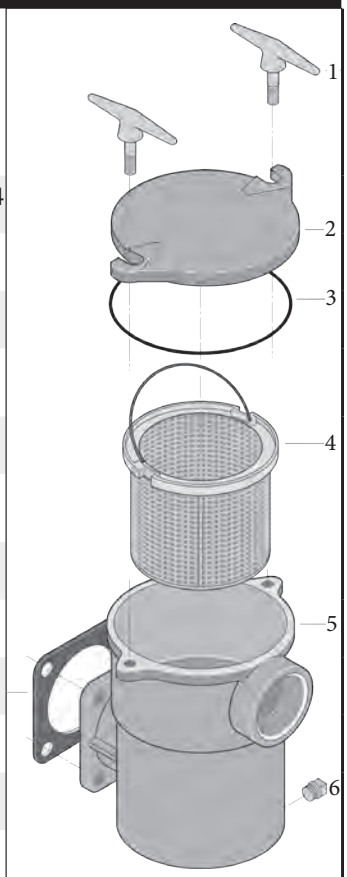

PKG	TRAP SIZE	HANDLES
51	6"	2
98	8"	4
74	11"	4

STA-RITE

Package No. 175
4" Plastic Trap

	PEN171500012	17150-0012	1	Knob
	PEN171500011	17150-0011	2	Lock Bar Assembly
	PEN171500007	17150-0007	4	Seal
	PEN162000009	16200-0009	5	Strainer Basket
	PENU178920P	U178-920P	7	Plug, ¼" NPT
	PENU9359	U9-359	7A	O-Ring
	PENU9226	U9-226	8	O-Ring

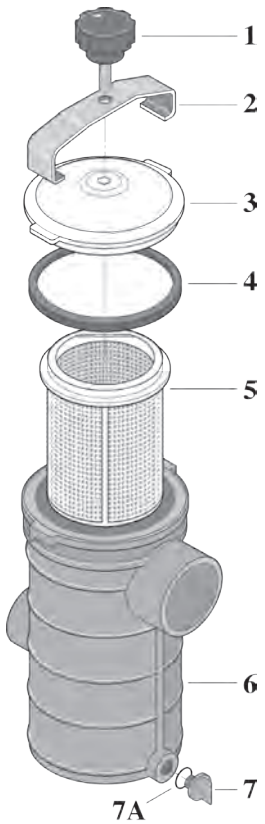

All items cataloged are normally stocked unless noted.
Not Stocked While Supplies Last

QUALITY POOL SUPPLY

Code	New Product Number	Old Product Number	Description

PENTAIR

Dynamo

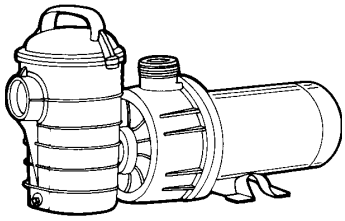

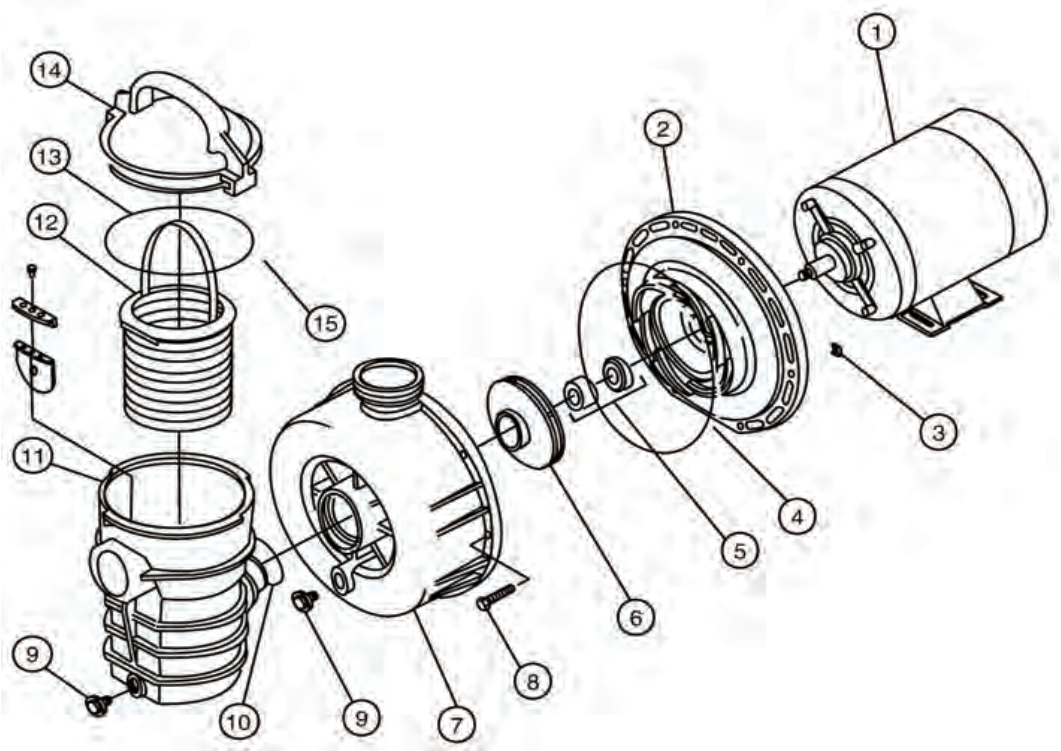

			1	Replacement Motor - See Pages 128-129
	PEN354632	354632	2	Diffuser ¾ HP (After April 1993)
	PEN354633	354633	2	Diffuser 1 HP and 1½ HP
	PEN354634	354634	4	O-ring, Pump Housing, For Newer Pumps
	AEQO163	O-163	4	O-ring, Pump Housing, (354535)
	AQPAPCAS200	AS-200	5	Shaft Seal (Oem No. 354545S)
	PEN354552	354552	6	Impeller, ¾ HP
	PEN355122	355122	6	Impeller, 1 HP
	PEN354630	354630	7	Housing Body
	PENU178920P	U178-920P	9	Replaces 154481
	AEQO41	O-41	10	O-ring, Trap To Housing (Replaces 273062)
	PEN273062	273062	10	O-ring, Trap To Housing (Pentair OEM O-ring)
	PEN354530	354530	11	Trap Body Only
	PEN354548	354548	12	Basket
	PEN354533	354533	13	Lid O-ring
	PEN354531	354531	14	Lid

All items cataloged are normally stocked unless noted.

Not Stocked While Supplies Last

Code	New Product Number	Old Product Number	Description	

PENTAIR

SuperFlo

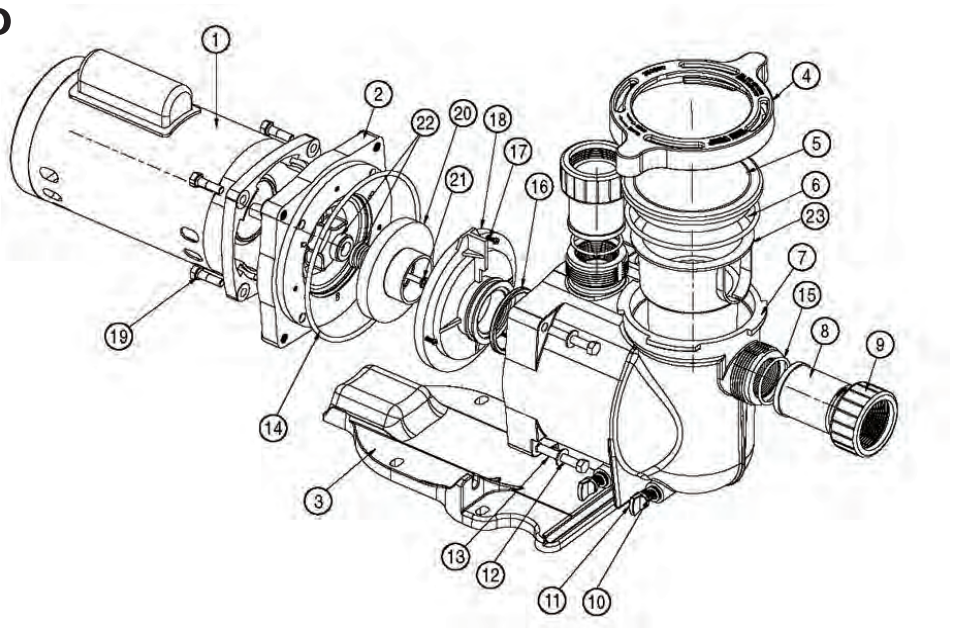

	PENPKG115	356012	2	Seal Plate
	PEN350094	350094	3	Base
	PEN350090	350090	4	Clamp, Ramp & Cam
	PEN350091	350091	5	Lid
	PEN357255Z	357255	6	O-Ring, Lid #2-357
	PEN350089	350089	7	Volute
	PEN192115Z	192115	10	O-Ring Drain Plug, 2 Req.
	PEN071131Z	071131	11	Drain Plug, 2 Req
	PEN355621	355621	12	Screw ¾-16 X 2¼ Hex Hd, 4 Req.
	PEN072184	072184	13	Washer ⅜ In. S/S, 4 Req.
	PEN355619	355619	14	O-Ring Seal Bracket
	PEN6020018	6020018	15	O-Ring Adapter #2-226, 2 Req.
	PEN355030	355030	16	Seal Diffuser
	PEN355334	355334	17	Screw #8-32 Hex Washer Hd, 3 Req.
	PEN355617	355617	18	Diffuser - ½ HP to 1 HP
	PEN355618	355618	18	Diffuser - 1½ HP to 2 HP
	PENU3074SS	U30-74SS	19	Hex Head Screw ⅜" - 16, 4 Req.
	PEN355043	355043	20	Impeller ½ HP and ¾ HP
	PEN355067	355067	20	Impeller 1 HP
	PEN355074	355074	20	Impeller 1½ HP
	PEN355086	355086	20	Impeller 2 HP
	PEN355093	355093	20	Impeller 2½ HP
	PEN355389	355389	21	Screw, Impeller Locking
	PEN354545S	354545S	22	Seal Set
	PEN355667	355667	23	Basket, Large
	PEN350157	350157	24	Kit Union Superflo® (Items No. 8, 9, 15)

All items cataloged are normally stocked unless noted.
Not Stocked While Supplies Last

QUALITY POOL SUPPLY

PENTAIR

SuperMax

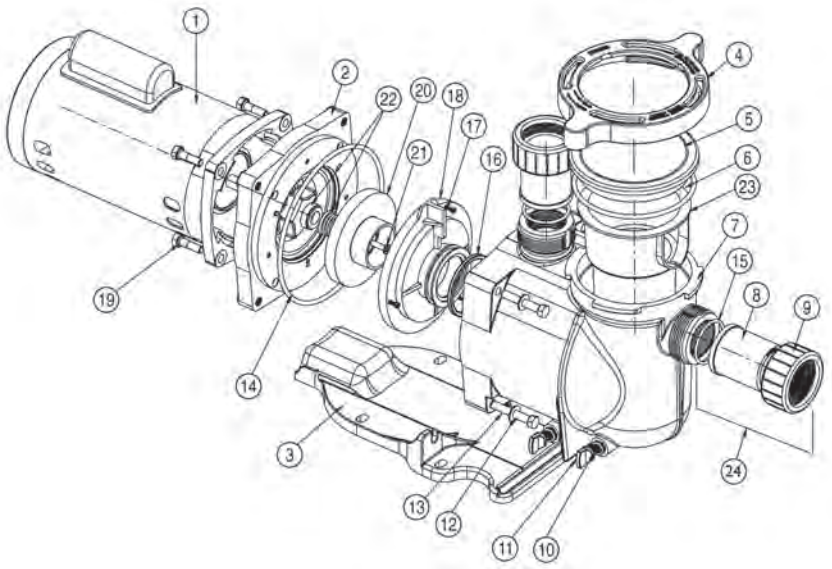

Code	New Product Number	Old Product Number	Description	
	PENPKG115	355612	2	Seal Plate, Black
	PEN351094	351094	3	Base, Black
	PEN351090	351090	4	Clamp, Ramp & Cam, Black
	PEN350091	350091	5	Lid
	PEN357255Z	357255	6	O-ring, Lid #2-357
	PEN351089	351089	7	Volute, Black
	PEN350093	350093	8	Adapter, 2 req.
	PEN270141	270141	9	Nut, 2 req.
	PEN192115Z	192115	10	O-Ring Drain Plug, 2 req.
	PEN357161Z	357161	11	Drain Plug, 2 req.
	PEN355621	355621	12	Screw ¾-16 x 2¼ HEX HD,4 req.
	PEN072184	072184	13	Washer ⅜ in. S/S, 4 req.
	PEN355619	355619	14	O-Ring Seal Bracket
	PEN6020018	6020018	15	O-Ring Adapter #2-226, 2 req.
	PEN355030	355030	16	Seal Diffuser
	PEN355334	355334	17	Screw #8-32 HEX Washer HD, 3 req.
	PEN355617	355617	18	Diffuser, ½ HP, ¾ HP, 1 HP
	PEN355618	355618	18	Diffuser, 1½ HP, 2 HP
	PEN350170	350170	18	Diffuser, 2½ HP
	PENU3074SS	U30-74SS	19	Hex head screw, ⅜, 16, 4 req. (Replaces 354290)
	PEN355043	355043	20	Impeller ½ HP, ¾ HP
	PEN355067	355067	20	Impeller 1 HP, 1 HP 2-Speed
	PEN355074	355074	20	Impeller 1½ HP, 1½ HP 2-Speed
	PEN355086	355086	20	Impeller 2 HP, 2 HP 2-Speed
	PEN355093	355093	20	Impeller 2½ HP
	PEN355389	355389	21	Screw, Impeller Locking
	PEN354545S	354545S	22	Seal Set
	PEN355667	355667	23	Basket, Large
	PEN351157	351157	24	SuperMax Union Kit (includes 2 of Items 8, 9, & 15)

All items cataloged are normally stocked unless noted.

Not Stocked While Supplies Last

PENTAIR
WhisperFlo

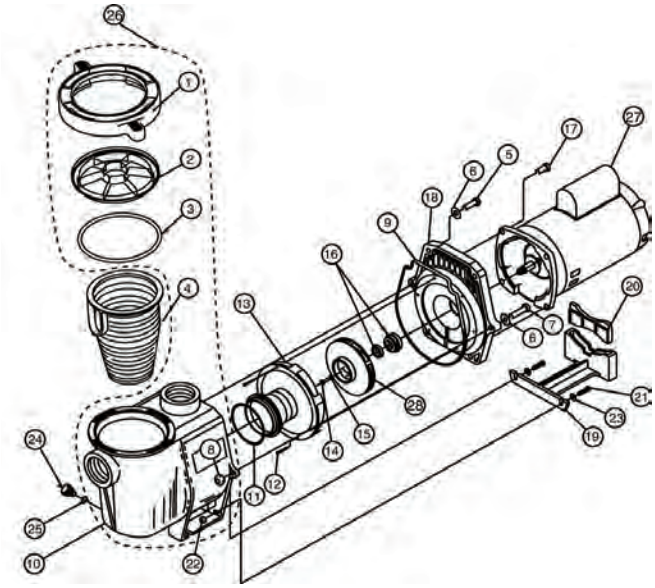

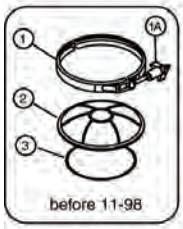

Code	New Product Number	Old Product Number	Description	
	PENPKG115	357199	1	Clamp, Cam & Ramp, almond
	PEN071136Z	071136Z	1A	Knob, only, band clamp assembly (before 11/96)
	PEN070711	070711	1B	band clamp assembly, complete, SS (before 11/98)
	PEN357151	357151	2	Cover, clear, WFE pump
	PEN070795	070795	2A	Cover, clear, AQ/WFE pump (before 11/98)
	PEN350013Z	350013	3	WFE cover o-ring
	PEN071422	071422	3A	AQ/WFE cover o-ring (before 11/98)
	PEN070387Z	070387	4	Basket
	PEN070430	070430	5	⅜" - 16 x 1¼" hex bolt, SS (4 req.)
	PEN072184	072184	6	⅜" - ID x 13⁄16" OD washer, SS (6 req.)
	PEN070431	070431	7	⅜" - 16 x 1¾" hex bolt, SS (6 req.)
	PEN071403	071403	8	⅜" - 16 hex nut, SS (2 req.)
	PEN357102Z	357102	9	Seal Plate Gasket, Almond
	PEN350015	350015	10	Volute, Almond
	PEN355227Z	355227	11	Diffuser o-ring, WFE
	PEN071660Z	071660	12	Diffuser screw WFE (2 req.)
	PEN072927	072927	13	Diffuser assembly, WFE, ½ to 2½ HP
	PEN071652Z	071652	14	Reverse thread impeller screw
	PEN075713	075713	15	Rubber impeller washer, WFE
	PEN071734S	071734S	16	Seal assembly
	PEN070429Z	070429	17	⅜" - 16 × ⅞" hex bolt, SS (4 req.)
	PEN350202	350202	18	Sealplate kit, Almond (includes items 9, 16, 18)
	PEN070927	070927	19	Foot , WFW, Almond
	PEN070929	070929	20	Foot insert, WFW, Almond
	PEN071657Z	071657	21	¼" - 20 × 1" screw, SS (2 req.)
	PEN071406	071406	22	¼" - 20 × 1" hex nut, SS (2 req.)
	PEN072183	072183	23	¼" ID × ⅝" OD washer (2 req.)
	PEN071131Z	071131	24	Drain plug, Almond (2 req.)
	PEN192115Z	192115	25	Drain plug o-ring (2 req.)
	PEN357149	357149	26	Volute/Sealplate kit, Almond (items 1-4, 9, 10, 16, 18, 24, 25)
	PEN073126	073126	28	Impeller, WF-23, ¾ Hp
	PEN073127	073127	28	Impeller, WF-24, 1 Hp
	PEN073128	073128	28	Impeller, WF-26, 1½ Hp

QUALITY POOL SUPPLY

Executive Wet End

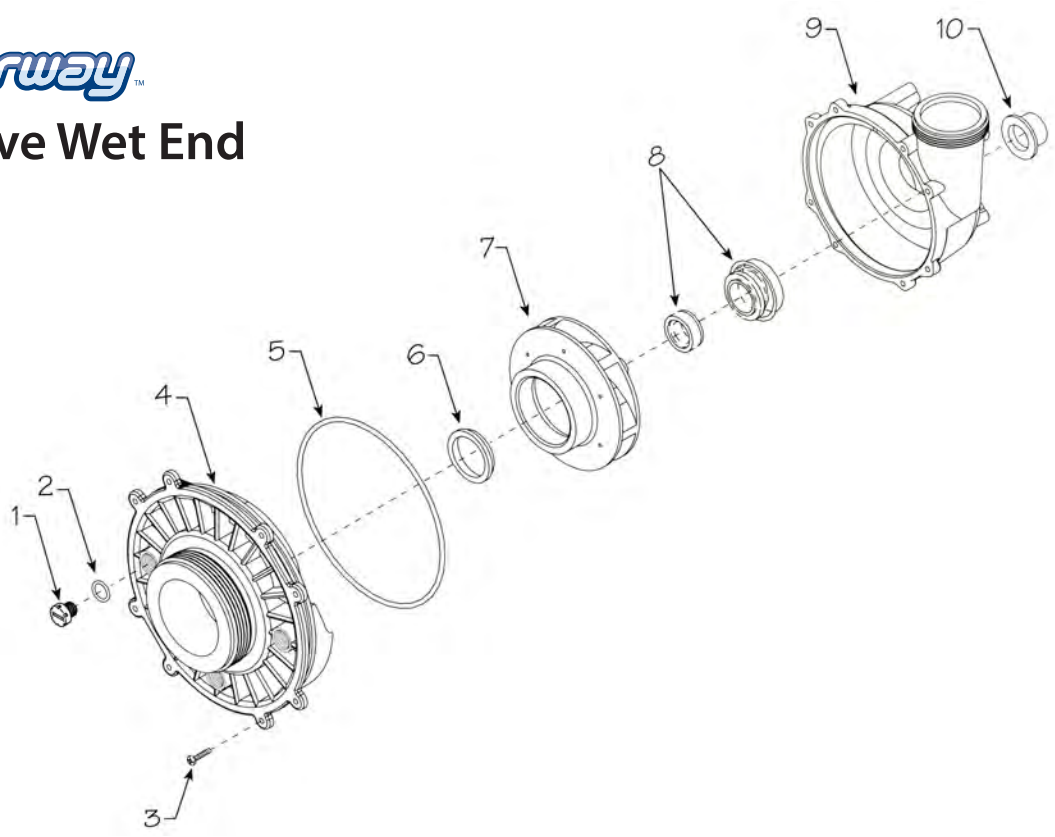

Code	New Product Number	Old Product Number		Description
	WWP7151201	715-1201	1	Drain Plug - ⅜" Threaded
	WWP8050112	805-0112	2	Drain Plug O-ring
	WWP8191110	819-1110	3	Screw
	WWP3111210	311-1210	4	Face Plate 2½"
	WWP3111220	311-1220	4	Face Plate 2"
	WWP8050261	805-0261	5	Face Plate O-ring
	WWP3191370	319-1370	6	Wear Ring - 4 and 5 HP Pumps
	WWP3191380	319-1380	6	Wear Ring - 1, 2 and 3 HP Pumps
	WWP3104230	310-4230	7	Impeller - ¾ HP
	WWP3104220	310-4220	7	Impeller - 1 HP
	WWP3104210	310-4210	7	Impeller - 2 HP
	WWP3104200	310-4200	7	Impeller - 3 HP
	WWP3104190	310-4190	7	Impeller - 4 HP for 56 Frame
	WWP3104180	310-4180	7	Impeller - 5 HP for 56 Frame
	WWP3193100B	319-3100B	8	Shaft Seal Assembly
	WWP3151240	315-1240	9	Volute - 48 Frame
	WWP3151260B	315-1260B	9	Volute with 56 Frame Inserts
	WWP3131400	313-1400	10	Slinger
	WWP3101860	310-1860		Complete Wet End - 2½" Intake 4 HP 48 Frame (used on Royal Spas & many others)
	WWP3101740	310-1740		Complete Wet End - 2" Intake 4 HP 56 Frame
	WWP3101510	310-1510		Complete Wet End - 2½" Intake 5 HP 56 Frame

All items cataloged are normally stocked unless noted.

Not Stocked While Supplies Last

Hi-Flo Wet End

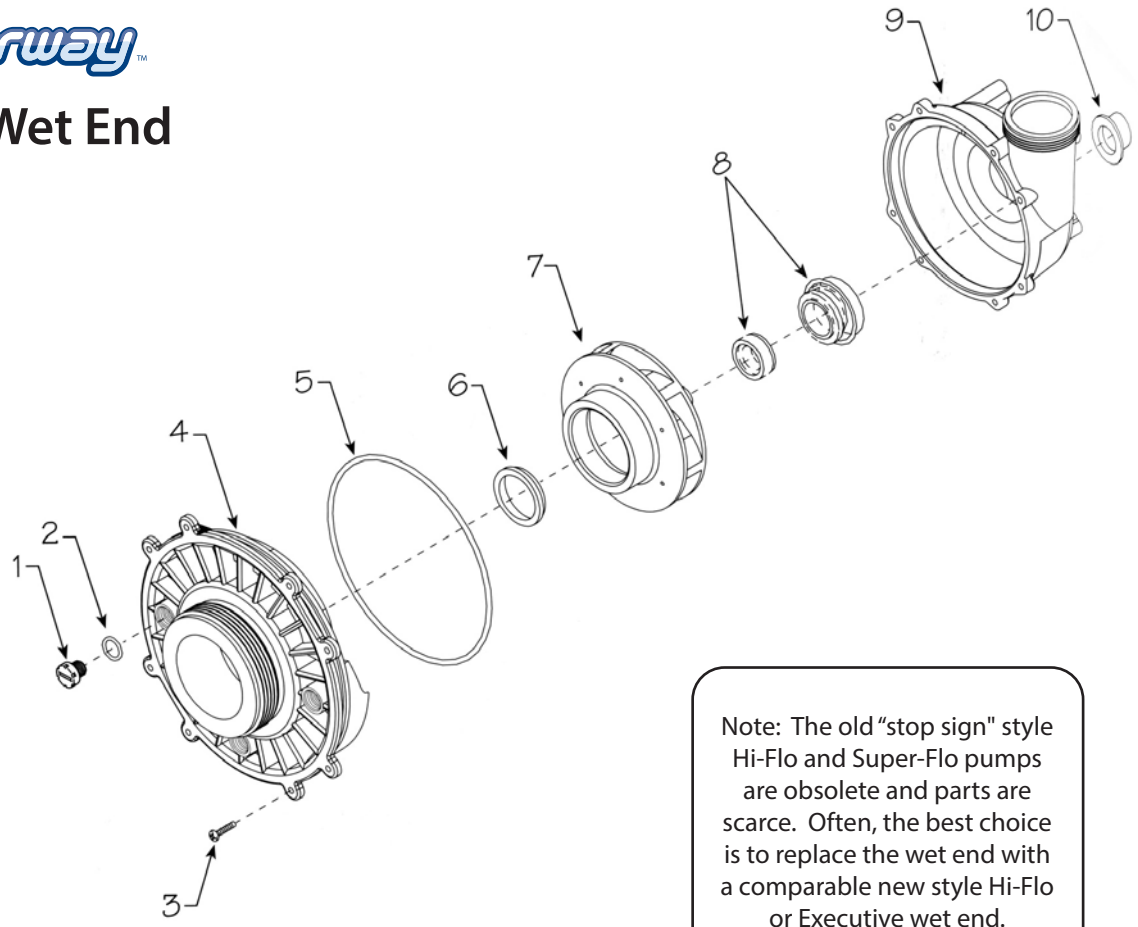

Note: The old "stop sign" style Hi-Flo and Super-Flo pumps are obsolete and parts are scarce. Often, the best choice is to replace the wet end with a comparable new style Hi-Flo or Executive wet end.

Code	New Product Number	Old Product Number		Description
	WWP7151201	715-1201	1	Drain Plug - 3/8" Threaded
	WWP8050112	805-0112	2	Drain Plug O-ring
	WWP8191110	819-1110	3	Screw
	WWP3112140	311-2140	4	Volute Faceplace with 2" Intake
	AQPAPCO2387	O-108	5	Volute Faceplate O-ring (805-0256)
	WWP3191390	319-1390	6	Sleeve - 1 and 1.5 HP Impellers
	WWP3104000	310-4000	7	Impeller - 1 HP
	WWP3104010	310-4010	7	Impeller - 1.5 HP
	WWP3104030	310-4030	7	Impeller - 2 HP
	WWP3104020	310-4020	7	Impeller - 3 HP
	WWP3104050	310-4050	7	Impeller - 4 HP
	WWP3193100B	319-3100B	8	Shaft Seal Assembly
	WWP3152500	315-2500	9	Volute
	WWP3131400	313-1400	10	Slinger
	WWP3101140SD	310-1140SD		Complete Wet End Assembly - 2" 1.5 HP
	WWP3101141SD	310-1141SD		Complete Wet End Assembly - 2" 2 HP
	WWP3101150SD	310-1150SD		Complete Wet End Assembly - 2" 3 HP
	WWP3101160SD	310-1160SD		Complete Wet End Assembly - 2" 4 HP

QUALITY POOL SUPPLY

Center Discharge Pump

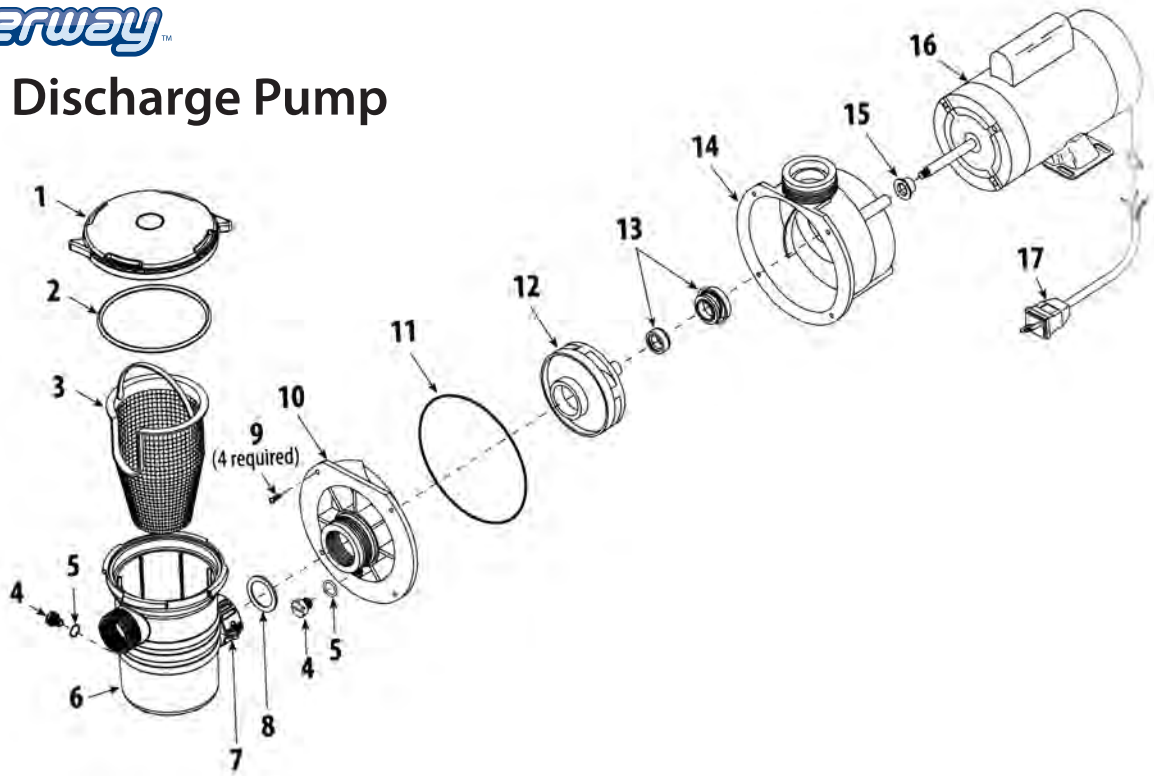

Code	New Product Number	Old Product Number		Description
	WWP3194100B	319-4100B	1	Lid and Nut Champion | SMF Pump 2-pc Style (2014)
	WWP3193260	319-3260	1	Lid - 6" Trap, self locking
	WWP8050436	805-0436	2	Lid O-ring
	WWP7151201	715-1201	4	Drain Plug - ⅜" Threaded
	WWP8050112	805-0112	5	Drain Plug O-ring (Can Substitute O-39)
	WWP7114000	711-4000	8	Gasket for 1½ Union
	WWP8191110	819-1110	9	Screw
	WWP3111070	311-1070	10	Volute Faceplate (Replaces 311-1110)
	AEQO139	O-139	11	Volute Faceplate O-ring, (805-0252)
	WWP3105120	310-5120	12	Impeller .75 HP
	WWP3105130	310-5130	12	Impeller 1 HP
	WWP3105140	310-5140	12	Impeller 1.5 HP
	WWP3105200	310-5200	12	Impeller 2 HP
	WWP3193100B	319-3100B	13	Shaft Seal Assembly
	WWP3151120	315-1120	14	Volute
	WWP3151050	315-1050	14A	Volute - Matches Jacuzzi Self-Aligning unions (center discharge)
	WWP3131400	313-1400	15	Slinger - (used with all Waterway pumps)
	WWP3101120	310-1120		Complete Wet End Assembly - .75 HP
	WWP3101130	310-1130		Complete Wet End Assembly - 1 HP
	WWP3101140	310-1140		Complete Wet End Assembly - 1.5 HP
	WWP3101141	310-1141		Complete Wet End Assembly - 2 HP

All items cataloged are normally stocked unless noted.

Not Stocked While Supplies Last

Champion 56-Frame Pump

Common Replacement Parts

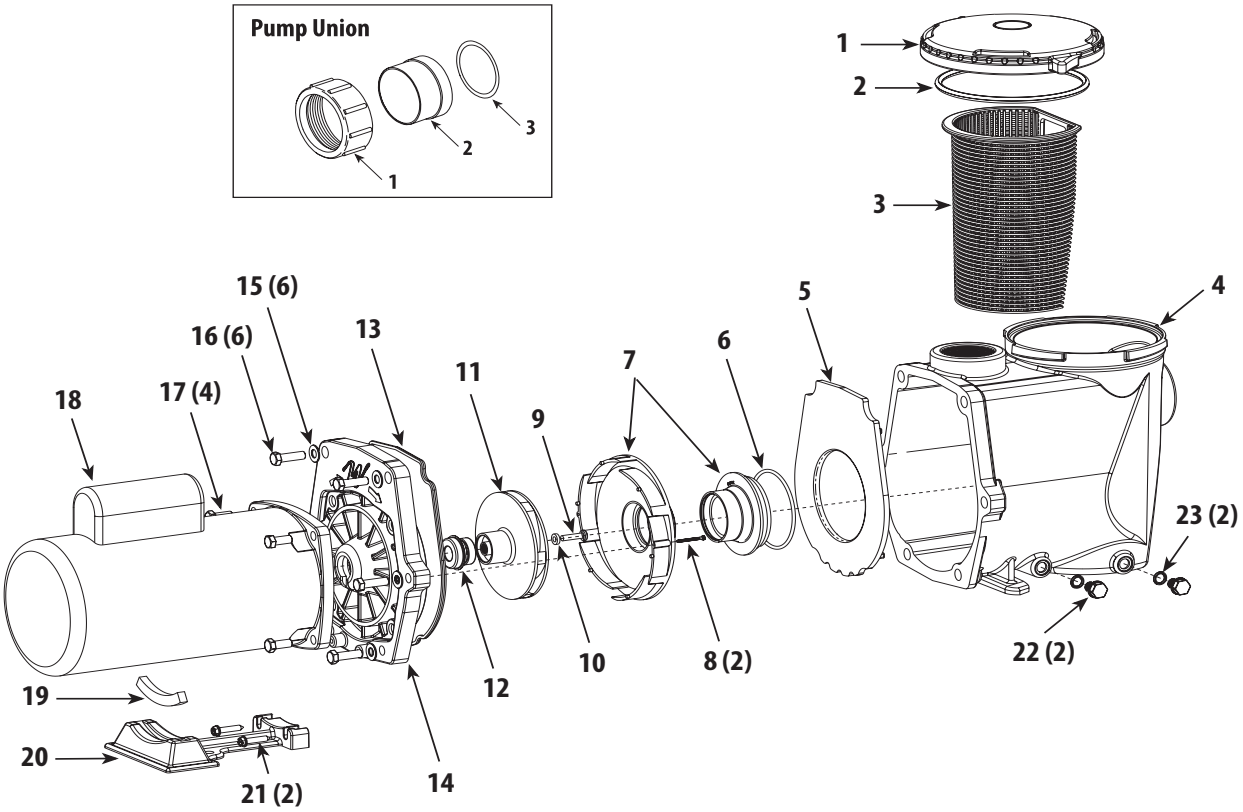

Code	New Product Number	Old Product Number		Description
	WWP3194100B	319-4100B	1	Lid and Nut Champion | SMF Pump 2-pc Style (2014)
	WWP3193260	319-3260	1	Trap Lid
	WWP8050436	805-0436	2	Trap Lid O-Ring
	WWP3191430B	319-1430B	3	Basket with Extension
	WWP8050238	805-0238	6	Diffuser O-Ring
	WWP3107470	310-7470	7	Diffuser Assembly
	WWP3107410	310-7410	11	Impeller for CHAMPS-110
	WWP3107420	310-7420	11	Impeller for CHAMPS-115
	WWP3107430	310-7430	11	Impeller for CHAMPS-120
	WWP3193100B	319-3100B	12	Shaft Seal
	WWP8061400	806-1400	13	Faceplate Gasket (Replaces 711-1400)
	WWP7151201	715-1201	22	Drain Plug (2 per pump)
	WWP8050112	805-0112	23	Drain Plug O-Ring (2 per pump)
	WWP7114030	711-4030		Union O-Ring

All items cataloged are normally stocked unless noted.
Not Stocked While Supplies Last

QUALITY POOL SUPPLY

Hi-Flo Side Discharge Pump

Common Replacement Parts

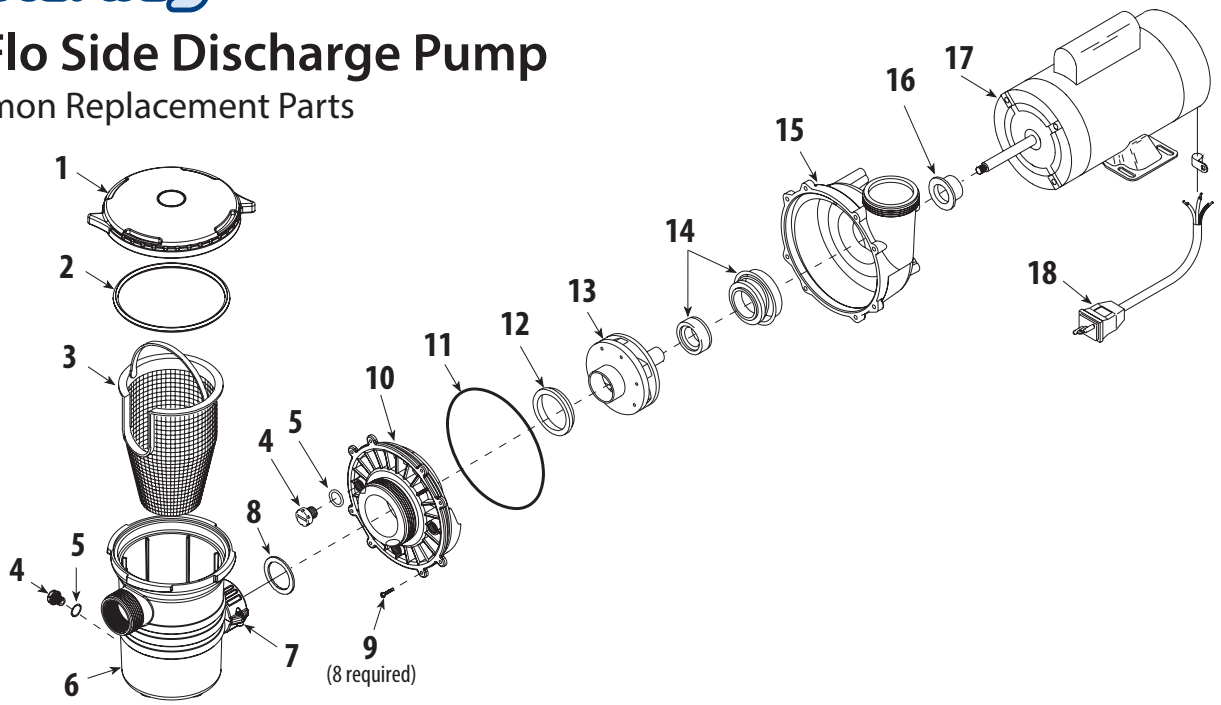

Code	New Product Number	Old Product Number	Description	
	WWP3194100B	319-4100B	1	Lid and Nut Champion | SMF Pump 2-pc Style (2014)
	WWP3193260	319-3260	1	Trap Lid
	WWP8050436	805-0436	2	Trap Lid O-Ring
	WWP7151201	715-1201	4	Drain Plug - ⅜" Quarter Slot
	WWP8050112	805-0112	5	Drain Plug O-Ring
	WWP3192170	319-2170	6	Trap Body 6" - 1-1/2" FPT/Buttress x 2" Union Flange
	WWP4005161	400-5161	7	Split Nut with Screw - 2"
	WWP7114010	711-4010	8	Union Gasket - 2"
	WWP8191110	819-1110	9	Faceplate Screw (8 required)
	WWP3112140	311-2140	10	Faceplate - 2" Intake Side Discharge
	WWP8050256	805-0256	11	Faceplate O-Ring
	WWP3191390	319-1390	12	Wear Ring
	WWP3104000	310-4000	13	Impeller Assembly - 1 HP
	WWP3104010	310-4010	13	Impeller Assembly - 1.5 HP
	WWP3104030	310-4030	13	Impeller Assembly - 2 HP
	WWP3104020	310-4020	13	Impeller Assembly - 3 HP
	WWP3193100B	319-3100B	14	Shaft Seal Kit
	WWP3152500	315-2500	15	Volute Housing - Side Discharge
	WWP3131400	313-1400	16	Slinger

All items cataloged are normally stocked unless noted.

Not Stocked While Supplies Last

EX2 Pump Wet End

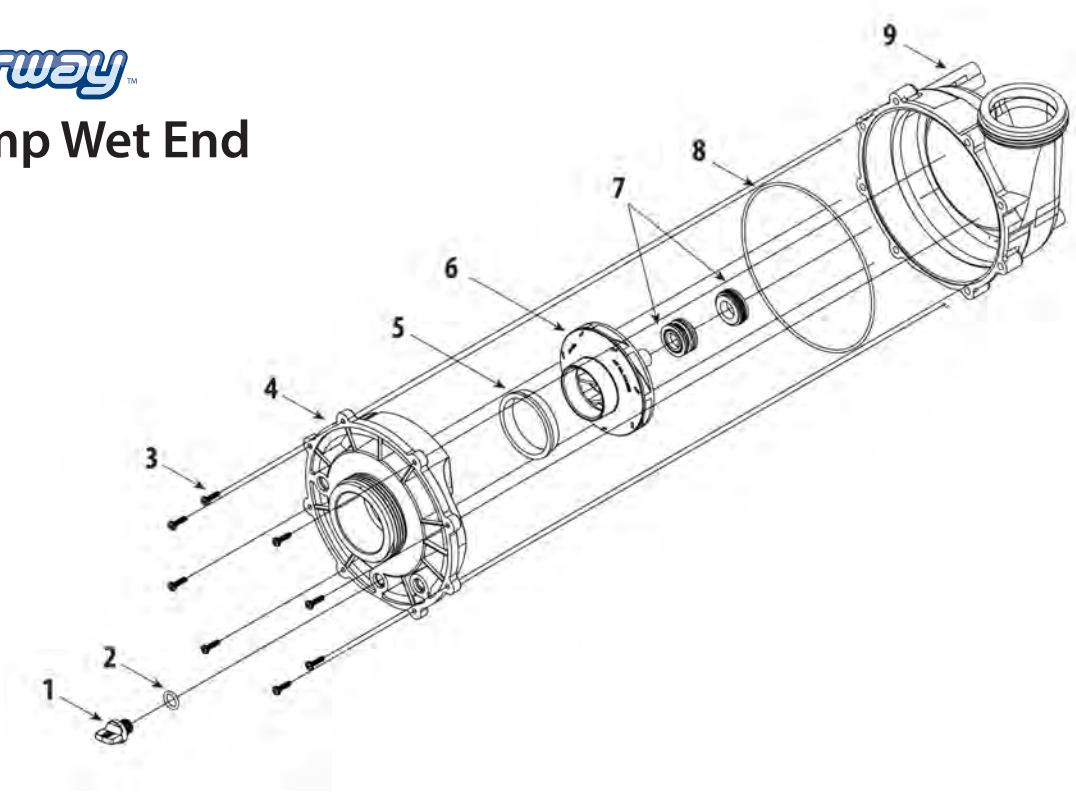

Code	New Product Number	Old Product Number		Description
	WWP7154020	715-4020	1	Drain Plug
	WWP8050112	805-0112	2	Drain Plug O-Ring
	WWP8191110	819-1110	3	Faceplate Screw (8 Required)
	WWP3112311	311-2311	4	Volute Faceplate
	WWP3191270	319-1270	5	Wear Ring
	WWP3102330	310-2330	6	Impeller Assembly - 1.5 HP
	WWP3102340	310-2340	6	Impeller Assembly - 2 HP
	WWP3102300	310-2300	6	Impeller Assembly - 2.5 HP
	WWP3102350	310-2350	6	Impeller Assembly - 3 HP
	AQPAPCAS200	AS-200	7	Pump Seal Kit (319-3010B)
	WWP8050164	805-0164	8	Housing O-Ring
	WWP3152301	315-2301	9	Volute Housing - 48 frame
	WWP3152311	315-2311	9	Volute Housing - 56 frame
	WWP3102450	310-2450	1.5	HP wet end, 48 frame
	WWP3102460	310-2460	2	HP wet end, 48 frame
	WWP3102470	310-2470	2.5	HP wet end, 48 frame
	WWP3102480	310-2480	3	HP wet end, 48 frame
	WWP3102370	310-2370	2	HP wet end, 56 frame
	WWP3102380	310-2380	3	HP wet end, 56 frame

QUALITY POOL SUPPLY

Waterway

Spa Flo & Iron Might Wet End

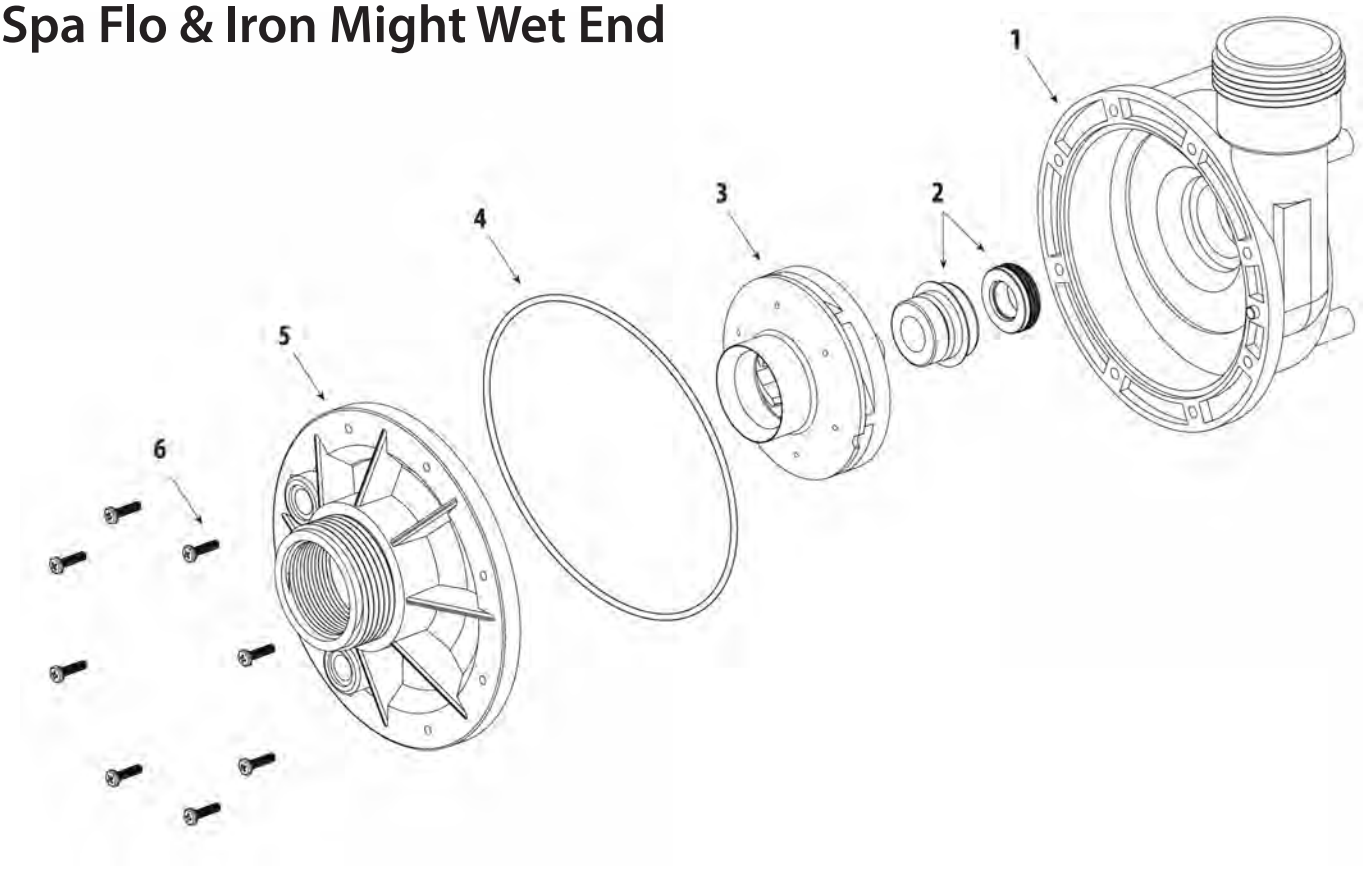

Code	New Product Number	Old Product Number	Description	
	WWP3151060	315-1060	1	Volute
	WWP3193100B	319-3100B	2	Pump Seal Kit
	WWP3100900	310-0900	3	Iron Might Impeller Assembly (.75 HP @ 3450 RPM)
	WWP3104060	310-4060	3	Spa Flo Impeller Assembly - 1 HP
	WWP3104070	310-4070	3	Spa Flo Impeller Assembly - 1.5 HP
	WWP3104090	310-4090	3	Spa Flo Impeller Assembly - 2 HP
	WWP8050248	805-0248	4	Volute O-ring
	WWP3111060	311-1060	5	Faceplate
	WWP8191110	819-1110	6	Faceplate Screw (8 Required)
	WWP7151201	715-1201		Spa Flo Drain Plug (not pictured)
	WWP8050112	805-0112		Spa Flo Drain Plug O-ring (not pictured)
	WWP3107820	310-7820		1 HP Wet End, Complete (replaces 310-0700)
	WWP3107840	310-7840		2 HP Wet End, Complete

All items cataloged are normally stocked unless noted.

Not Stocked While Supplies Last

aquaflo

FMXP2/XP2e

*Motor may be 48 or 56 frame thru-bolt.

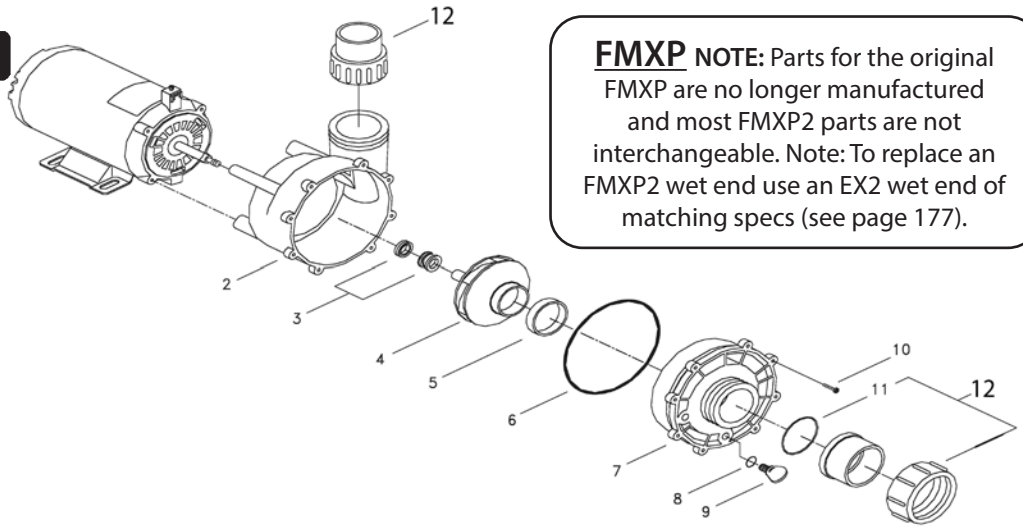

FMXP NOTE: Parts for the original FMXP are no longer manufactured and most FMXP2 parts are not interchangeable. Note: To replace an FMXP2 wet end use an EX2 wet end of matching specs (see page 177).

Code	New Product Number	Old Product Number	Description	
		FMXP2 Parts (Side Discharge)		
	AQPAF92770705	92770705	2	Volute - 48 frame
	AQPAPCAS200	AS-200	3	Seal Assembly (92500150)
	AQPAF91694110	91694110	4	Impeller, 1 HP
	AQPAF91694150	91694150	4	Impeller, 1.5 HP
	AQPAF91694200	91694200	4	Impeller, 2 HP
	AQPAF91694251	91694251	4	Impeller, 2.5 HP
	AQPAF91694300	91694300	4	Impeller, 3 HP
	AQPAF92830070	92830070	5	Wear ring
	AQPAF92200301	92200301	6	Volute O-ring
	AQPAF91231606	91231606	7	Suction cover
	AQPAPCO2433	O-25	8	Drain plug O-ring (92200060)
	AQPAF92290070	92290070	9	Drain plug
	AQPAF99730050	99730050	10	Volute screw
	AEQO43	O-43	11	2" Tail piece O-ring (92200210)
	AQPAF52272000	52272000	12	2" Union half
		FMXP2e Parts (Side Discharge)		
	AQPAF92770705	92770705	2	Volute - 48 frame
	AQPAPCAS200	AS-200	3	Seal Assembly (92500150)
	AQPAF91695150	91695150	4	Impeller, 1.5 HP
	AQPAF91695200	91695200	4	Impeller, 2 HP
	AQPAF91695250	91695250	4	Impeller, 2.5 HP
	AQPAF91695317	91695310	4	Impeller, 3 HP
	AQPAF91695401	91695401	4	Impeller, 4 HP
	AQPAF92830080	92830080	5	Wear ring
	AQPAF92200301	92200301	6	Volute O-ring
	AQPAF91231641	91231641	7	Suction cover
	AQPAPCO2433	O-25	8	Drain plug O-ring (92200060)
	AQPAF92290070	92290070	9	Drain plug
	AQPAF99730050	99730050	10	Volute screw
	AEQO43	O-43	11	2" Tail piece O-ring (92200210)
	AQPAF52272000	52272000	12	2" Union half

Note: FMXP3 parts not stocked but most can be on hand in 2-3 business days.

QUALITY POOL SUPPLY

aqua flo

FMCP & TMCP Parts (Center Discharge)
FMHP (Side Discharge) Parts

FMHP

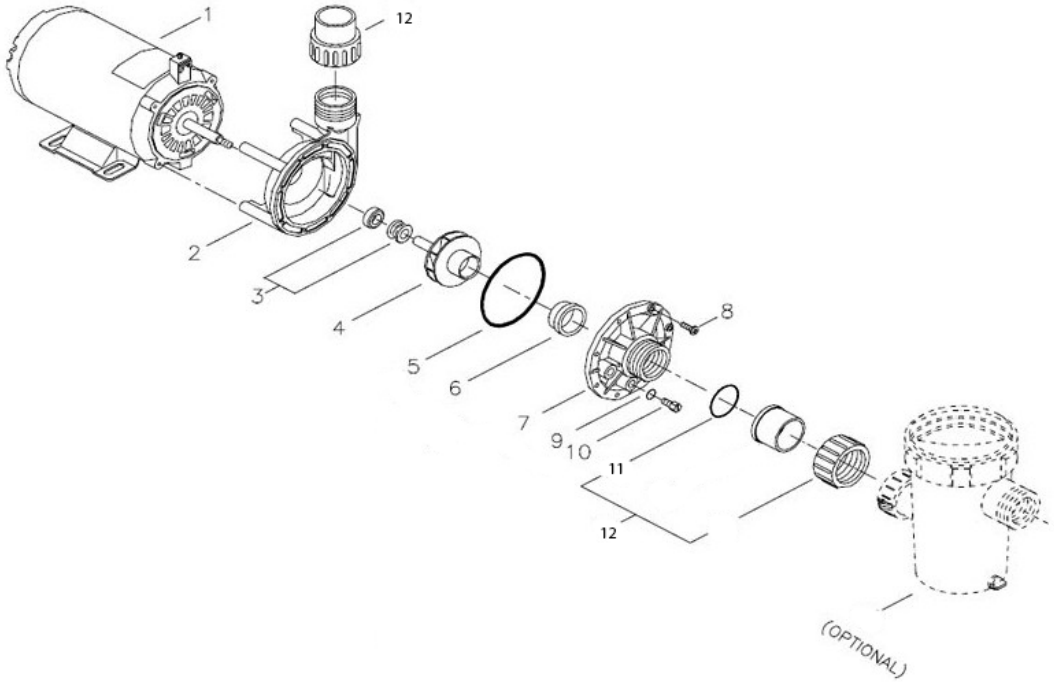

FMCP

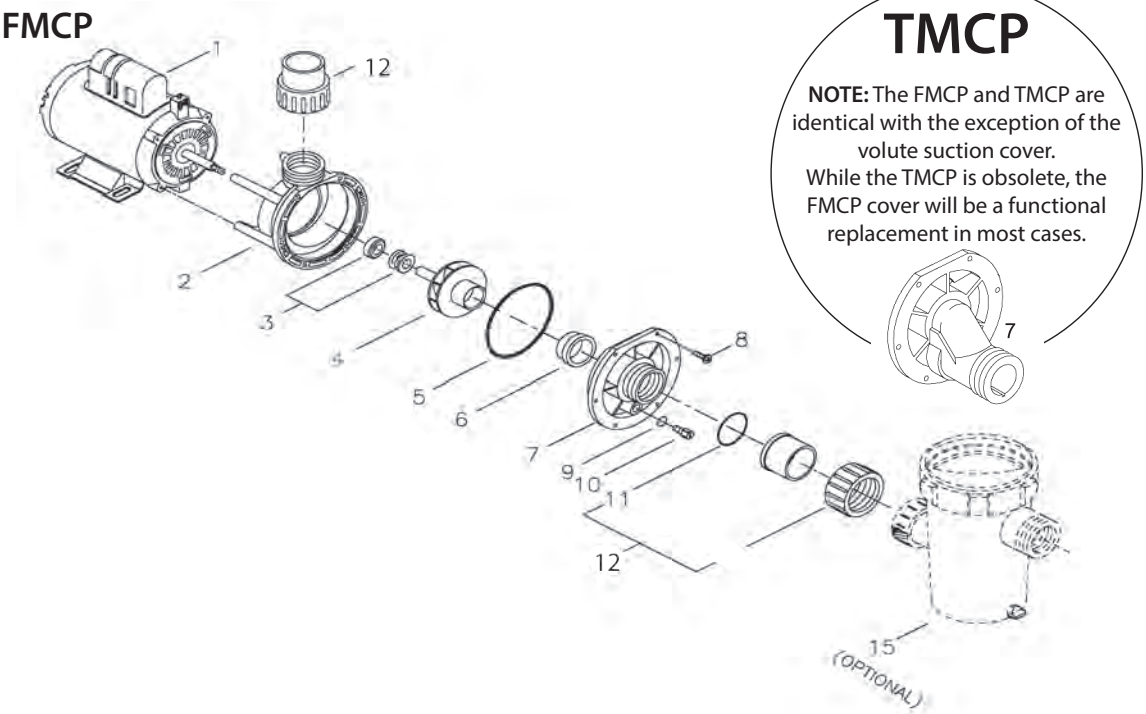

TMCP

NOTE: The FMCP and TMCP are identical with the exception of the volute suction cover.
While the TMCP is obsolete, the FMCP cover will be a functional replacement in most cases.

Note: Motors are 48-frame thru-bolt motors, either BN or EZBN series.

Code	New Product Number	Old Product Number	Description		
aqua flo		**Complete Wet Ends** *Wet ends include Key numbers #2 through #10.*			
			Series	**Complete Wet Ends**	
	AQPAF91040700000	91040700	FMHP	1.5" Side Discharge	1 HP
	AQPAF91040720000	91040720	FMHP	1.5" Side Discharge	1.5 HP
	AQPAF91040730000	91040730	FMHP	1.5" Side Discharge	2 HP
	AQPAF91040810000	91040810	FMCP	1.5" Center Discharge	1 HP
	AQPAF91040820	91040820	FMCP	1.5" Center Discharge	1.5 HP
	AQPAF91040840	91040840	FMCP	1.5" Center Discharge	2 HP
	AQPAF91041815000	91041815-000	FMP2e	2" Side Discharge	48 fr, 1.5 HP
	AQPAF91041820000	91041820-000	FMXP2e	2" Side Discharge	48 fr, 2 HP
	AQPAF91041825000	91041825-000	FMXP2e	2" Side Discharge	48 fr, 2.5 HP
	AQPAF91041920000	91041920-000	FMXP2e	2" Side Discharge	56 fr, 2 HP
	AQPAF91041925000	91041925-000	FMXP2e	2" Side Discharge	56 fr, 2.5 HP
		FMCP & TMCP Parts (Center Discharge) **FMHP (Side discharge) Parts**			
	AQPAF92770603	92770603	2	Volute - FMCP	
	AQPAF92770501	92770501	2	Volute - FMHP	
	AQPAPCAS200	AS-200	3	Seal Assembly (92500150) - 1995 to Present	
	AEQAS4702KIT	AS-4702Kit	3A	Seal Assembly (91049000) - Pre 1995	
	AQPAF91693501	91693501	4	Impeller, .5 HP	
	AQPAF91693551	91693551	4	Impeller, .75 HP	
	AQPAF91693601	91693601	4	Impeller, 1 HP	
	AQPAF91693651	91693651	4	Impeller, 1.5 HP	
	AQPAF91693700	91693700	4	Impeller, 2 HP	
	AQPAPCO2421	O-228	5	Volute O-ring (92200270) - FMCP	
	AQPAPCO2438	O-257	5	Volute O-ring (92200090) - FMHP	
	AQPAF92830062	92830062	6	Wear ring	
	AQPAF91231402	91231402	7	Suction cover - FMCP	
	AQPAF91231301	91231301	7	Suction cover - FMHP	
	AQPAF99730050	99730050	8	Volute screw	
	AEQO243	O-243	9	Drain plug O-ring (92200120)	
	AQPAF92290015	92290015	10	Drain plug	
	AQPAF92200140	92200141	11	1½" tail piece O-ring (Can sub O-49)	
	AEQO49	O-49	11	1-½" tail piece O-ring	
	AQPAF52271000	52271000	12	Union half	
	AQPAF50100120	50100120		Adapter 1½" x 2" (requires 0-49)	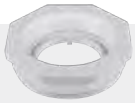

All items cataloged are normally stocked unless noted.
Not Stocked While Supplies Last

QUALITY POOL SUPPLY

Code	New Product Number	Old Product Number	Description

BALBOA water group

Dura-Jet "DJ" Spa Pump

Formerly Manufactured by Sta-Rite

Many pumps have "uprated" motors, so the best way to get the correct replacement impeller is to remove the old impeller and check the number on the back.

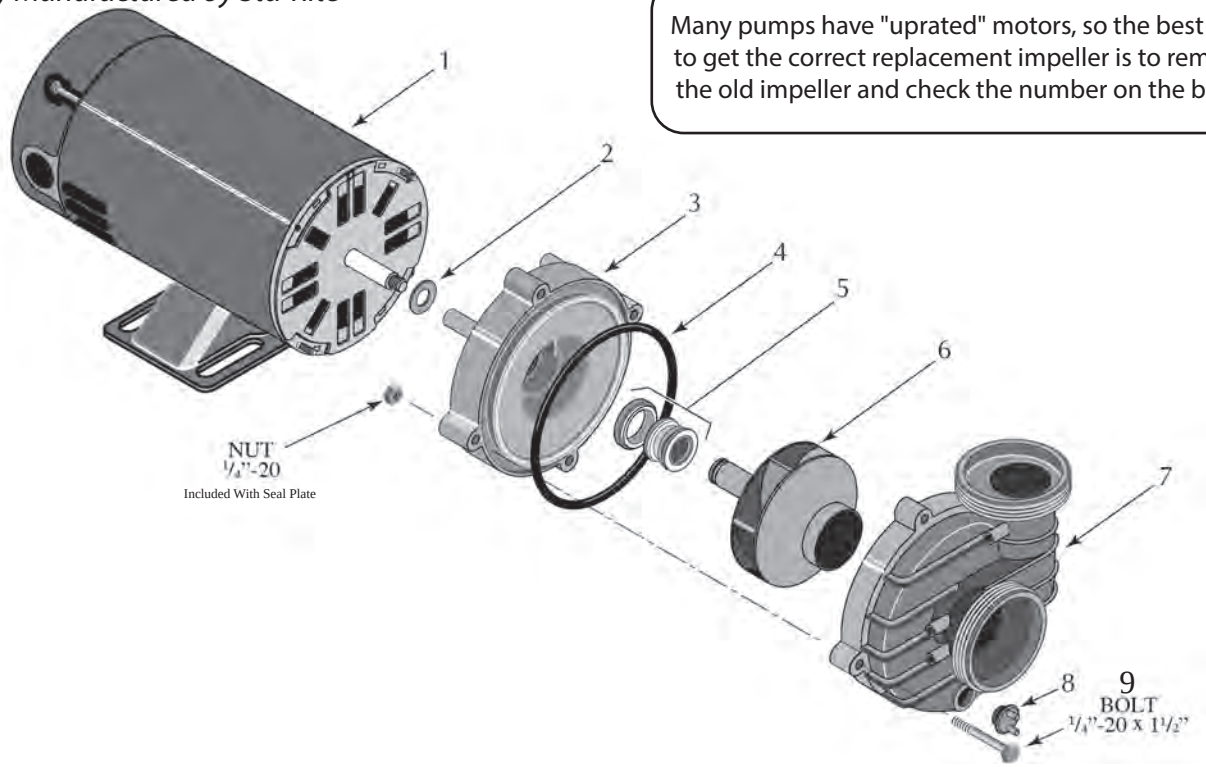

	PEN173510009	17351-0009	2	Slinger
	AEQO231	O-231	4	Volute O-ring
	AQP174000120	17400-0120	6A	1 HP Impeller
	AQP174000121	17400-0121	6B	1.5 HP Impeller (also fits 3 HP uprated)
	AQP174000122	17400-0122	6C	2 HP Impeller
	AQP174000123	17400-0123	6D	2.5 HP Impeller (also fits 4 HP uprated)
	AQP174000135	17400-0135	6E	3 HP Impeller
	AQP174000108	17400-0108	7	Front plate / volute with multiple drain plugs
	PENU178940P	U178-940P	8A	Drain plug (coarse thread)
	PENU178920P	U178-920P	8B	Drain Plug (fine thread)
	BWG6011008	6011008	9	¼" - 20 x 1½" Bolt
	AQP1215023	1215023	Wet End 1.5 HP 48/56 Fr. (only stocked in Byron Center)	
	AQP1215014	1215014	Wet End 2 HP 48/56 Fr. (only stocked in Byron Center)	

All items cataloged are normally stocked unless noted.

Not Stocked While Supplies Last

PRODUCTS

Coates Electric 189
Fafco & Horizon Solar 190
Heat Pumps 183
Heat Swapper 192
Hayward 183
Jandy 185
Pentair 186
Raypak 180
Sta-Rite 188

PARTS

Hayward 208
Laars 230
Pentair 214
Raypak 194
Raypak Quick Reference 200
Sta-Rite Max-E-Therm 226

PLEASE VISIT OUR PARTS WEBSITE:

http://www.qualitypool.com/parts/

Parts explosions for:
Pentair MiniMax Plus Parts

All items catalogued are normally stocked unless noted:
Not Stocked ✱ While Supplies Last

QUALITY POOL SUPPLY

Raypak® A Rheem® Company

- 5% Discount for 5 at a time
- Drafthood Required for Indoor Installation
- One Year Warranty

(Digital model shown)

Code	New Product Number	Old Product Number	Description	
	Millivolt - PLUS			
	RAY009192	RAY009192	Natural	206,000 BTU
	RAY009200	RAY009200	Propane	206,000 BTU
	RAY009193	RAY009193	Natural	266,000 BTU
	RAY009201	RAY009201	Propane	266,000 BTU
	RAY009194	RAY009194	Natural	336,000 BTU
	DIGITAL Electronic			
	RAY009216	RAY009216	Natural	206,000 BTU
	RAY009224	RAY009224	Propane	206,000 BTU
	RAY009217	RAY009217	Natural	266,000 BTU
	RAY009225	RAY009225	Propane	266,000 BTU
	RAY009218	RAY009218	Natural	336,000 BTU
	RAY009226	RAY009226	Propane	336,000 BTU
	RAY009219	RAY009219	Natural	406,000 BTU
CALL	RAY009227	RAY009227	Propane	406,000 BTU (Stocked in Clio and Dublin only)

Digital Panel

	DIGITAL Electronic			**Cupro Nickel** *Heat Exchanger*
	RAY014938	RAY014938	Natural	206,000 BTU
	RAY014950	RAY014950	Propane	206,000 BTU
	RAY014939	RAY014939	Natural	266,000 BTU
	RAY014951	RAY014951	Propane	266,000 BTU
	RAY014940	RAY014940	Natural	336,000 BTU
	RAY014952	RAY014952	Propane	336,000 BTU
	RAY014941	RAY014941	Natural	406,000 BTU
	RAY014953	RAY014953	Propane	406,000 BTU

Warranty Note - Once a heater is installed, it cannot be returned to us for warranty without factory approval.

		Draft Hoods For Above	
	RAY009838	RAY009838	6" Draft Hood for 206
	RAY009839	RAY009839	7" Draft Hood for 266
	RAY009840	RAY009840	8" Draft Hood for 336
	RAY009841	RAY009841	9" Draft Hood for 406
	RAY009832	RAY009832	D-2 Indoor Power Vent Fits 206 - 267
	RAY009833	RAY009833	D-2 Indoor Power Vent Fits 336 - 407

Required For Indoor Installation

All items cataloged are normally stocked unless noted.

Not Stocked ✻ While Supplies Last

Code	New Product Number	Old Product Number	Description

Raypak® A Rheem® Company

- 5% Discount for 5 at a time
- Drafthood Required for Indoor Installation
- One Year Warranty

ASME - DIGITAL

Bronze Headers, Digital Control, Electric Ignition Comes with Standard Outdoor Top

	RAY017371	RAY017371	Natural	206,000 BTU
	RAY017372	RAY017372	Natural	266,000 BTU
	RAY017373	RAY017373	Natural	336,000 BTU
	RAY017374	RAY017374	Natural	406,000 BTU

ASME - DIGITAL — Cupro Nickel Heat Exchanger

Bronze Headers, Digital Control, Electric Ignition Comes with Standard Outdoor Top

Stocked in some locations. We will transfer to your local branch at no charge to you. Please call for availability.

	RAY017399	RAY017399	Natural	206,000 BTU
	RAY017400	RAY017400	Natural	266,000 BTU
	RAY017401	RAY017401	Natural	336,000 BTU
	RAY017402	RAY017402	Natural	406,000 BTU

QUALITY POOL SUPPLY

Code	New Product Number	Old Product Number	Description

Raypak® A Rheem® Company

WARRANTY
2 Year Labor
7 Year Parts

- Titanium Heat Exchanger
- Digital Control
- R410A Refrigerant
- Scroll Compressor
- 30-60 GPM
- Voltage: 208/230V-1Ph-60Hz
- 2" PVC connection unions supplied

MODEL	R5450ti	R6450ti	R8450ti
Heat BTUH Output AHRI 1160** (80,80,80)/(80,63,80)**	103,000/97,000	119,000/113,000	140,000/130,000
C.O.P.	6.0/5.7	5.9/5.7	5.6/5.3
Min. Circuit Ampacity	29.3	33.7	41.7
Max. Breaker Size (Amps)	60	60	60
Electrical Input (kw)	5.0	5.9	7.3
Shipping Weight (lbs.)	264	341	423

** Tested to AHRI 1160
All models comply with Florida 4.0 min. C.O.P. requirement.

			Model	BTU	Pool Size
	RAY016010	RAY016010	R5450 Ti-E	103,000	16 x 32
	RAY016015	RAY016015	R6450 Ti-E	119,000	18 x 36
	RAY016033	RAY016033	R8450 Ti-E	140,000	20 x 40

Scan the QR code or use the link below to obtain detailed information about the Raypak heaters listed below.
http://www.qualitypool.com/pdf/raypak-heater-specifications.pdf

Polymer Headers, Analog Control, Electric Ignition
Comes with Standard Outdoor Top

	RAY014779	RAY014779	Natural	106,000 BTU
	RAY014781	RAY014781	Propane	106,000 BTU
	RAY014357	RAY014357		Indoor Top
	RAY014718	RAY014718		Outdoor High Wind Top

Polymer Headers, Digital Control, Electric Ignition
Comes with Standard Outdoor Top

	RAY014784	RAY014784	Natural	156,000 BTU
	RAY014786	RAY014786	Propane	156,000 BTU
	RAY014358	RAY014358		Indoor Top
	RAY014719	RAY014719		Outdoor High Wind Top

E3T Electric 3-Series
Titanium Pool and Spa Heater

The Electric 3-Series Titanium heater is the latest technology in pool and spa heating. The E3T is built with titanium heating elements and 316L stainless steel to withstand extreme pool water conditions, including salt water chlorinated pools. The E3T heater operates by utilizing the latest solid-state design and flow sensor technology. It has easy to use digital controls with diagnostics.
The compact size makes it easy to install for new constuction or replacement installations.

CALL	RAY017121	RAY017121	5.5 KW ELS-R-0005 1 T1 240V 1 Phase
CALL	RAY017122	RAY017122	11 KW ELS-R-0011-T-T1 240V 1 Phase
CALL	RAY017123	RAY017123	18 KW ELS-R-0018-1-T1 240V 1 Phase
CALL	RAY017124	RAY017124	27 KW ELS-R-0027-1-T1 240V 1 Phase

All items cataloged are normally stocked unless noted.
Not Stocked ✻ While Supplies Last

HAYWARD

Universal LowNOx

Draft Hood is Required for Indoor Installation
5% Discount for 5 at-a-time

Electronic

Code	New Product Number	Old Product Number	Description	
	HPPH150FDN	H150FDN	Natural	150,000 BTU
	HPPH200FDN	H200FDN	Natural	199,900 BTU
	HPPH200FDP	H200FDP	Propane	199,900 BTU
	HPPH250FDN	H250FDN	Natural	250,000 BTU
	HPPH250FDP	H250FDP	Propane	250,000 BTU
	HPPH300FDN	H300FDN	Natural	300,000 BTU
	HPPH350FDN	H350FDN	Natural	350,000 BTU
CALL	HPPH400FDN	H400FDN	Natural	399,900 BTU
CALL	HPPH400FDP	H400FDP	Propane	399,900 BTU

Indoor Vent Kits for Universal LowNOx

Negative Pressure - Vertical Venting

	HPPUHXNEGVT11506	UHXNEGVT11506	For 150 Heaters - 6" Adapter
	HPPUHXNEGVT12006	UHXNEGVT12006	For 200 Heaters - 6" Adapter
✻	HPPUHXNEGVT12506	UHXNEGVT12506	For 250 Heaters - 6" Adapter
◆	HPPUHXNEGVT13008	UHXNEGVT13008	For 300 Heaters - 8" Adapter
◆	HPPUHXNEGVT13508	UHXNEGVT13508	For 350 Heaters - 8" Adapter
◆	HPPUHXNEGVT14008	UHXNEGVT14008	For 400 Heaters - 8" Adapter

Positive Pressure - Horizontal Venting

◆	HPPUHXPOSHZ11506	UHXPOSHZ11506	For 150 Heaters - 6" Adapter
◆	HPPUHXPOSHZ12006	UHXPOSHZ12006	For 200 Heaters - 6" Adapter
◆	HPPUHXPOSHZ12504	UHXPOSHZ12504	For 250 Heaters - 4" Adapter
◆	HPPUHXPOSHZ12506	UHXPOSHZ12506	For 250 Heaters - 6" Adapter
◆	HPPUHXPOSHZ13008	UHXPOSHZ13008	For 300 Heaters - 8" Adapter
◆	HPPUHZPOSHZ13508	UHXPOSHZ13508	For 350 Heaters - 8" Adapter

AquaCal® SWIMMING POOL/SPA HEAT PUMPS

- Microprocessor controlled automatic defrost allows operation down to 42 degrees
- Remove the drain plug for easy winterization
- All have titanium heat exchangers with a lifetime warranty

CALL	AUTT090AHDSBTD	T090AHDSBTD	TropiCal Heat Pump 90K BTU 220V
CALL	AUTT135AHDSBTB	T135AHDSBTB	TropiCal Heat Pump 132K BTU 220V

All items cataloged are normally stocked unless noted.
◆ Not Stocked ✻ While Supplies Last

QUALITY POOL SUPPLY

Code	New Product Number	Old Product Number	Description
HAYWARD		**H-Series – Induced Draft Heater**	
	HPPH135ID1	H135ID1	Natural Gas 135,000 BTU - Digital Electronic - Cupro Nickel Heat Exchanger - Fan Assisted Combustion
HAYWARD		**Summit XL Heat Pump**	
	HPPSUMXL112	SUMXL112	112,000 BTU Expert Line
	HPPSUMXL140	SUMXL140	140,000 BTU Expert Line
HAYWARD		**Draft Hoods**	
*	HPPDHI300	DHI300	Draft Hood for 300,000 BTU Heater
*	HPPDHI250	DHI250	Draft Hood for 250,000 BTU Heater

All items cataloged are normally stocked unless noted.

Not Stocked * While Supplies Last

Code	New Product Number	Old Product Number	Description
			JXI Gas Heaters (Pro Series)
	JNDJXI200N	JXI200N	Natural Gas Heater 200,000 BTU 120/240V
CALL	JNDJXI200P	JXI200P	Propane Gas Heater 200,000 BTU 120/240V (Stocked in Perrysburg Only)
	JNDJXI260N	JXI260N	Natural Gas Heater 260,000 BTU 120/240V
	JNDJXI400N	JXI400N	Natural Gas Heater 400,000 BTU 120/240V
	JNDJXIVFKIT	JXIVFKIT	JXI Versaflo Integrated Bypass
			JXI Gas Heaters with VersaFlo (Stocked in Akron only)
	JNDJXI200NK	JXI200NK	200 Natural Gas, Copper Hx, Versaflo, Poly Headers
	JNDJXI260NK	JXI260NK	260 Natural Gas, Copper HX, Versaflo, Poly Headers
◆	JNDJXI400NK	JXI400NK	400 Natural Gas, Copper HX, Poly Headers

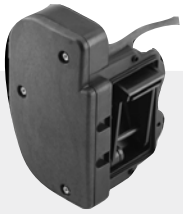

All items cataloged are normally stocked unless noted.
◆ Not Stocked ✻ While Supplies Last

QUALITY POOL SUPPLY

Code	New Product Number	Old Product Number	Description

PENTAIR

High Performance Hybrid Heater

First Ever Dual Fuel Heating Technology

BRICK AND MORTAR NO INTERNET SALES

- Gas-Fired functionality for quick heat-ups
- Onboard intelligence delivers outstanding efficiency
- TitanTough Direct-Fire Pure Titanium gas heat exchanger assures corrosion-free performance for extra-long life
- 93% thermal efficiency gas engine coupled with high performance heat pump
- Automation ready with seamless interfacing with Pentair Control Systems
- High efficiency design (four selectable modes: Heat Pump only, Gas only, Hybrid, Dual)
- Dual internal water bypass assembly automatically adjusts for waterflows up to 120 GPM without the need for an external water bypass

◆	PEN460970	460970	Black - UltraTemp ETI Heater
◆	PEN460969	460969	Almond - UltraTemp ETI Heater

PENTAIR

ETI™ 400

High Efficiency Gas Heater

- TitanTough Direct-Fire Titanium ASME certified heat exchanger
- Certified for Ultra Low NOx Emissions
- Best-in-Class Energy Efficiency for fast heat up times and energy savings
- 4" PVC or CPVC vent up to 120 ft and 6" vent up to 300 ft long
- Indoor and Outdoor rating
- Ultra-Quiet operation
- Convenient 180 degrees rotating controls panel for left or right plumbing
- Convenient front and rear gas connection capability

CALL	PEN461113	461113	400K BTU ASME Natural Gas Heater (Stocked in Byron Center Only)
CALL	PEN475971	475971	Direct Air Intake Kit (For indoor installation)
CALL	PEN475612	475612	Condensate Neutralizer Cartridge Kit
CALL	PEN476072	476072	Propane Conversion Kit

All items cataloged are normally stocked unless noted.

Not Stocked ✻ While Supplies Last

Code	New Product Number	Old Product Number	Description	
			MasterTemp© 125 High Performance Heater	
	PEN461059	461059	Mastertemp 125 Heater Natural Gas (with Cord)	120/240V
	PEN461061	461061	Mastertemp 125 Heater LP (with Cord)	120/240V
◆	PEN461063	461063	Natural Gas to Propane Conversion Kit	120/240V
◆	PEN461062	461062	Propane to Natural Gas Conversion Kit	

MasterTemp® Heater

- Rotating Digital Display
- Compact design
- Hot surface ignition (no pilot light)
- Tough & rustproof composite exterior
- Certified for lowNox emissions

Warranty

1 Year - Commercial
2 Year - Residential
3 Year - If equipment pad has at least 3 Pentair products on it

	PEN460730	460730	200,000 Natural Gas	120/240V
	PEN460732	460732	250,000 Natural Gas	120/240V
	PEN460734	460734	300,000 Natural Gas	120/240V
	PEN460736	460736	400,000 Natural Gas	120/240V

LP Conversion Kits

	PEN777071461	77707-1461	Converts 200N to LP
	PEN460741	460741	Converts 250N to LP
	PEN460755	460755	Converts 300N to LP
	PEN777071441	77707-1441	Converts 400N to LP

All items cataloged are normally stocked unless noted.
◆ Not Stocked ✻ While Supplies Last

Code	New Product Number	Old Product Number	Description
STA-RITE		**Max-E-Therm™**	Features a LED temperature readout with dual thermostat controls, temperature safety lockout, and 6-position control panel. PMG burner technology requires no outdoor draft hood.
	PENSR200HD	SR200HD	200,000 BTU Nat Gas Heavy Duty with Cupro-Nickel Heat Exchanger
	PENSR333HD	SR333HD	333,000 BTU Nat Gas Heavy Duty with Cupro-Nickel Heat Exchanger
	PENSR200NA	200N	200,000 BTU Natural
	PENSR333NA	333N	333,000 BTU Natural
	PENSR400NA	400N	400,000 BTU Natural

All heaters are natural gas.
To convert to LP requires only one orifice and one minute to change at installation.

PENTAIR		**LP Conversion Kits**	
	PEN777071461	77707-1461	Converts 200N to LP
	PEN777071451	77707-1451	Converts 333N to LP
	PEN777071441	77707-1441	Converts 400N to LP
PENTAIR		**Venting Products for Indoor Installations**	
		Vertical Venting - Negative Pressure	
	PEN777070076	77707-0076	4 X 6 Metal Flue Collar (Adapts to Type B vent double wall flue)
	PEN777070077	77707-0077	4 X 8 Metal Flue Collar (Adapts to Type B vent double wall flue)
		Horizontal or Vertical Venting - Positive Pressure	
	PEN777070086	77707-0086	Stainless Steel Appliance Adaptor (Mfg. by Heat Fab Venting)

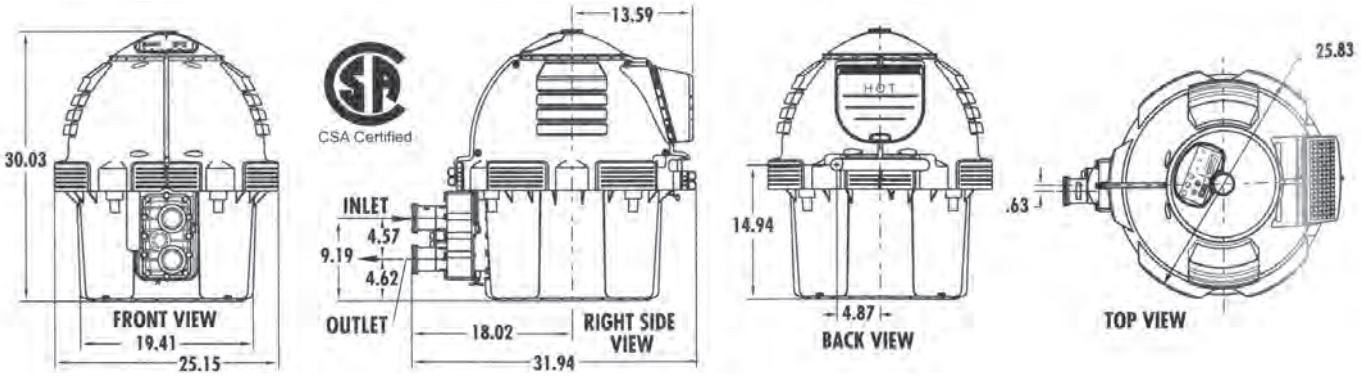

All items cataloged are normally stocked unless noted.
Not Stocked ✻ While Supplies Last

Code	New Product Number	Old Product Number	Description

Commercial Electric Heaters

NOT STOCKED. Note: Single phase requires higher amperage. Please allow 3-5 days build time, in addition to shipping time when ordering.

Larger heaters and 208/480 Volt heaters are available. Coates heaters feature stainless steel tanks, flow switches, incoloy heating elements and UL Listing.

Single Phase Heaters and Cupro Nickel Systems with Titanium Element available upon request

				Three Phase	BTU Output	Voltage
◆	COA32412CE	32412CE	12 KW	30A	41,000	240V
◆	COA32415CE	32415CE	15 KW	37A	51,000	240V
◆	COA32418CE	32418CE	18 KW	45A	61,000	240V
◆	COA32424CPH	32424CPH	24 KW	59A	82,000	240V
◆	COA32430CPH	32430CPH	30 KW	74A	102,000	240V
◆	COA32436PHS	32436PHS	36 KW	89A	123,000	240V

Stainless Steel Heat Sinks

	NPPTC015X06	1886-060C	CPVC Nipple 1½" X 6" TOE (threaded one end)
	SSRHS001	HS-001	O-ring for 1½" Sink
	SSRHS002	HS-002	O-ring for 2" Sink
✻	SSRHS100	HS-100	Nut for 1½" Sink
✻	SSRHS102	HS-102	Nut for 2" Sink

All items cataloged are normally stocked unless noted.
◆ Not Stocked ✻ While Supplies Last

Code	New Product Number	Old Product Number	Description
			ecoSAVER - Solar Heating Panels 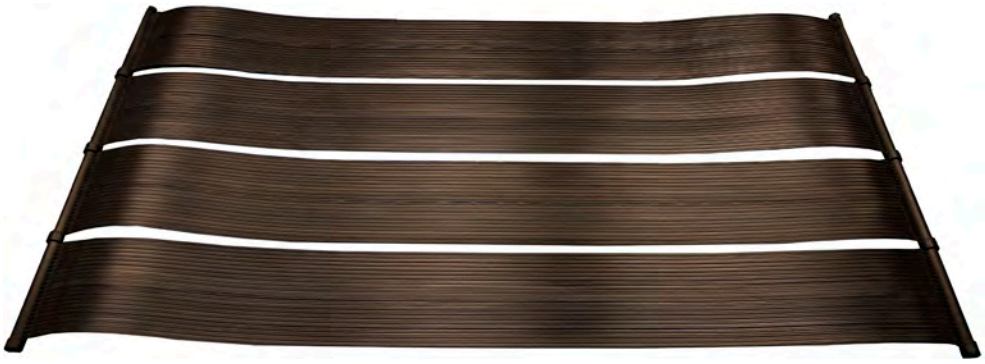
	HORES10SP1	ES10SP-1	10' Solar Panel (10' Long x 60" Wide)
◆	HORES20SP1	ES20SP-1	20' Solar Panel (20' Long x 30" Wide)
◆	HORESDK1	ESDK-1	Optional Diverter Valve Kit
CALL	HORESRMK1	ESRMK-1	Optional Roof Mounting Kit
◆	HORESIAK1	ESIAK-1	Option Intex Adapter Kit

All items cataloged are normally stocked unless noted.

Not Stocked ✻ While Supplies Last

Code	New Product Number	Old Product Number	Description
			Solar Pool Heat
			Above Ground For instructions on building a rack for AG Pool Panels go to: http://www.qualitypool.com/catalog-files/FAFCO-RackInstructions.pdf
✻	FAF961	FAF961	Panel Add-on Pack for Sun Saver
✻	FAF966	FAF966	By-Pass Valve Kit
✻	FAF963	FAF963	Roof/Rack Mounting Kit
			Inground Packs
✻	FAF153E	FAF153E	SunSaver System Pack (each system requires one) - 4 CPVC Female Adapters - 5 Tie-Down Caps - 5-Tie-Down Bases - 4 Clamps - 4 Couplers; Long; 5" - 1 Dacron Strap, 32" - 1 Vinyl Strap, 32"
✻	FAF150E	FAF150E	SunSaver Panel Pack (one required for each additional panel needed) - 5 Tie-Down Caps - 5-Tie-Down Bases - 4 Clamps - 2 Couplers; short; 3½" - 1 Dacron Panel Strap, 62" - 1 Vinyl Strap, 32"
			Accessories (For Above & Inground)
✻	FAF187	FAF187	Vacuum Relief Valve for AG Systems
✻	FAF05381	FAF05381	Female CPVC Adapter
	GAM4555	GAM4555	Bypass Kit - Includes: valve, tee, pressure gauge, (3) barbed clamp connectors, (1) 60" flex hose, (2) 1½" ID/2" OD Adapters, and (6) hose clamps.

All items cataloged are normally stocked unless noted.
◆ Not Stocked ✻ While Supplies Last

QUALITY POOL SUPPLY

Code	New Product Number	Old Product Number	Description

1919-2019 BOWMAN®
100 YEARS OF HEAT TRANSFER TECHNOLOGY

For complete details on Heat Exchangers and the Heat Swapper, go to ***www.heatswapper.com***

TUBE-IN-SHELL • LIQUID TO LIQUID

HEAT EXCHANGER

316L Stainless or Titanium Tube Stacks

		316L Stainless Steel Heat Exchanger	
	EJBEC10051022S	170SS	170,000 BTU
	EJBEC12051023S	270SS	270,000 BTU
		Titanium Heat Exchanger	
	EJBEC10051022T	170Ti	170,000 BTU
	EJBEC12051023T	270Ti	270,000 BTU

TYPICAL APPLICATIONS

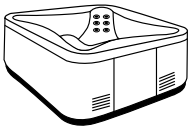

SPA / HOT TUB

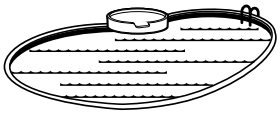

SWIMMING POOLS

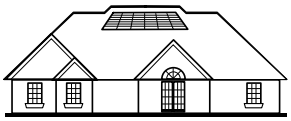

SOLAR

HEAT RECOVERY

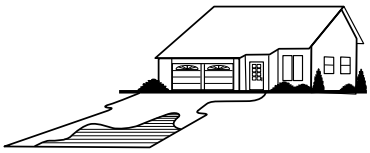

DRIVEWAY & SIDEWALK SNOWMELT

All items cataloged are normally stocked unless noted.

Not Stocked ✻ While Supplies Last

Code	New Product Number	Old Product Number	Description

1919-2019 BOWMAN® 100 YEARS OF HEAT TRANSFER TECHNOLOGY

www.heatswapper.com

THE HEAT SWAPPER™

Complete "Plug-In" Heating System

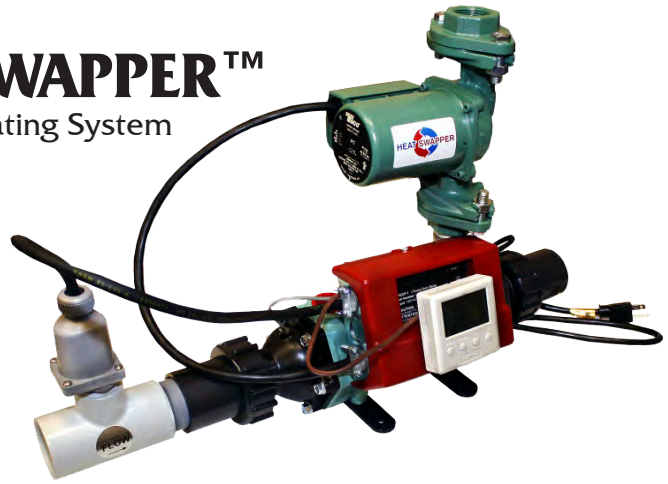

		With Cast Iron Pump	
	HSW62C2SS	HS62C-2SS	170,000 BTU, 316L Stainless Tube Stack
	HSW62C3SS	HS62C-3SS	270,000 BTU, 316L Stainless Tube Stack
	HSW62C2TI	HS62C-2Ti	170,000 BTU, Titanium Tube Stack
	HSW62C3TI	HS62C-3Ti	270,000 BTU, Titanium Tube Stack
		With Stainless Steel Pump	
	HSW62S2SS	HS62S-2SS	170,000 BTU, 316L Stainless Tube Stack
	HSW62S3SS	HS62S-3SS	270,000 BTU, 316L Stainless Tube Stack
	HSW62S2TI	HS62S-2Ti	170,000 BTU, Titanium Tube Stack
	HSW62S3TI	HS62S-3Ti	270,000 BTU, Titanium Tube Stack
		Without Pump	
	HSW62LP2SS	HS62LP-2SS	170,000 BTU, 316L Stainless Tube Stack
	HSW62LP3SS	HS62LP-3SS	270,000 BTU, 316L Stainless Tube Stack
	HSW62LP2TI	HS62LP-2Ti	170,000 BTU, Titanium Tube Stack
	HSW62LP3TI	HS62LP-3Ti	270,000 BTU, Titanium Tube Stack

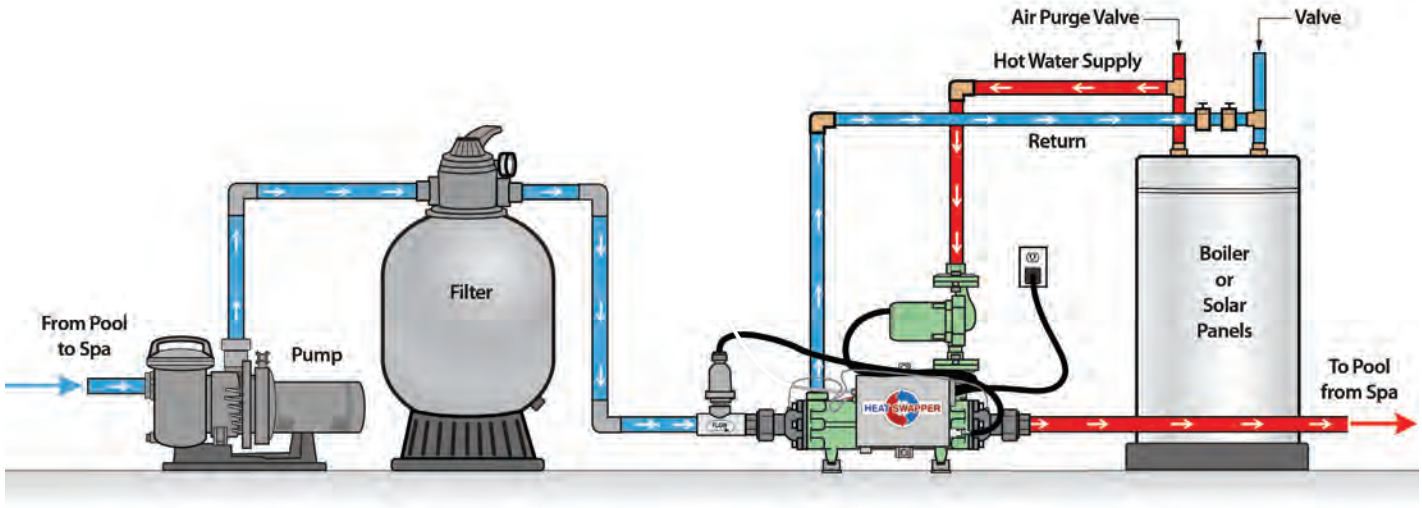

All items cataloged are normally stocked unless noted.
◆ Not Stocked ✻ While Supplies Last

QUALITY POOL SUPPLY

Raypak® A Rheem® Company

2005 — Current

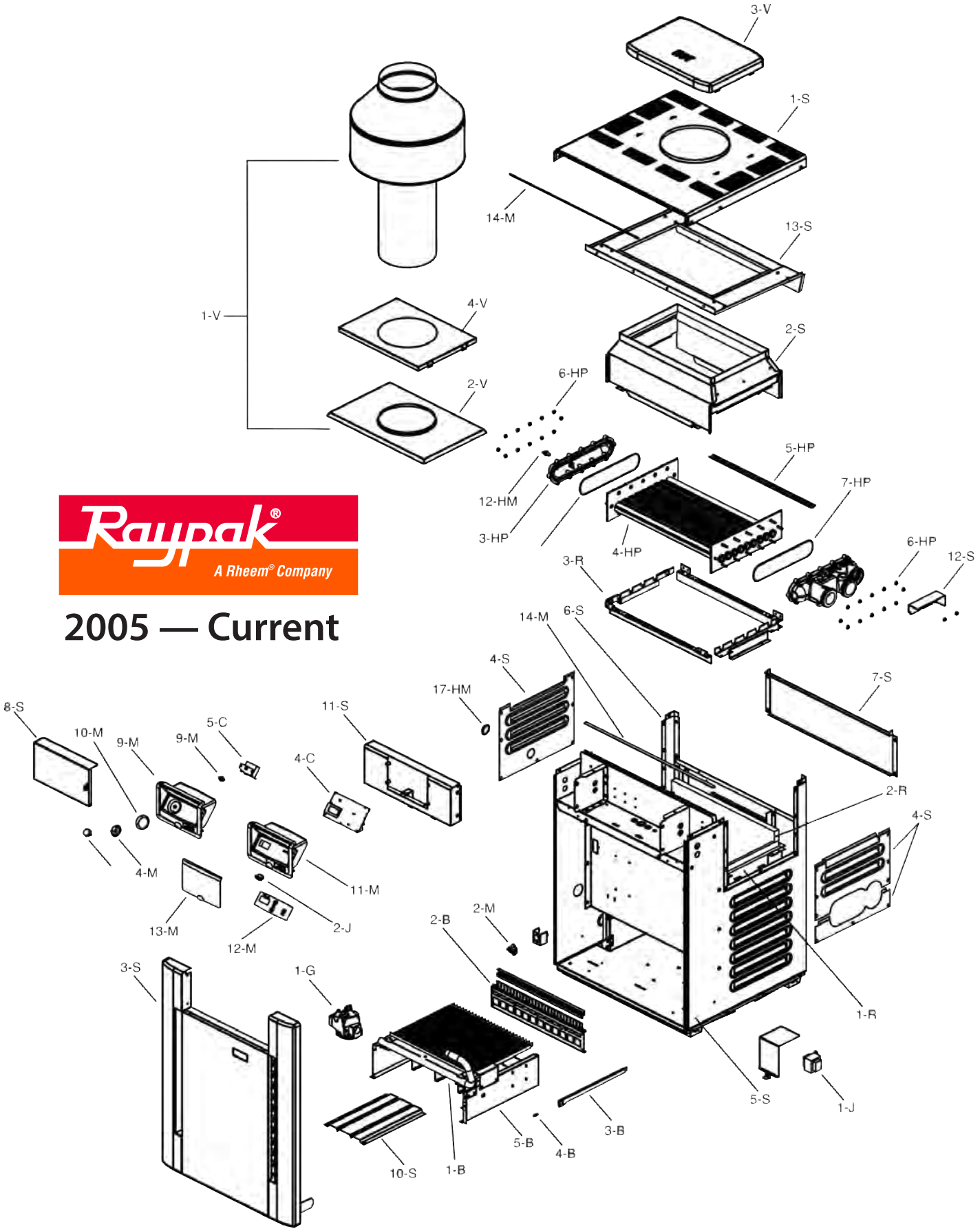

All items cataloged are normally stocked unless noted.

Not Stocked ✻ While Supplies Last

Code	New Product Number	Old Product Number	Description	
	RAY006725F	RAY006725F	1-C	Thermostat Auto Reset 135 Deg Surface Mount Hi Limit
	RAY600892B	RAY600892B	2-C	AGS 135° (Auto Gas Shut-Off) - Red Epoxy Hi Limit
	RAY600893B	RAY600893B	3-C	High Limit 140° - Black Epoxy
	RAY013464F	RAY013464F	4-C	P. C. Board/Control IID Units
	RAY003346F	RAY003346F	5-C	Thermostat Control MV Units Mechanical
	RAY009577F	RAY009577F	6-C	Temperature Sensor IID Units
	RAY003898F	RAY003898F	1-G	Combination Valve - Nat. MV
	RAY003899F	RAY003899F		Combination Valve - Pro. MV
	RAY003900F	RAY003900F		Combination Valve - Nat. IID
	RAY004306F	RAY004306F		Combination Valve - Pro. IID
	RAY006706F	RAY006706F		Inlet/Outlet Header (Includes 6-HP)
	RAY006707F	RAY006707F	3-HP	Return Header (Includes 6-HP)
	RAY010059F	RAY010059F	4-HP	Tube Bundle Copper ** 206A
	RAY010060F	RAY010060F	4-HP	Tube Bundle Copper ** 266A
	RAY010061F	RAY010061F	4-HP	Tube Bundle Copper ** 336A
	RAY010062F	RAY010062F	4-HP	Tube Bundle Copper ** 406A
	RAY010364F	RAY010364F		Tube Bundle Cupro Nickel ** 206A (Prior to 7/2013)
	RAY010365F	RAY010365F		Tube Bundle Cupro Nickel ** 266A (Prior to 7/2013)
	RAY010366F	RAY010366F		Tube Bundle Cupro Nickel ** 336A (Prior to 7/2013)
	RAY010367F	RAY010367F		Tube Bundle Cupro Nickel ** 406A (Prior to 7/2013)
◆	RAY014930F	RAY014930F		Tube Bundle Kit Cupro Nickel ** 206A (After 7/2013)
◆	RAY014931F	RAY014931F		Tube Bundle Kit Cupro Nickel ** 266A (After 7/2013)
◆	RAY014932F	RAY014932F		Tube Bundle Kit Cupro Nickel ** 336A (After 7/2013)
◆	RAY014933F	RAY014933F		Tube Bundle Kit Cupro Nickel ** 406A (After 7/2013)
	RAY006713F	RAY006713F	7-HP	O-ring Gasket (2)
	RAY006714F	RAY006714F	8-HP	Sensor Adapter Digital Electronic
	RAY006805F	RAY006805F		Sensor Well Millivolt
	RAY006715F	RAY006715F	9-HP	Bypass Kit
	RAY006716F	RAY006716F	10-HP	Bypass Valve
	RAY006718F	RAY006718F	12-HP	Bypass Spring (All Sizes Included)
	RAY006719F	RAY006719F	13-HP	Unitherm Governor
	RAY006720F	RAY006720F	14-HP	Unitherm Governor Plug
	RAY006721F	RAY006721F	15-HP	Drain Plug
	RAY006826F	RAY006826F	16-HP	Baffle Plastic HDR Kit
	RAY006723F	RAY006723F	17-HP	2" PVC Connector & Nut (2)
	RAY006724F	RAY006724F	18-HP	O-ring - Bag of 4 rings
	RAY003766F	RAY003766F	15-HM	Inlet & Outlet Flange
	RAY062236B	RAY062236B	16-HM	Flange Gasket 1½" Connections
	RAY800080B	RAY800080B		Flange Gasket 2" Connections
	RAY800014B	RAY800014B	7-HM	Header Gasket (9)
	RAY062234B	RAY062234B	8-HM	Unitherm Governor
❋	RAY850252	RAY850252	11-HM	Bypass Spring 206A
❋	RAY850253	RAY850253	11-HM	Bypass Spring 266A
	RAY013793F	RAY013793F	12-HM	Drain Valve
	RAY003765F	RAY003765F	13-HM	Sensor Well
	RAY005264F	RAY005264F	17-HM	Rear Drain Plug & Cover
	RAY006736F	RAY006736F	1-J	Transformer 120/240/24V
	RAY006886F	RAY006886F	4-M	Knobstop
	RAY005899F	RAY005899F	5-M	Thermal Fuse
	RAY009492F	RAY009492F	12-M	Switch/Decal-Membrane
	RAY600525B	RAY600525B	1-P	Pilot Nat. MV
	RAY600575B	RAY600575B		Pilot Pro. MV
	RAY002003F	RAY002003F	2-P	Pilot Nat & Pro IID
	RAY003902F	RAY003902F		Pilot Orifice Pro. MV
	RAY003903F	RAY003903F	4-P	Pilot Orifice Nat. IID .020
	RAY004308F	RAY004308F		Pilot Orifice Pro. IID .012
	RAY600019B	RAY600019B	5-P	Pilot Generator MV
	RAY306692	RAY306692	7-P	Pilot Mounting Bracket IID
	RAY004078F	RAY004078F	9-P	Pilot Tube

All items cataloged are normally stocked unless noted.

◆ Not Stocked ❋ While Supplies Last

QUALITY POOL SUPPLY

Raypak® A Rheem® Company

106A & 156A

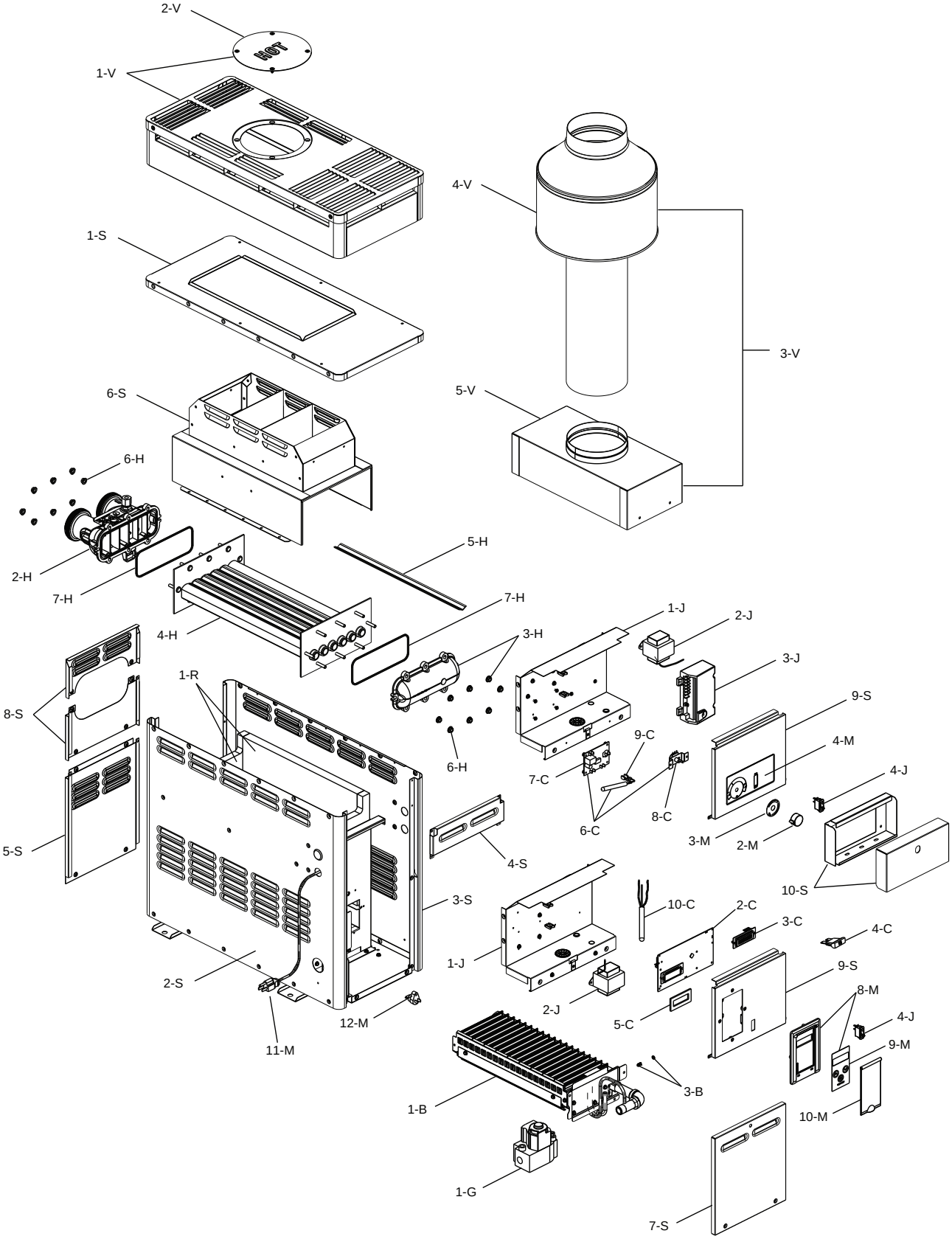

All items cataloged are normally stocked unless noted.

Not Stocked ✻ While Supplies Last

Raypak® A Rheem® Company

106A & 156A

Code	New Product Number	Old Product Number	Model Number 106	Model Number 156		Description
◆	RAY014841F	RAY014841F	X		1-B	Tray/Man 106A Nat1.30Mm-Kit
◆	RAY014842F	RAY014842F		X	1-B	Tray/Man 156A Nat1.30Mm-Kit
◆	RAY014845F	RAY014845F	X		1-B	Tray/Man 106A Pro.84Mm-Kit
◆	RAY014846F	RAY014846F		X	1-B	Tray/Man 156A Pro.84Mm-Kit
	RAY013464F	RAY013464F		X	2-C	Pc Board Controller106A-405B 206A-408 3 Wire-Kit
◆	RAY011585F	RAY011585F	X		6-C	Thermostat Pool-Kit
◆	RAY014923F	RAY014923F	X		7-C	Pc Board Pool Iid106A-Kit
◆	RAY011586F	RAY011586F	X		8-C	Potentiometer Tempcontrol-Kit
◆	RAY011587F	RAY011587F	X		9-C	Temp Sensorelectronic Two Wire-Kit
	RAY009577F	RAY009577F		X	10-C	Temperature Sensoriid Three Wire-Kit
◆	RAY014867F	RAY014867F	X	X	1-G	Gas Valve Nat106A-156A-Kit
◆	RAY014868F	RAY014868F	X	X	1-G	Gas Valve Pro106A-156A-Kit
◆	RAY011595F	RAY011595F	X	X	2-H	Hdr In/Out Polymer130 106A-156A-Kit
◆	RAY011596F	RAY011596F	X	X	3-H	Hdr Return Polymer130 106A-156A-Kit
◆	RAY014874F	RAY014874F	X		4-H	Tube Bundle 106Apolymer-Kit
	RAY014875F	RAY014875F		X	4-H	Tube Bundle 156Apolymer-Kit
	RAY011600F	RAY011600F	X	X	7-H	O Ring Gasket (2)130 106A-156A-Kit
	RAY009493F	RAY009493F	X	X	4-J	Rocker Switch Spst-Kit
◆	RAY009499F	RAY009499F	X	X	2-M	Control Knob Mv-Kit
	RAY005899F	RAY005899F	X	X	12-M	Thermal Cut-Off Fuse-Kit
◆	RAY014890F	RAY014890F	X		1-R	Ref Block 106A-Kit
◆	RAY014891F	RAY014891F		X	1-R	Ref Block 156A-Kit
	RAY014357	RAY014357	X		3-V	Indoor Draft Hood 106
	RAY014358	RAY014358		X	3-V	Indoor Draft Hood 156
◆	RAY014914F	RAY014914F	X			Convert Nat To Pro106A Cu-Kit
◆	RAY014915F	RAY014915F		X		Convert Nat To Pro156A Cu-Kit
◆	RAY014918F	RAY014918F	X			Convert Pro To Nat106A Cu-Kit
◆	RAY014919F	RAY014919F		X		Convert Pro To Nat156A Cu-Kit

All items cataloged are normally stocked unless noted.
◆ Not Stocked ✻ While Supplies Last

QUALITY POOL SUPPLY

Raypak® A Rheem® Company

106A & 156A

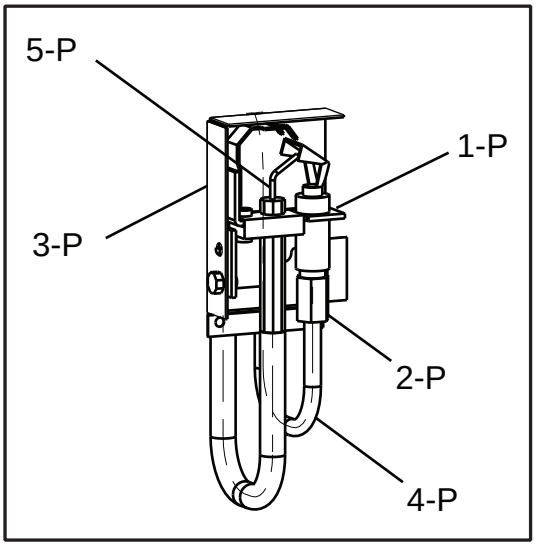

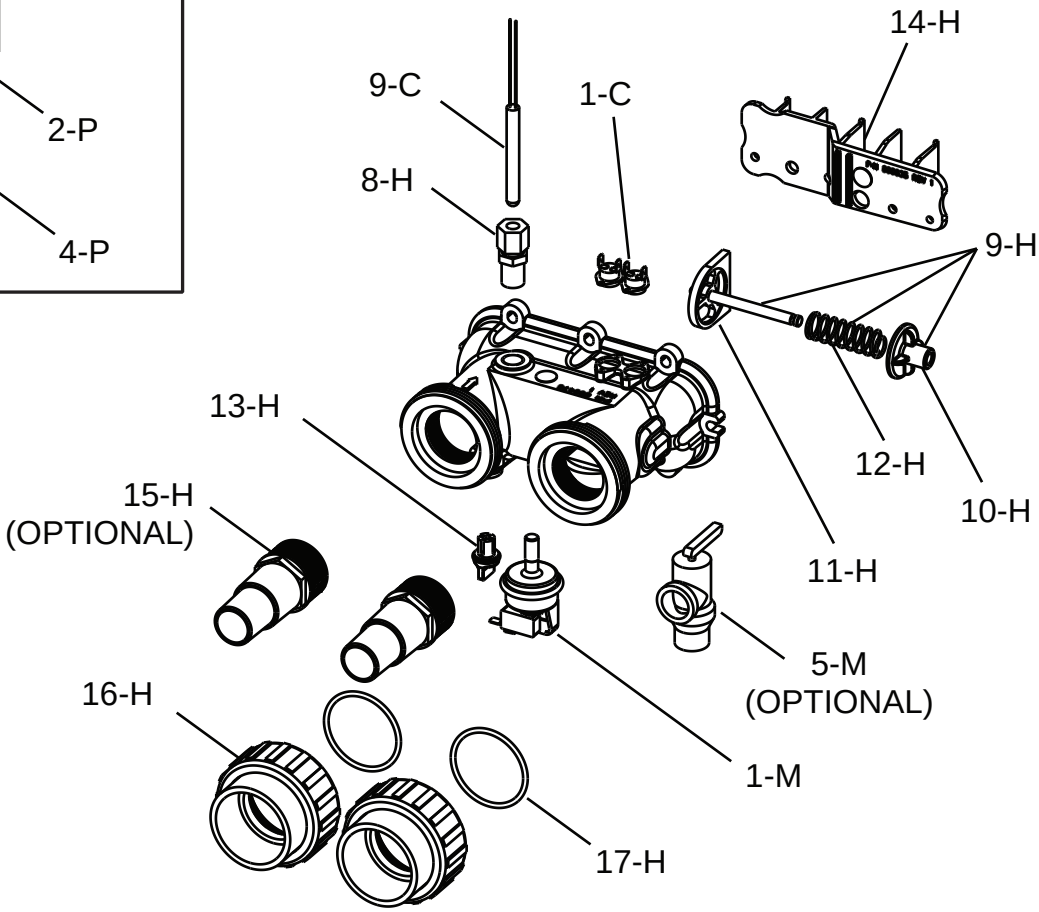

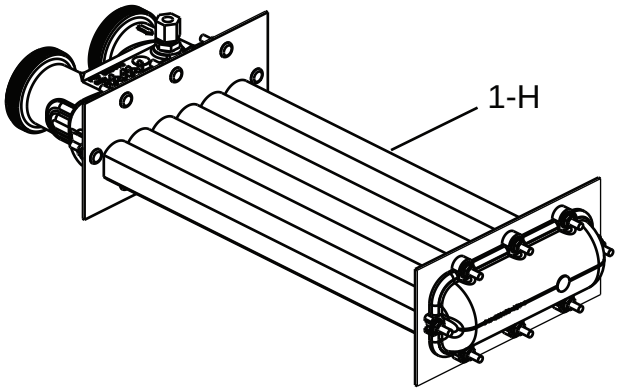

All items cataloged are normally stocked unless noted.

Not Stocked ✻ While Supplies Last

Raypak® A Rheem® Company

106A & 156A

Code	New Product Number	Old Product Number	Model Number 106	Model Number 156		Description
	RAY006725F	RAY006725F	X	X	1-C	High Limit 135F Auto Reset Surface Mtg-Kit
◆	RAY014869F	RAY014869F	X		1-H	Ht Ex 106A Polymer-Kit
◆	RAY014870F	RAY014870F		X	1-H	Ht Ex 156A Polymer-Kit
	RAY006714F	RAY006714F	X	X	8-H	Sensor Adapter Pool-Kit
	RAY006716F	RAY006716F	X	X	10-H	Bypass Valve Pool-Kit
◆	RAY006717F	RAY006717F	X	X	11-H	Bypass Dam/Shaft-Kit
◆	RAY011602F	RAY011602F	X	X	12-H	Bypass Spring106A-156A-Kit
	RAY006721F	RAY006721F	X	X	13-H	Drain Plug Pool-Kit
◆	RAY014882F	RAY014882F	X	X	14-H	Inlet/Outlet Headerdam 106A-156A-Kit
	RAY006723F	RAY006723F	X	X	16-H	Connector & Nut Cpvc2" (2)-Kit
	RAY006724F	RAY006724F	X	X	17-H	O-ring Inlet/Outletpool-Kit
	RAY006737F	RAY006737F	X	X	1-M	Pressure Switch 1.75Psi-Kit
	RAY002003F	RAY002003F	X	X	1-P	Pilot E10 Nat/Pro053-408-Kit
	RAY003903F	RAY003903F	X	X	2-P	Pilot Orifice Natiid-Kit
	RAY004308F	RAY004308F	X	X	2-P	Pilot Orifice Proiid-Kit
◆	RAY014889F	RAY014889F	X	X	3-P	Pilot Brkt 106A-156A-Kit
	RAY004078F	RAY004078F	X	X	4-P	Pilot Tube 34"-Kit

All items cataloged are normally stocked unless noted.
◆ Not Stocked ✻ While Supplies Last

QUALITY POOL SUPPLY

Raypak A Rheem® Company

QUICK REFERENCE GUIDE

RP2100 PARTS LIST

		RAYPAK RP2100 "CAST IRON/ASME" MODELS 11-01-98 THRU 10-01-04					RAYPAK RP2100 "POLYMER" MODELS MANUFACTURED 11-01-98 THRU 10-01-04			
DESCRIPTION		***C-R185A***	***C-R265A***	***C-R335A***	***C-R405A***		***P-R185A***	***P-R265A***	***P-R335A***	***P-R405A***
BYPASS VALVE		062235B	062235B	062235B	062235B		006715F	006715F	006715F	006715F
DRAIN VALVE		013793F	013793F	013793F	013793F		006721F	006721F	006721F	006721F
REAR DRAIN PLUG		005264F	005264F	005264F	005264F		006721F	006721F	006721F	006721F
FLANGES / UNION		003766F	003766F	003766F	003766F		006723F	006723F	006723F	006723F
O-RINGS/GASKET		**062236B 1 1/2"**					006724F	006724F	006724F	006724F
		800080B 2"								
GAS VALVES	#003898F	FOR ALL NAT. GAS MILLIVOLT					#003900F	FOR ALL NAT. GAS I.I.D.		
	#003899F	FOR ALL L.P. GAS MILLIVOLT					#004306F	FOR ALL L P. GAS I.I.D.		
HEADER " REAR "		006731F	006731F	006731F	006731F		006707F	006707F	006707F	006707F
IN/0UT HEADER		006730F	006730F	006730F	006730F		006827F	006827F	006827F	006827F
" GASKETS / O RINGS		800014B	800014B	800014B	800014B		006713F	006713F	006713F	006713F
UNITHERM GOVERNOR		062234B	062234B	062234B	062234B		006719F	006719F	006719F	006719F
TUBE BUNDLES		006732F	006733F	006734F	006735F		006708F	006709F	006710F	006711F
TUBE BUNDLE CUPRO		**010859F**	**010369F**	**010860F**	**010861F**		**009878F**	**010365F**	**009880F**	**009881F**
HEAT EX COMPLETE		006726F	006727F	006728F	006729F		006702F	006703F	006704F	006705F
HI-LIMITS 135*		600892B	600892B	600892B	600892B		006725F	006725F	006725F	006725F
HI-LIMITS 140*		600893B	600893B	600893B	600893B		N.A.	N.A.	N.A.	N.A.
PILOT GENERATOR		600019B	600019B	600019B	600019B		600019B	600019B	600019B	600019B
PILOT ASSY MV/NAT		600525B	600525B	600525B	600525B		600525B	600525B	600525B	600525B
PILOT ASSY MV/PRO		600575B	600575B	600575B	600575B		600575B	600575B	600575B	600575B
PILOT ASSY (IID) NAT/PRO		002003F	002003F	002003F	002003F		002003F	002003F	002003F	002003F
IGNITION CONTROL		**#004817B FOR ALL IID/NAT #004818B FOR ALL IID/PRO**								
ROCKER SWITCH		009493F	009493F	009493F	009493F		006872F	006872F	006872F	006872F
PRESSURE SWITCH		006737F	006737F	006737F	006737F		006737F	006737F	006737F	006737F
ROLL OUT SENSOR		005899F	005899F	005899F	005899F		005899F	005899F	005899F	005899F
MECHANICAL T-STAT		003346F	003346F	003346F	003346F		003346F	003346F	003346F	003346F
PC BOARD (IID)		**010253F**	**010253F**	**010253F**	**010253F**		**010253F**	**010253F**	**010253F**	**010253F**
		NOTE: INCLUDES BUILT IN IGNITION CONTROL AND 3 WIRE TEMP SENSOR # 009577F								
CONTROL BEZEL (IID)		006739F	006739F	006739F	006739F		006739F	006739F	006739F	006739F
KEYPAD DECAL (IID)		009184F	009184F	009184F	009184F		009184F	009184F	009814F	009814F
CONTROL BEZEL (MV)		005291F	005291F	005291F	005291F		005291F	005291F	005291F	005291F
		*******FOR HEATERS BUILT 11-01-03 THRU 10-01-04 SEE BELOW*******								
CONTROL BEZEL (IID)		009491F	009491F	009491F	009491F		009491F	009491F	009491F	009491F
KEYPAD DECAL (IID)		009492F	009492F	009492F	009492F		009492F	009492F	009492F	009492F
CONTROL BEZEL (MV)		009489F	009489F	009489F	009489F		009489F	009489F	009489F	009489F
TEMP SENSOR (IID)		006701F	006701F	006701F	006701F		006701F	006701F	006701F	006701F
		NOTE: 006701F IS OLD STYLE 2 WIRE TEMP SENSOR								
SENSOR WELL		003765F	003765F	003765F	003765F	**M.V.**	006805F	006805F	006805F	006805F
SENSOR ADAPTER F/ I.I.D with CAPRON HEADER						**I.I.D.**	006714F	006714F	006714F	006714F
TRANSFORMER		006736F	006736F	006736F	006736F		006736F	006736F	006736F	006736F
CONVERSION KITS										
NAT. to L. P. Millivolt		004690B	004690B	004692B	004692B		004690B	004690B	004692B	004692B
L. P. to NAT Millivolt		005319F	005319F	005320F	005320F		005319F	005319F	005320F	005320F

All items cataloged are normally stocked unless noted.

Not Stocked ✻ While Supplies Last

Raypak® A Rheem® Company

QUICK REFERENCE GUIDE

RAYPAK DIGITAL PARTS LIST

		RAYPAK DIGITAL "CAST IRON/ASME" MODELS 11-01-04 THRU CURRENT					RAYPAK DIGITAL "POLYMER" MODELS 11-01-04 THRU CURRENT			
DESCRIPTION		***C-R206***	***C-R266***	***C-R336***	***C-R406***		***P-R206***	***P-R266***	***P-R336***	***P-R406***
BYPASS VALVE		062235B	062235B	062235B	062235B		006715F	006715F	006715F	006715F
DRAIN VALVE		013793F	013793F	013793F	013793F		006721F	006721F	006721F	006721F
REAR DRAIN PLUG		005264F	005264F	005264F	005264F		006721F	006721F	006721F	006721F
FLANGES / UNION		003766F	003766F	003766F	003766F		006723F	006723F	006723F	006723F
" GASKETS / O RINGS		062236B	062236B	062236B	062236B		006724F	006724F	006724F	006724F
GAS VALVES	#003898F	FOR ALL NAT. GAS MILLIVOLT					#003900F	FOR ALL NAT. GAS I.I.D.		
	#003899F	FOR ALL L.P. GAS MILLIVOLT					#004306F	FOR ALL L P. GAS I.I.D.		
HEADER " REAR "		006731F	006731F	006731F	006731F		006707F	006707F	006707F	006707F
IN/0UT HEADER		006730F	006730F	006730F	006730F		006827F	006827F	006827F	006827F
" GASKETS / O RINGS		800014B	800014B	800014B	800014B		006713F	006713F	006713F	006713F
UNITHERM GOVERNOR		062234B	062234B	062234B	062234B		006719F	006719F	006719F	006719F
TUBE BUNDLES		010055F	006733F	010057F	010058F		010059F	010060F	010061F	010062F
TUBE BUNDLE CUPRO		**010368F**	**010369F**	**010370F**	**010371F**		**010364F**	**010365F**	**010366F**	**010367F**
HEAT EX COMPLETE		010051F	006727F	010053F	010054F		010043F	010044F	010045F	010046F
HT EX COMPLETE CUPRO		**010360F**	**010361F**	**010362F**	**010363F**		**010356F**	**010357F**	**010358F**	**010359F**
HI-LIMITS 135*		600892B	600892B	600892B	600892B		006725F	006725F	006725F	006725F
HI-LIMITS 140*		600893B	600893B	600893B	600893B		N.A.	N.A.	N.A.	N.A.
PILOT GENERATOR		600019B	600019B	600019B	600019B		600019B	600019B	600019B	600019B
PILOT ASSY MV/NAT		600525B	600525B	600525B	600525B		600525B	600525B	600525B	600525B
PILOT ASSY MV/PRO		600575B	600575B	600575B	600575B		600575B	600575B	600575B	600575B
PILOT ASSY IID/NAT		002003F	002003F	002003F	002003F		002003F	002003F	002003F	002003F
PILOT ASSY IID/PRO		002003F	002003F	002003F	002003F		002003F	002003F	002003F	002003F
ROCKER SWITCH		009493F	009493F	009493F	009493F		009493F	009493F	009493F	009493F
PRESSURE SWITCH		006737F	006737F	006737F	006737F		006737F	006737F	006737F	006737F
ROLL OUT SENSOR		005899F	005899F	005899F	005899F		005899F	005899F	005899F	005899F
MECHANICAL T-STAT		003346F	003346F	003346F	003346F		003346F	003346F	003346F	003346F
PC BOARD (IID)		010253F	010253F	010253F	010253F		010253F	010253F	010253F	010253F
CONTROL BEZEL IID		009491F	009491F	009491F	009491F		009491F	009491F	009491F	009491F
KEYPAD DECAL (IID)		009492F	009492F	009492F	009492F		009492F	009492F	009492F	009492F
CONTROL BEZEL (MV)		009489F	009489F	009489F	009489F		009489F	009489F	009489F	009489F
DIAL DECAL (MV)		009858F	009858F	009858F	009858F		009858F	009858F	009858F	009858F
TEMP SENSOR (IID)		009577F	009577F	009577F	009577F		009577F	009577F	009577F	009577F
SENSOR WELL		003765F	003765F	003765F	003765F	**M.V.**	006805F	006805F	006805F	006805F
SENSOR ADAPTER F/ I.I.D with CAPRON HEADER						**I.I.D.**	006714F	006714F	006714F	006714F
TRANSFORMER		006736F	006736F	006736F	006736F		006736F	006736F	006736F	006736F
CONVERSION KITS										
NAT. to L. P. Millivolt		004690B	004690B	004692B	004692B		004690B	004690B	004692B	004692B
L. P. to NAT Millivolt		010419F	010419F	010420F	010420F		010419F	010419F	010420F	010420F

All items cataloged are normally stocked unless noted.

◆ Not Stocked ✻ While Supplies Last

QUALITY POOL SUPPLY

Raypak® A Rheem® Company

QUICK REFERENCE GUIDE

DESCRIPTION	RAYPAK VERSA SERIES HEATERS 055,105,155					RAYPAK 130 HEATER MANUFACTURED 10-30-05 THRU CURRENT		
	RAYPAK SERVICE 1-800-947-2975							
	B55B	**105A**	**105B**	**155B/C**			**130**	
BYPASS VALVE	306079	062235B	062235B	062235B			011601F	
HEAVY SPRING	N.A.	850253	N.A.	850253			011602F	
DRAIN VALVE	013793F	013793F	N.A.	013793F			006721F	
FLANGES	002432F	004056F	N.A.	003766F			006723F	OPTIONAL
FLANGE GASKETS	800013B	800013B	N.A.	062236B			006724F	OPTIONAL
GAS VALVES	#003898F FOR ALL NAT. GAS MILLIVOLT					011588F NAT/MV		011589F PRO/MV
	#003899F FOR ALL L. P. GAS MILLIVOLT					011590F NAT/DSI		011591F PRO/DSI
TUBE BUNDLES	004695F	004903F	006889F	004896F			011597F	
HEADER (RETURN)	N.A.	004934F	N.A.	004964F			011596F	
HEADER (IN/OUT)	N.A.	004933F	006887F	004963F			011594F	
HEADER GASKETS	N.A.	800014B	N.A.	800086B			011600F	
CUPRO TUBE BUNDLE							**011598F**	
HI-LIMITS 135*	600889B	600892B	006725F	600892B			006725F	
HI-LIMITS 140*	600890B	600893B	N.A.	600893B			N.A.	
HI-TENSION WIRE	002654B	002654B	N.A.	002654B			011612F	
IGNITION CONTROL "SPARK BOX"		004817B NAT GAS					011606F	**DSI**
		004818B PRO GAS					011606F	**DSI**
ON/OFF SWITCH	650761	650761	006872F	650761			009493F	
PILOT GENERATOR	600019B	ALL MILLIVOLT					600019B	
PILOT ASSEMBLY	600525B	MILLIVOLT/NAT GAS					600525B	
PILOT ASSEMBLY	600575B	MILLIVOLT/PRO GAS					600575B	
PILOT ASSEMBLY	002003F	IID/ PRO and NAT GAS				**011611F IGNITOR DSI--NAT/PRO**		
PRESSURE SWITCH	062237B	062237B	006737F	062237B			006737F	
THERMOSTATS								
MECHANICAL	003346F	003346F	003346F	003346F	**MV**		003346F	
I.I.D. THERMOSTAT	005390F	005390F	005390F	005390F	**IID**		011585F	
SENSOR WELL	350336	003765F	003765F	003765F	**MV**		006805F	
ROLL OUT SENSOR	008126F	008126F	008126F	005899F			005899F	
TRANSFORMER	006736F	006736F	006736F	006736F			011605F	
UNITHERM GOVERNOR	600885	N.A.	N.A.	062234B			N.A.	
U/G SPRING	850247	N.A.	N.A.	N.A.			N.A.	
U/G CAP	400734	N.A.	N.A.	N.A.			N.A.	
CONVERSION KITS								
NAT. to L. P. Millivolt	004696B	004915B	004915B	004690B			011633F	
L. P. to NAT Millivolt	004697B	004916B	004916B	004691F			011634F	

All items cataloged are normally stocked unless noted.

Not Stocked ✻ While Supplies Last

Code	New Product Number	Old Product Number	Description

Raypak PC Board Changes

Raypak's previous replacement PC Board kit (part number 010253F) was designed to be backward compatible with all digital pool heaters going back to the models R185A to R405A through current production of all digital pool heaters.

This kit not only contained the PC board but also included a weather shield, temp sensor, hi tension wire assembly and mounting screws. These additional items are only needed when changing the PC board on older R185A, R265A, R335A and R405A model pool heaters. The dates of manufacture of these units were from 11/1/98 thru 10/19/03.

Raypak is always looking for ways to reduce the cost of its products to help our customers and, as a result, we have developed a new PC Board kit (part number 013489F) that will only contain the PC Board and hardware required for the change out. This new board kit will be used on the majority of pool heaters currently in service and, since this new board kit will not contain the additional items mentioned above, the cost of the new replacement board will be less expensive.

	RAY013464F	RAY013464F	Kit PC Board Controller R185B-407A **For these models manufactured 10-20-03 thru 10-21-04** R185B, R265B, R335B, R405B **For these models manufactured 10-22-04 thru Current** 206A, 266A, 336A, 406A, 207A, 267A, 337A, 407A

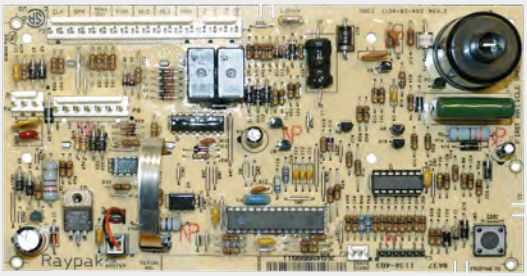

013464F

QUALITY POOL SUPPLY

Raypak® A Rheem® Company

2100 Series

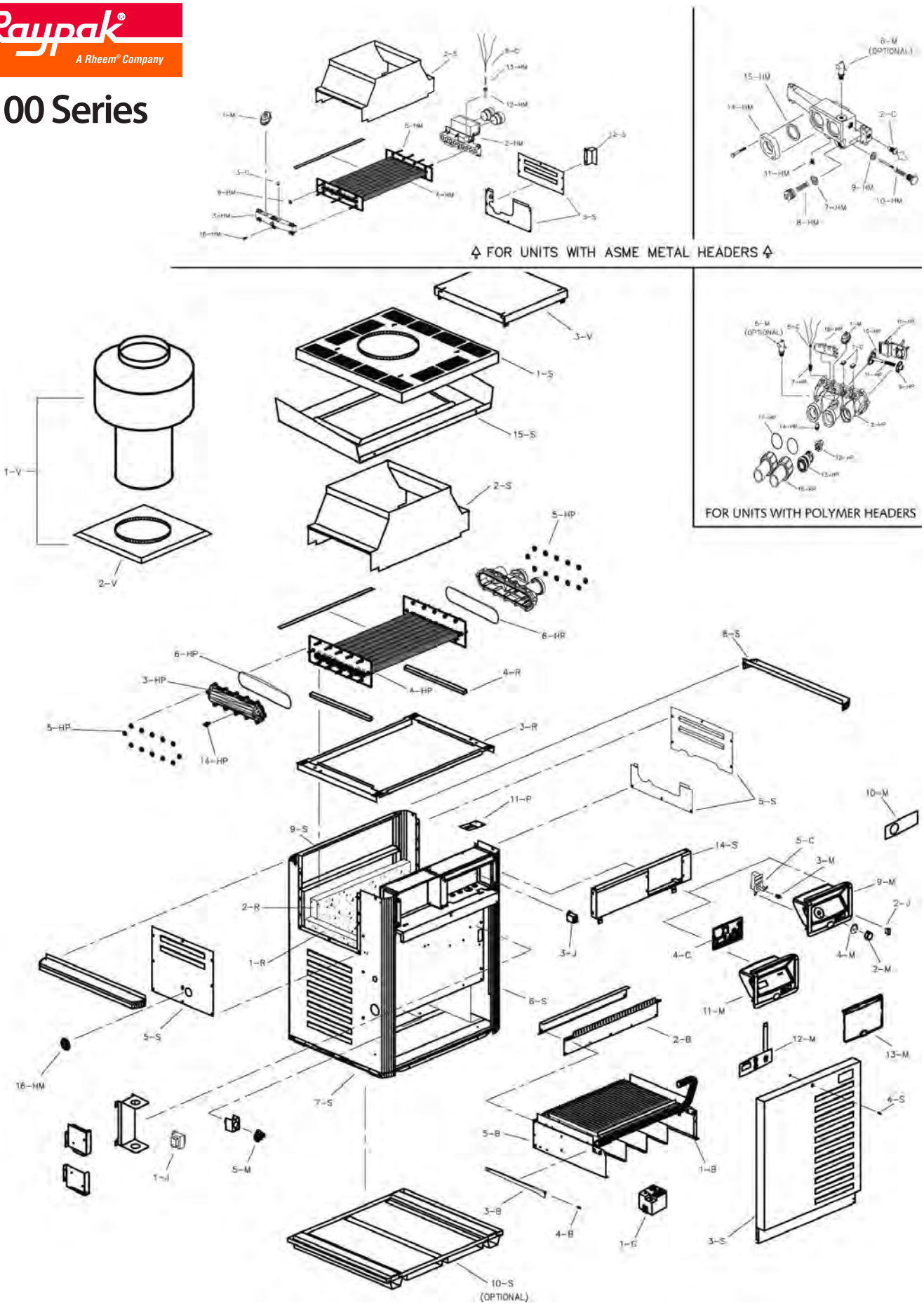

All items cataloged are normally stocked unless noted.

Not Stocked ✻ While Supplies Last

RP2100 Electronic Series Parts

Code	New Product Number	Old Product Number	Description
	RAY005899F	RAY005899F	Thermal Fuse Kit
	RAY002654B	RAY002654B	Hi Tension Wire
	RAY006872F	RAY006872F	Rocker Switch Kit
	RAY003900F	RAY003900F	Gas Valve, Natural
	RAY004306F	RAY004306F	Gas Valve, Propane
	RAY004817B	RAY004817B	Ignition Control, Natural
	RAY004818B	RAY004818B	Ignition Control, Propane
	RAY006736F	RAY006736F	Transformer for Capron Heaters
	RAY800304	RAY800304	Thermostat Shaft
	RAY002003F	RAY002003F	Electronic Pilot 185-405, Natural & Propane - Built After 6/1/00
	RAY008668F	RAY008668F	Electronic Pilot 185-405, Natural & Propane - Built Before 6/1/00
	RAY003903F	RAY003903F	Pilot Orifice, Natural
	RAY004308F	RAY004308F	Pilot Orifice, Propane
	RAY010071F	RAY010071F	Flue Collector 206A
	RAY010072F	RAY010072F	Flue Collector 266A
	RAY010073F	RAY010073F	Flue Collector 336A
	RAY010074F	RAY010074F	Flue Collector 406A
	RAY009577F	RAY009577F	Temperature Sensor
	RAY011600F	RAY011600F	O-ring Gasket (Set of 2) 130 Kit
	RAY007224F	RAY007224F	Pressure Valve Kit 125PSI
	RAY010059F	RAY010059F	Tube Bundle 206/207 Tube Bundles
	RAY010060F	RAY010060F	Tube Bundle 266/267 Tube Bundles
	RAY010061F	RAY010061F	Tube Bundle 336/337 Tube Bundles
	RAY010062F	RAY010062F	Tube Bundle 406/407 Tube Bundles
	RAY010364F	RAY010364F	Tube Bundle 206/207 Cupro (Tube Bundles only)
	RAY010365F	RAY010365F	Tube Bundle 265/266 Cupro (Tube Bundles only)
	RAY010366F	RAY010366F	Tube Bundle 336/337 Cupro (Tube Bundles only)
	RAY010367F	RAY010367F	Tube Bundle 406/407 Cupro (Tube Bundles only)
	RAY009184F	RAY009184F	Touch Pad / Switch / Decal Membrane White Background (For Older Models 185-405)
	RAY009492F	RAY009492F	Touch Pad / Switch / Decal Membrane Black Background (For 185B-405B & 206-407)

All items cataloged are normally stocked unless noted.
◆ Not Stocked ✻ While Supplies Last

QUALITY POOL SUPPLY

Raypak® A Rheem® Company

Heater Parts

3902

PG-36

RAY003898F

Code	New Product Number	Old Product Number	Description
	AEQ3902	3902	Pressure Switch (Aladdin)
	RAY062237B	RAY062237B	Pressure Switch (Raypak)
	RAY003272F	RAY003272F	Pressure Switch Tubing Kit 153A-405
	WHR3101	PG-36	Pilot Generator (Jade)
	RAY600019B	RAY600019B	Pilot Generator (Raypak)
	RAY004078F	RAY004078F	Pilot Tubing Kit
	RAY002432F	RAY002432F	Flange - Inlet/Outlet 155A/153/151
	RAY003766F	RAY003766F	Flange Kit - Inlet/Outlet 185A-405B 1½" or 2"
	RAY062236B	RAY062236B	Flange Gasket 1½" Connections Versa 185A-405B
	RAY800080B	RAY800080B	Flange Gasket 2" Connections
	RAY800013B	RAY800013B	Flange Gasket 55/105A
	RAY800075B	RAY800075B	Header Gasket 155A/153/151 (2 Each)
	RAY800014B	RAY800014B	Tube Seal Gasket set 181/183/185A-401/403/405B
	RAY003898F	RAY003898F	Universal Honeywell Natural Gas Valve
	RAY003899F	RAY003899F	Universal Honeywell Propane Gas Valve
		All Above valves also fit; Laars, Raypak, Comfortzone & Purex	
	RAY600893B	RAY600893B	High-Limit 140°F Fits 153-403 & 155A-405B
	RAY600525B	RAY600525B	Pilot Assembly Nat 53/55A-403/405B (Includes Generator)
	RAY600575B	RAY600575B	Pilot Assembly LP 53/55A-403/405B (Includes Generator)
✻	RAY600827B	RAY600827B	Thermostat fits 153/155A -403/405A
	RAY003346F	RAY003346F	Thermostat fits 53A
	RAY053242B	RAY053242B	UniTherm Governor (only) 155A/153/151
	RAY062234B	RAY062234B	UniTherm Governor 155B,185A-405A/B Versa, 53/55B with spring, governor & gasket
CALL	RAY002439F	RAY002439F	Heat Exchanger 155A/153/151
CALL	RAY004671F	RAY004671F	Heat Exchanger 185A/185B Versa Series
CALL	RAY004672F	RAY004672F	Heat Exchanger 265A/265B Versa Series
CALL	RAY004674F	RAY004674F	Heat Exchanger 403/405 Versa Series
CALL	RAY004896F	RAY004896F	Heat Exchanger 155B/155C Versa Series
CALL	RAY005252F	RAY005252F	Heat Exchanger 185 RP2100 Series
CALL	RAY005253F	RAY005253F	Heat Exchanger 265 RP2100 Series
CALL	RAY005254F	RAY005254F	Heat Exchanger 335 RP2100 Series
CALL	RAY005255F	RAY005255F	Heat Exchanger 405 RP2100 Series
	RAY850252	RAY850252	Bypass Spring, Versa 185A & 265B
	RAY850253	RAY850253	Bypass Spring, Versa 335A & 405B
	RAY650595	RAY650595	Toggle Switch 153/155A-403/405B Single T-Stats

** For heaters with cast iron headers made 1994 to 1998.

All items cataloged are normally stocked unless noted.

Not Stocked ✻ While Supplies Last

Code	New Product Number	Old Product Number	Description
		Heater Parts	
✻	RAY002435F	RAY002435F	In/Out Header 155
✻	RAY002437F	RAY002437F	Return Header 155
✻	RAY002450F	RAY002450F	Return Header 185-405
✻	RAY005299B	RAY005299B	Temp Sensor IID
	RAY005393F	RAY005393F	CPVC 2" MIP Adaptor Kit (set of 2)
	RAY007224F	RAY007224F	Pressure Release Valve Kit 125 PSI

2100 Series Parts (1999 - 2004)

(Heaters with Capron Headers)

RAY006725F

RAY006706F

RAY006707F

RAY006737F

RAY002003F

			Key	
	RAY006725F	RAY006725F	1-C	High Limit
	RAY006701F	RAY006701F	6-C	Temperature Sensor (IID)
	RAY006706F	RAY006706F	2-HP	In/Out Header
	RAY006707F	RAY006707F	3-HP	Return Header
✻	RAY006710F	RAY006710F	4-HP	335 Tube Bundle
✻	RAY006711F	RAY006711F	4-HP	405 Tube Bundle
	RAY006713F	RAY006713F	6-HP	Header Gasket (set of 2)
	RAY006714F	RAY006714F	7-HP	Sensor Adaptor Digital Electronic
	RAY006805F	RAY006805F	7-HP	Sensor Well Millivolt
	RAY006715F	RAY006715F	8-HP	Bypass Kit
	RAY006718F	RAY006718F	11-HP	Bypass Spring
	RAY006719F	RAY006719F	12-HP	Unitherm Governor
	RAY006721F	RAY006721F	14-HP	Drain Plug
	RAY006723F	RAY006723F	16-HP	Flanges 2" PVC Unions with O-ring (set of 2)
	RAY006724F	RAY006724F	17-HP	Flange O-ring (set of 2)
	RAY006736F	RAY006736F	2-J	Transformer
	RAY006737F	RAY006737F	1-M	Pressure Switch
	RAY006739F	RAY006739F	10-M	Switch Panel with Decal
	RAY002003F	RAY002003F	3-P	Pilot - Nat or Pro (IID)
	RAY005264F	RAY005264F		⅛" Drain Plug for Cast Iron Heater
✻	RAY005282F	RAY005282F		Left & Right Firebrick kit - Common to all sizes
✻	RAY005284F	RAY005284F		265 Front & Rear Firebrick kit

All items cataloged are normally stocked unless noted.
◆ Not Stocked ✻ While Supplies Last

QUALITY POOL SUPPLY

HAYWARD®

H-Series - Millivolt/Electronic

(Inground)

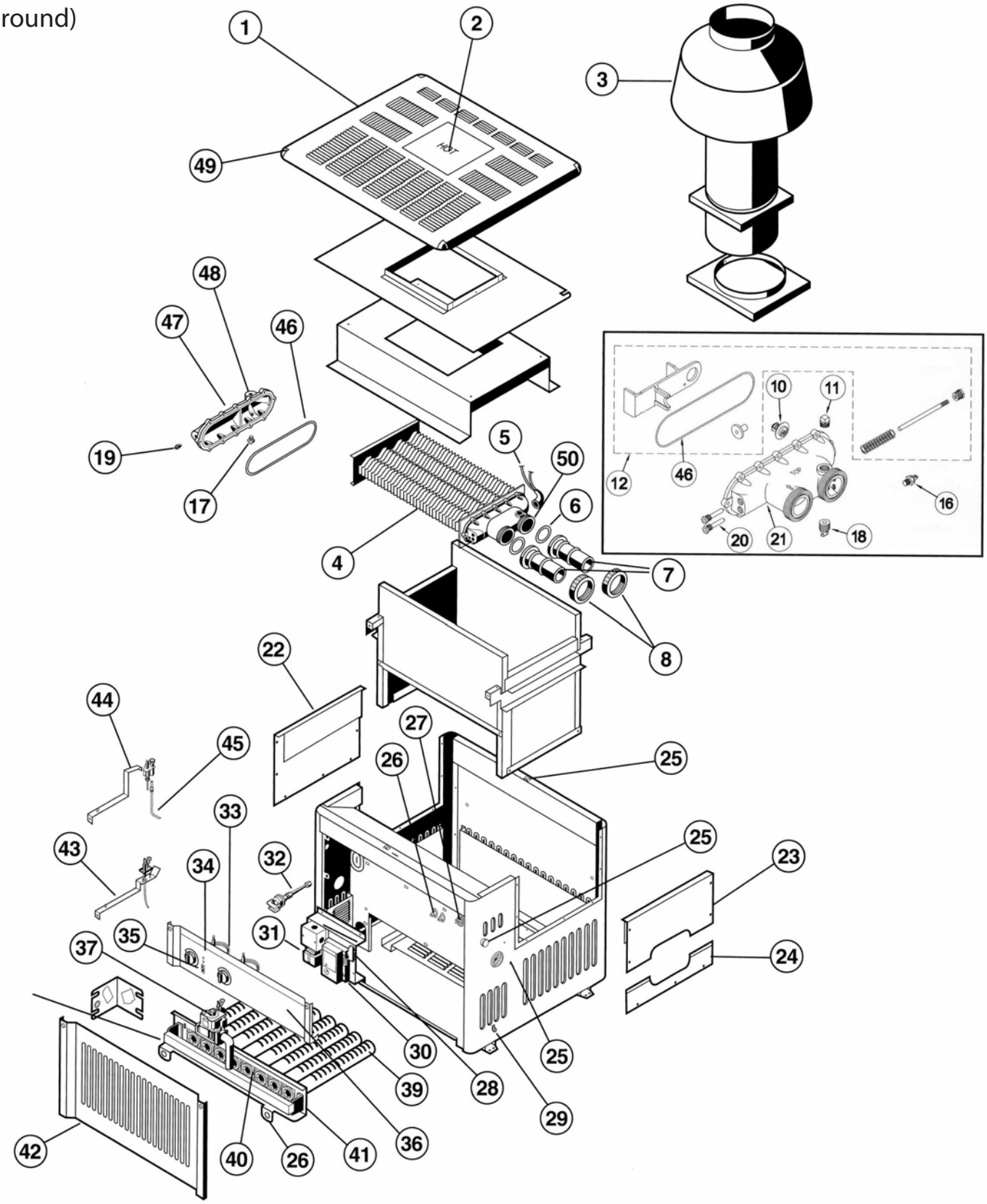

All items cataloged are normally stocked unless noted.

Not Stocked ✻ While Supplies Last

Code	New Product Number	Old Product Number		Description
HAYWARD		**H-Series - Millivolt/Electronic** (Inground)		
◆	HPPHAXHXA1153	HAXHXA1153	4	Heat Exchanger Assembly - 150 BTU
	HPPHAXHXA1203	HAXHXA1203	4	Heat Exchanger Assembly - 200 BTU
	HPPHAXHXA1253	HAXHXA1253	4	Heat Exchanger Assembly - 250 BTU
CALL	HPPHAXHXA1303	HAXHXA1303	4	Heat Exchanger Assembly - 300 BTU
◆	HPPHAXHXA1353	HAXHXA1353	4	Heat Exchanger Assembly - 350 BTU
		Heat Exchanger assemblies include header, hi-limit, temperature sensor, bypass assembly & bulb wells (if millivolt)		
	HPPHAXFOR1930	HAXFOR1930	6	O-ring
	HPPHAXNIP1930	HAXNIP1930	7	Flange Pipe Nipples
	HPPHAXNUT1930	HAXNUT1930	8	Union Nut
	HPPHAXFCT1930	HAXFCT1930	10	Flow Control Thermostat
	HPPHAXBPK1931	HAXBPK1931	12	By-Pass Valve Kit (Heaters made before 10/28/00)
	HPPHAXBPK1932	HAXBPK1932	12	By-Pass Valve Kit (Heaters made after 10/28/00)
	HPPHAXHLI1930	HAXHLI1930	16	Hi-Limit 135 Degree
	HPPHAXDRV1930	HAXDRV1930	18	Drain Valve Assembly
	HPPCHXPSA1930	CHXPSA1930	19	Pressure Switch Adapter (EDI Heaters)
	HPPHAXTLK1930	HAXTLK1930	26	Temperature Limiters Kit
	HPPHAXMOD1930	HAXMOD1930	30	Control Module - MV Only
	HPPHAXPSA1930	HAXPSA1930	32	Pressure Switch Assembly
	HPPHAXTST1930	HAXTST1930	33	Thermostat - MV Only
	HPPCHXTSW1931	CHXTSW1931	35	System Switch Dual (EDI Heaters)
	HPPHAXGSV0001	HAXGSV0001	37	Gas Valve - Millivolt Natural
	HPPHAXGSV0003	HAXGSV0003	37	Gas Valve - Millivolt Propane
	HPPHAXGSV0004	HAXGSV0004	37	Gas Valve - Electronic Propane
	HPPHAXGSV0005	HAXGSV0005	37	Gas Valve - Electronic Natural
	HPPHAXBRN1930	HAXBRN1930	39	Burner Tube (one tube for every 50K of BTU)
	HPPHAXIGN1931	HAXIGN1931	43	Ignitor Assembly
	HPPHAXPLT1931	HAXPLT1931	44	Pilot - Natural Gas
	HPPHAXPLT1932	HAXPLT1932	44	Pilot - Propane
	HPPHAXHOR1930	HAXHOR1930	46	Header O-ring
	HPPIDXLTER1930	IDXLTER1930		Thermistor - ED2 Only (Not Pictured)

All items cataloged are normally stocked unless noted.
◆ Not Stocked ✻ While Supplies Last

HAYWARD

H-Series - Millivolt/Electronic

(Above Ground)

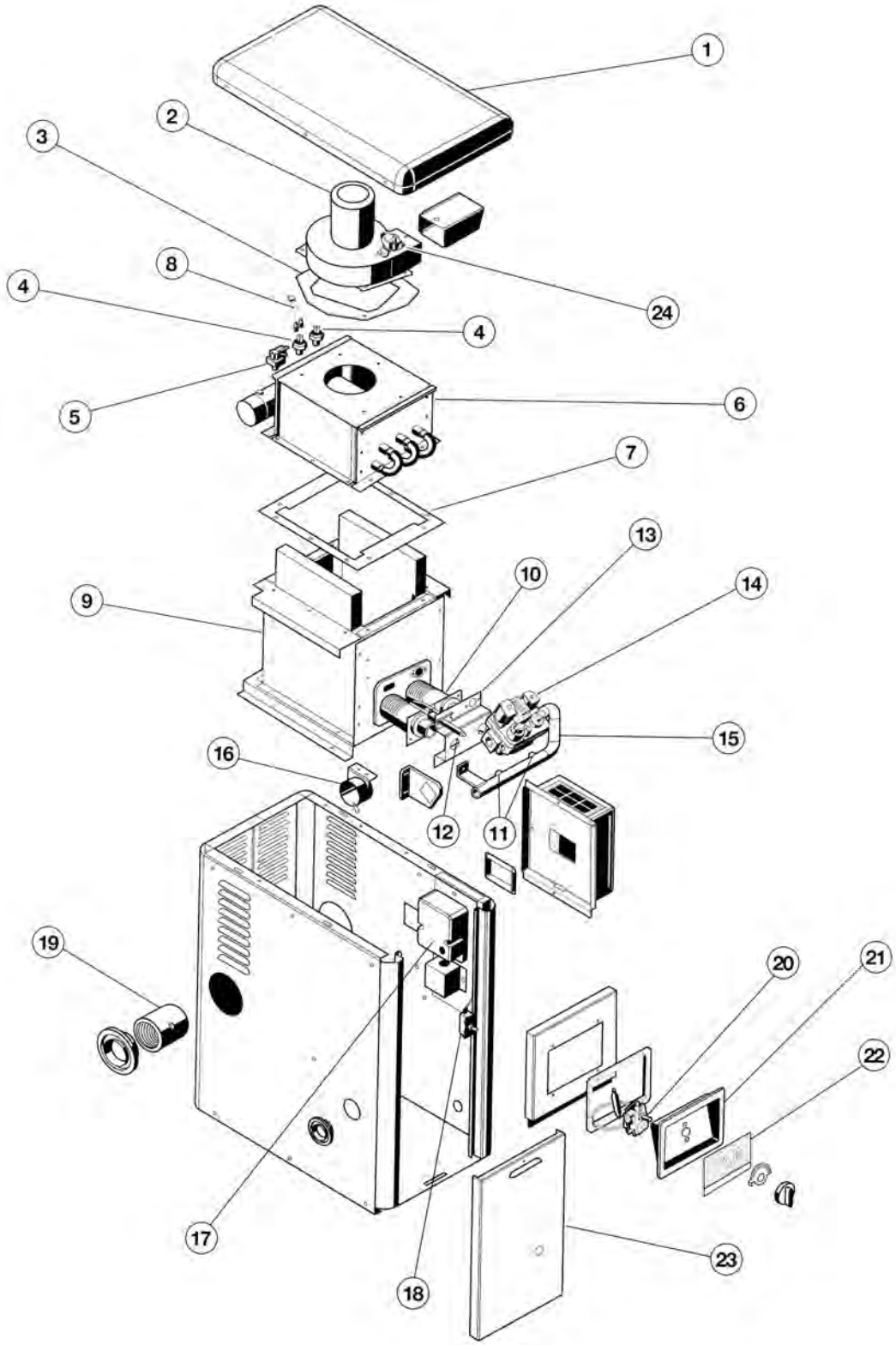

All items cataloged are normally stocked unless noted.

Not Stocked ✻ While Supplies Last

H-Series - Millivolt/Electronic
(Above Ground)

Code	New Product Number	Old Product Number		Description
	HPPIDXJKT1100	IDXJKT1100	1	Jacket Top
	HPPIDXBLG1930	IDXBLG1930	3	Blower Gasket
	HPPIDXHLK1930	IDXHLK1930	4	Hi-Limits Kit
	HPPCZXPRS1105	CZXPRS1105	5	Water Pressure Switch
	HPPIDXHXA1101	IDXHXA1101	6	Heat Exchanger Assembly (starting at serial # 29F30088)
	HPPIDXGKT1930	IDXGKT1930	7	Heat Exchanger Gasket
	HPPIDXWHA1931	IDXWHA1931	8	Wire Harness (starting at serial # 20A01209)
	HPPIDXBRG1930	IDXBRG1930	9	Burner Gasket
	HPPIDXBNR1930	IDXBNR1930	10	Burner
	HPPIDXAGK1930	IDXAGK1930	11	Burner Orifice Kit – Natural Gas (includes orifices & brackets)
*	HPPIDXAGK1931	IDXAGK1931	11	Orifice Kit - Propane (includes orifices & brackets)
	HPPIDXIGN1930	IDXIGN1930	12	Ignitor
	HPPIDXVAL1931	IDXVAL1931	14	Gas Valve
	HPPIDXMAN1100	IDXMAN1100	15	Gas Manifold
	HPPIDXAPS1930	IDXAPS1930	16	Air Pressure Switch
	HPPIDXMOD1930	IDXMOD1930	17	Control Module
	HPPIDXCPG1931	IDXCPG1931	19	Coupling
	HPPIDXTST1930	IDXTST1930	20	Thermostat
	HPPIDXCPA1100	IDXCPA1100	21	Control Panel (old # IDXCPL1100)
	HPPIDXFAD1101	IDXFAD1101	23	Front Access Door (starting at serial # 20A01209)
	HPPIDXBLS1930	IDXBLS1930	24	Blower Switch
	HPPIDXCNK1933	IDXCNK1933		Conversion Kit - Natural to Propane
	HPPIDXCNK1934	IDXCNK1934		Conversion Kit - Propane to Natural

► Each tube and burner are 50,000 BTU.

All items cataloged are normally stocked unless noted.
◆ Not Stocked ✻ While Supplies Last

QUALITY POOL SUPPLY

HAYWARD®

Universal Heater Parts

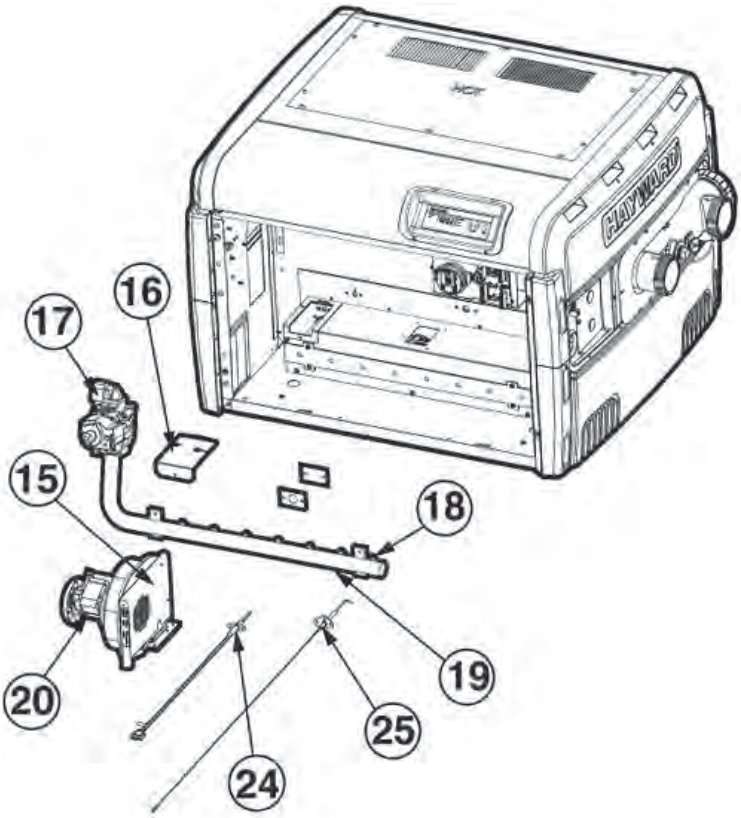

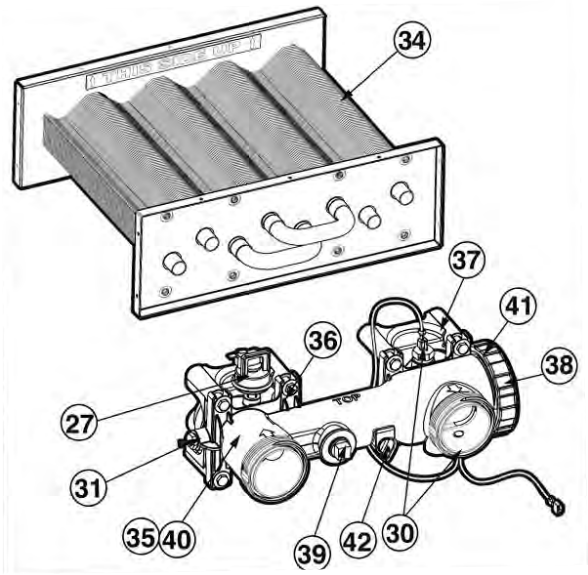

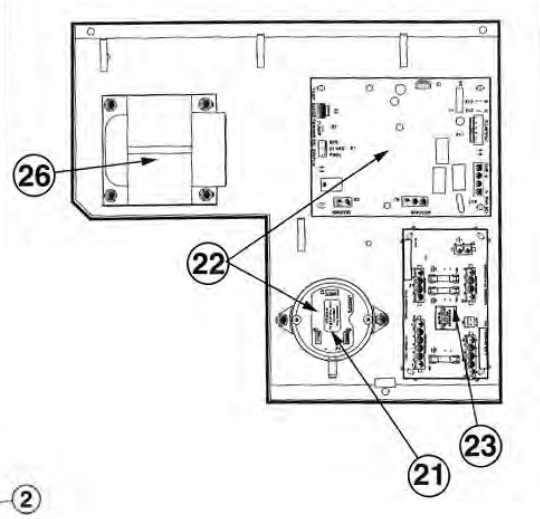

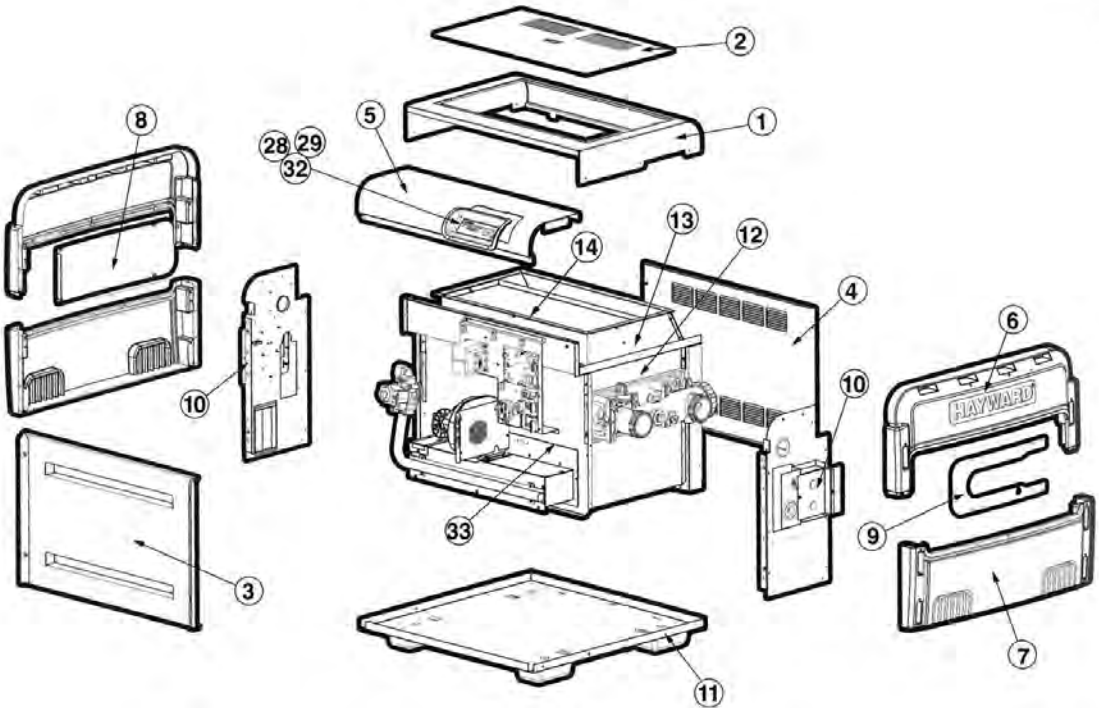

All items cataloged are normally stocked unless noted.

Not Stocked ✻ While Supplies Last

Code	New Product Number	Old Product Number		Description
		Universal Heater Parts		
	HPPFDXLGSV0001	FDXLGSV0001	17	Gas Valve - Natural Gas
	HPPFDXLGSV0002	FDXLGSV0002	17	Gas Valve - Propane
	HPPFDXLICB1930	FDXLICB1930	22	Integrated Control Board
	HPPFDXLFWP1930	FDXLFWP1930	23	Field Wiring Panel
	HPPFDXLIGN1930	FDXLIGN1930	24	Ignitor
	HPPIDXLFLS1930	IDXLFLS1930	25	Flame Sensor
	HPPIDXL2TRF1930	IDXL2TRF1930	26	Transformer
	HPPFDXLWPS1930	FDXLWPS1930	27	Pressure Switch
	HPPIDXL2DB1930	IDXL2DB1930	28	Display Board Only
	HPPFDXLBKP1930	FDXLBKP1930	29	Bezel & Keypad Assembly (Taupe)
	HPPFDXLBKP1932	FDXLBKP1932	29	Bezel & Keypad Assembly with door (Blue)
	HPPFDXLHLI1930	FDXLHLI1930	30	High Limit - 135 Degree
	HPPFDXLTER1930	FDXLTER1930	31	Thermistor
	HPPFDXLHXA1150	FDXLHXA1150	34	Heat Exchanger Assembly - H150FD
	HPPFDXLHXA1200	FDXLHXA1200	34	Heat Exchanger Assembly - H200FD
	HPPFDXLHXA1250	FDXLHXA1250	34	Heat Exchanger Assembly - H250FD
	HPPFDXLHXA1300	FDXLHXA1300	34	Heat Exchanger Assembly - H300FD
	HPPFDXLHXA1350	FDXLHXA1350	34	Heat Exchanger Assembly - H350FD
	HPPFDXLHXA1400	FDXLHXA1400	34	Heat Exchanger Assembly - H400FD
	HPPFDXLFHA1930	FDXLFHA1930	35	Header Assembly
	HPPFDXLBPK1930	FDXLBPK1930	38	Bypass Cartridge Kit
	HPPSPX4000FG	SPX4000FG	42	Drain Plug with Gasket
	HPPFDXLFSK1930	FDXLFSK1930		Fuse Service Kit
	HPPSPX3200UNKIT	SPX3200UNKIT		Union Kit
	HPPFDXLCNK0001	FDXLCNK0001		Conversion Kit - Natural Gas to Propane
CALL	HPPFDXLCNK0002	FDXLCNK0002		Conversion Kit - Propane to Natural Gas
		Hayward CZ-Series Models 150-400		
	HPPHAXDRV1930	HAXDRV1930		Drain Valve Assembly
	HPPCHXTST1930	CHXTST1930		Thermostat without knobs
	HPPCHXTSW1930	CHXTSW1930		On/Off Switch
	HPPCHXPRS1931	CHXPRS1931		Pressure Switch
	HPPCHXGEN1930	CHXGEN1930		Pilot Generator
✻	HPPCZXGKT7401	CZXGKT7401		Bucket Gasket for CGR through CPS & CLC Heaters (Not Pictured)

All items cataloged are normally stocked unless noted.
◆ Not Stocked ✻ While Supplies Last

QUALITY POOL SUPPLY

PENTAIR

MiniMax NT STD Heater Parts

Code	New Product Number	Old Product Number	Description	
	PEN460760	460760	Kit Gas Valve NT Nat - Includes: 2 Pcs - Screw 8 x .5 SS, 1 Pc - Valve Gas Mx Nt Nat His 1 Pc- Jacket Lwr Lft MMX NT, 1 Pc- Gas Brkt Vlv MX Nt STD, 1 Pc- Steel .75" Str 90 Blk, 1 Instruction Guide	
	PEN460761	460761	Kit Gas Valve NT Pro- Includes: 2 Pcs- Screw 8 x .5 SS, 1 Pc - Jacket Lwr Lft MMX NT, 1 Pc- Gas Valve Propane, 1 Pc - Gas Brkt Valve MX NT STD, 1 Pc- Steel .75" Str 90 Blk, 1 Instruction Guide	
◆	PEN471701	471701	2	Gasket, exhaust grill
CALL	PEN472376	472376	5	250 Exhaust assembly
✻	PEN472361	472361	5	200 Blower with gasket
◆	PEN471610	471610	6	Gasket, blower
◆	PEN472270	472270	8	Insulation, header/Hi-Limit
	PEN471991	471991	9	Return header assembly
◆	PEN471622	471622	10	Bolt, heat exchanger
CALL	PEN072184	072184	11	Washer, heat exchanger

All items cataloged are normally stocked unless noted.

Not Stocked ✻ While Supplies Last

PENTAIR

MiniMax NT STD Heater Parts (continued)

Code	New Product Number	Old Product Number		Description
◆	PEN471910	471910	13	200 Heat exchanger with headers
◆	PEN471785	471785	13	250 Heat exchanger with headers
◆	PEN471928	471928	13	300 Heat exchanger with headers
	PEN471933	471933	13	200 Heat exchanger without headers
◆	PEN471935	471935	13	300 Heat exchanger without headers
◆	PEN471936	471936	13	400 Heat exchanger without headers
◆	PEN471896	471896	14	300 Baffle, heat exchanger
◆	PEN471640	471640	14	400 Baffle, heat exchanger
	PEN471566	471566	15	Thermistor probe
	PEN471587	471587	16	Hi-Limit thermostat 115 F
	PEN471694	471694	17	Hi-Limit thermostat 150 F
	PEN473605	473605	18	Water pressure switch, NON-ASME
	PEN472363	472363	19	In/Out top sub-header assembly
	PEN471992	471992	20	In/Out top header assembly
	PEN472364	472364	21	In/Out bottom sub-header
	PEN471420	471420	22	Cap, in/out bottom sub-header
	PEN274494	274494	23	O-ring, adapter
	PEN274440	274440	24	Adapter, bulkhead ring
	PEN471441	471441	25	Adapter, bulkhead ring 2lin.
	PEN070951	070951	26	Gasket, fin tube, seal
	PEN471750	471750	27	Flow valve assembly
◆	PEN472330	472330	28	Power element, flow valve
	PEN472604	472604	31	Igniter NT TSI STD
CALL	PEN471603	471603	32	Flame sensor
CALL	PEN070230	070230	35	Burner - 200 (2ea), 250 (3ea), 300 (4ea), 400 (6ea)
❋	PEN471970	471970	35	Burner with bracket
◆	PEN471576	471576	37	Jacket, upper panel, right
◆	PEN471767	471767	38	Jacket, upper sub-plate
	PEN472447	472447	42	Module, ignition control
	PEN472100	472100	43	DDTC board
	PEN075173	075173		Thermal cut off
	PEN471571	471571		Transformer 40 VA
	PEN460506	460506		Indoor vent adaptor 4”
	PEN460507	460507		Indoor vent adaptor 5”

All items cataloged are normally stocked unless noted.
◆ Not Stocked ❋ While Supplies Last

PENTAIR

Mastertemp®
Water System Parts

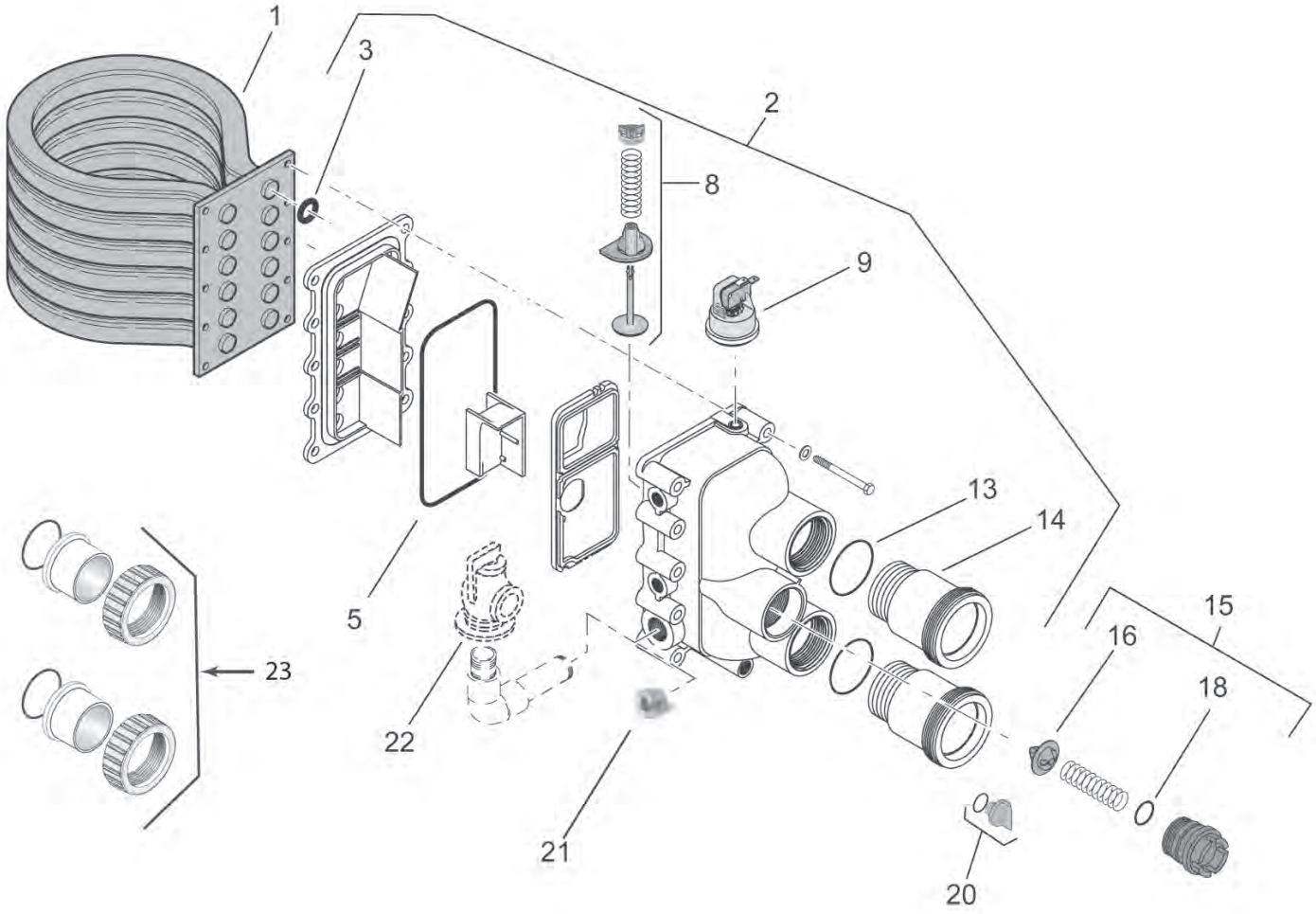

All items cataloged are normally stocked unless noted.

Not Stocked ✻ While Supplies Last

Mastertemp® Water System Parts

Code	New Product Number	Old Product Number		Description
	PEN777070232	77707-0232	1	Tube Sheet Coil Assembly (Includes No. 3) Model 200
◆	PEN474058	474058	1	Tube Sheet Coil Assembly (Includes No. 3) Model 200 After 1-12-09
◆	PEN460747	460747	1	Tube Sheet Coil Assembly (Includes No. 3) Model 250
◆	PEN474059	474059	1	Tube Sheet Coil Assembly (Includes No. 3) Model 250 After 1-12-09
	PEN777070233	77707-0233	1	Tube Sheet Coil Assembly (Includes No. 3) Model 300
◆	PEN474060	474060	1	Tube Sheet Coil Assembly (Includes No. 3) Model 300 After 1-12-09
	PEN777070234	77707-0234	1	Tube Sheet Coil Assembly (Includes No. 3) Model 400
	PEN474061	474061	1	Tube Sheet Coil Assembly (Includes No. 3) Model 400 After 1-12-09
	PEN777070014	77707-0014	2	Manifold Kit (Includes No. 3-14,21 and 5-7 in Electrical System) Model 200
◆	PEN460748	460748	2	Manifold Kit (Includes No. 3-14,21 and 5-7 in Electrical System) Model 250
	PEN777070015	77707-0015	2	Manifold Kit (Includes No. 3-14,21 and 5-7 in Electrical System) Model 300
	PEN777070016	77707-0016	2	Manifold Kit (Includes No. 3-14,21 and 5-7 in Electrical System) Model 400
◆	PEN777070117	77707-0117	3	Coil/Tubesheet Sealing O-ring Kit Model 200 (6 Gaskets)
	PEN460749	460749	3	Coil/Tubesheet Sealing O-ring Kit Model 250 (8 Gaskets)
	PEN777070118	77707-0118	3	Coil/Tubesheet Sealing O-ring Kit Model 300 (10 Gaskets)
	PEN777070119	77707-0119	3	Coil/Tubesheet Sealing O-ring Kit Model 400 (12 Gaskets)
	PEN777070001	77707-0001	8	Manifold Bypass Valve Kit
	PEN420010060S	42001-0060S	9	Water Pressure Switch
	PEN777070017	77707-0017	14	Connector Tube Kit (Includes 1 Connector and 1 O-ring)
	PEN777070010	77707-0010	15	Thermal Regulator Kit (Includes No. 16 - 19 and Spring Clip
	PEN380000007S	38000-0007S	16	Thermal Regulator (includes Spring Clip)
◆	PEN355051313	35505-1313	18	Thermal Regulator Cap O-ring
	PENU178920P	U178-920P	20	Drain Plug
	PENPKG188	PKG188	23	2" Union Adapter Package of 2

All items cataloged are normally stocked unless noted.
◆ Not Stocked ✻ While Supplies Last

QUALITY POOL SUPPLY

PENTAIR

Mastertemp®
Burner System Replacement Parts

For Heater mounting bolts and clamps, purchase separately Bolt Down Bracket Kit, Part No. 460738.

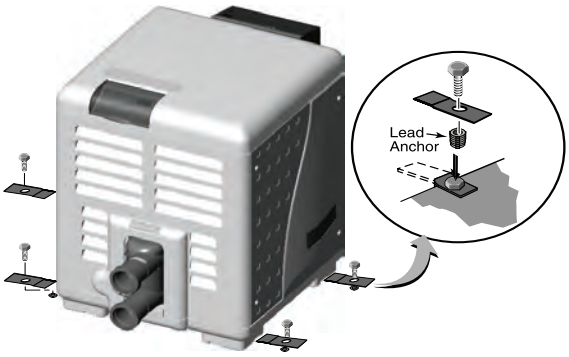

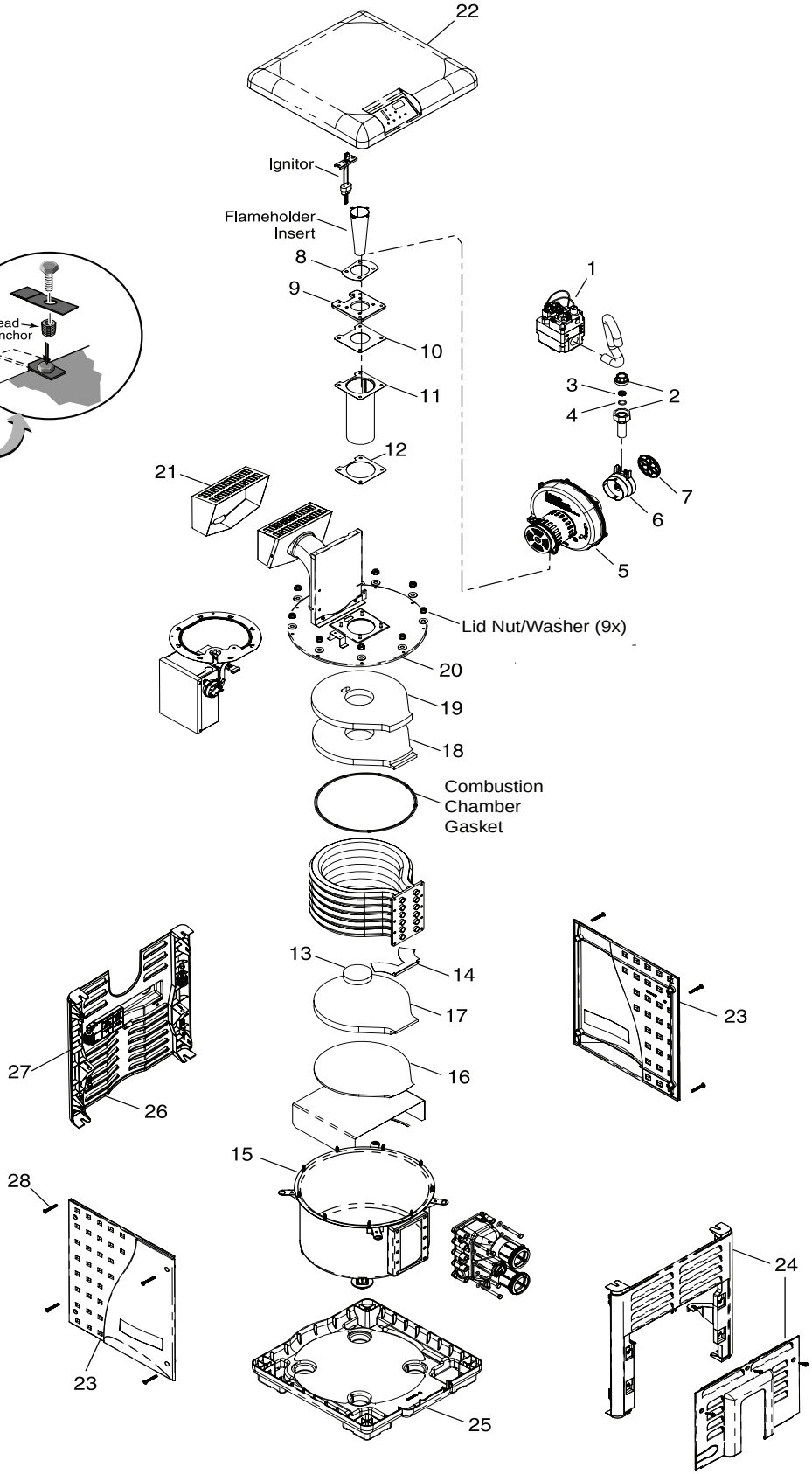

CLAMP LID TUB DESIGN

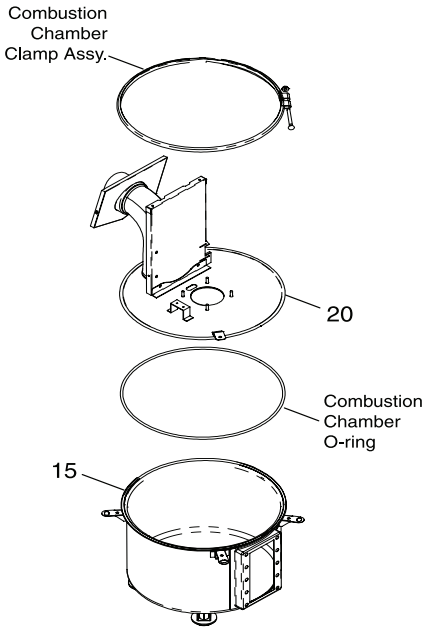

For heaters manufactured between 1/12/2009 and 10/31/2013 (clamp lid tub design)
Note: Kits also include Clamp Assembly, O-Ring and Silicon Tube (see page 52)

All items cataloged are normally stocked unless noted.

Not Stocked ✻ While Supplies Last

Mastertemp® Burner System Replacement Parts

Code	New Product Number	Old Product Number		Description
	PEN420010051S	42001-0051S	1	Combination Gas Control Valve Kit
	PEN777070251	77707-0251	5	Air Blower Kit - Natural Gas Units (200,000 Btu)
◆	PEN460743	460743	5	Air Blower Kit - Natural Gas Units (250,000 Btu)
	PEN460757	460757	5	Air Blower Kit - Natural Gas Units (300,000 Btu)
	PEN777070253	77707-0253	5	Air Blower Kit - Natural Gas Units (400,000 Btu)
	PEN777070254	77707-0254	5	Air Blower Kit - Propane Units (200,000 Btu)
	PEN460744	460744	5	Air Blower Kit - Propane Units (250,000 Btu)
	PEN777070111	77707-0111	7	Air Orifice Kit - Model 200
	PEN460745	460745	7	Air Orifice Kit - Model 250
	PEN460759	460759	7	Air Orifice Kit - Model 300
◆	PEN777070113	77707-0113	7	Air Orifice Kit - Model 400
◆	PEN474095	474095	15	One Piece Metal Combustion Chamber (1-12-09 - 10/31/13)
◆	PEN474957	474957	15	One Piece Metal Combustion Chamber (After 11/16/13)
◆	PEN474201	474201	20a	Tub O-ring Kit (For Heaters 1/12/09 - 10-31-13)
◆	PEN474952	474952	20b	Tub O-ring Kit (For Heaters After 11-16-13)
	PEN420020005S	42002-0005S	21	Metal Vent Cover
◆	PEN420020034Z	42002-0034Z	22	Heater Top
◆	PEN420020039Z	42002-0039Z	23	Side Panel (Service Panel) with 4 Clips and 4 Screws
◆	PEN420020033Z	42002-0033Z	24	Side Panel (Manifold)
◆	PEN420020031Z	42002-0031Z	25	Heater Bottom
◆	PEN420020032Z	42002-0032Z	26	Side Panel (Flue Stack)
◆	PEN420020041Z	42002-0041Z	27	J Box Cover
◆	PEN474292	474292	28	11 ea Screws, 11 ea Clips, and 8 wing-nuts

All items cataloged are normally stocked unless noted.
◆ Not Stocked ✻ While Supplies Last

QUALITY POOL SUPPLY

Code	New Product Number	Old Product Number	Description

PENTAIR

Mastertemp®
Electrical System Replacement Parts

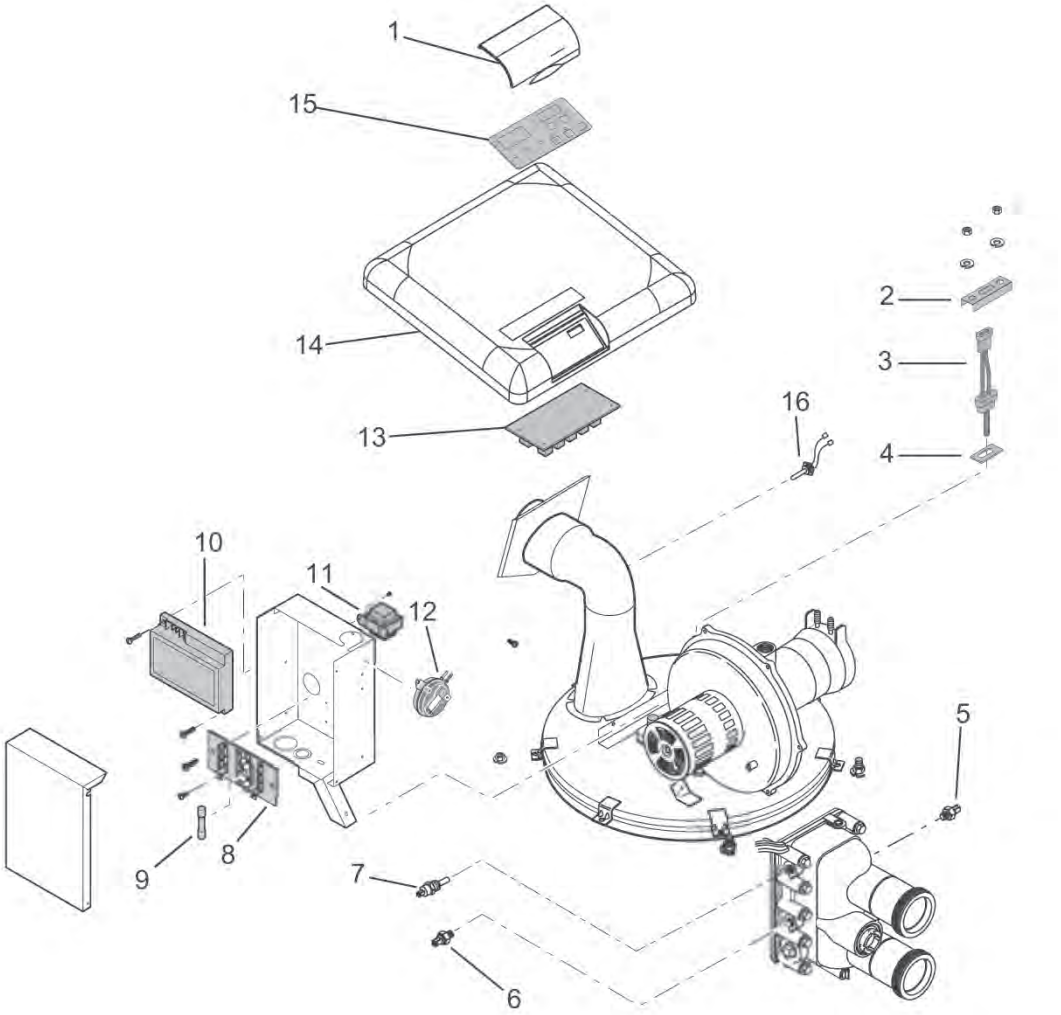

	PEN420020035Z	42002-0035Z	1	Heater Display Cover
	PEN420010030S	42001-0030S	2	Igniter Bracket
	PEN777070054	77707-0054	3	Igniter/Igniter Gasket Kit (Incl. No 3 & 4)
	PEN420010066S	42001-0066S	4	Igniter Gasket
	PEN420020025S	42002-0025S	5	Automatic Gas Shutoff Switch (AGS)
	PEN420010063S	42001-0063S	6	High Limit Switch
	PEN420010053S	42001-0053S	7	Thermistor
	PEN420010056S	42001-0056S	8	Terminal Board
	PEN420010052S	42001-0052S	10	Ignition Control Module
	PEN420010107S	42001-0107S	11	Transformer, 115/230V
	PEN420010061S	42001-0061S	12	Air Flow Switch
	PEN420020007S	42002-0007S	13	Control Board Kit (NA,LP Series)
	PEN420020024S	42002-0024S	16	Stack Flue Sensor

All items cataloged are normally stocked unless noted.

Not Stocked ✻ While Supplies Last

Mastertemp® 125 Water System Replacement Parts

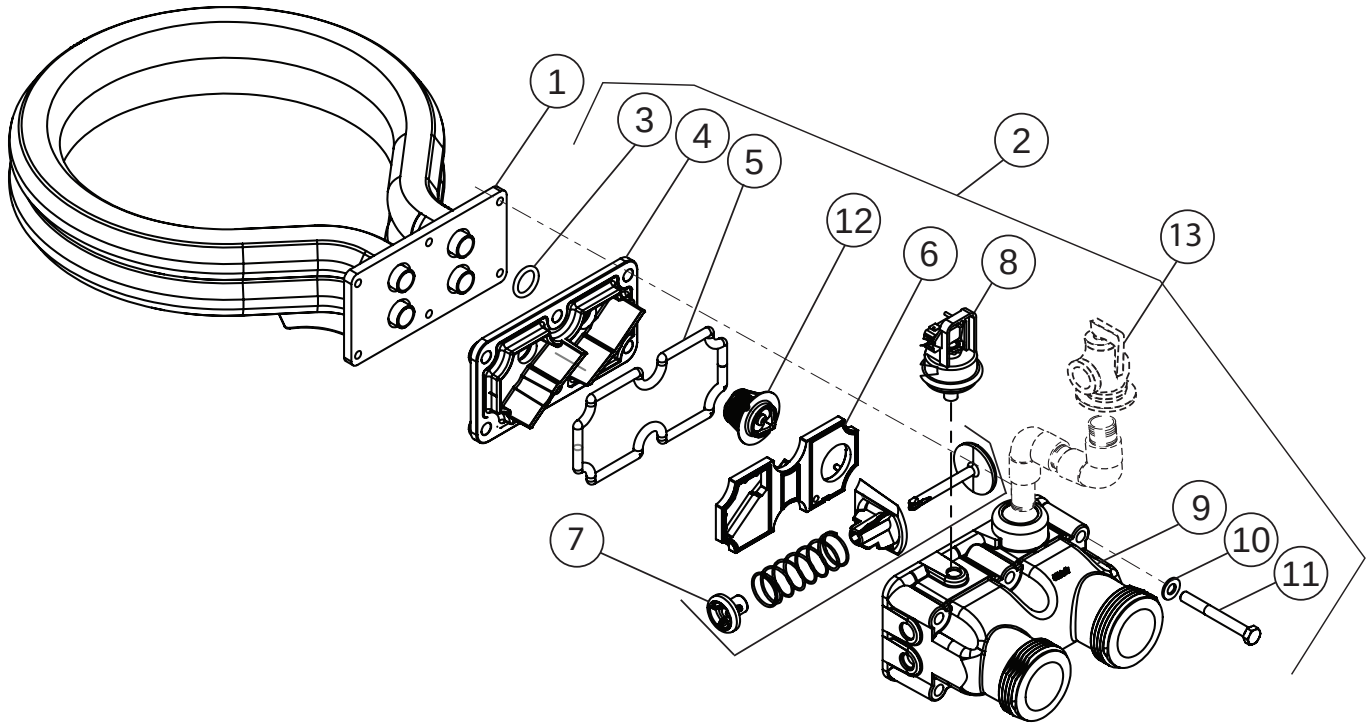

Code	New Product Number	Old Product Number		Description
◆	PEN474971	474971	1	Tube Sheet Coil Assembly-Includes Item #3 (NA/LP Series)
◆	PEN474972	474972	2	Manifold Kit (Includes Item #3 - 7, 9-11)
◆	PEN474973	474973	3	Coil/Tubesheet Sealing O-ring Kit
			4	Manifold Bottom Kit (Not Available Separately, See Item #2)
			5	Manifold O-ring (Not Available Separately, See Item #2)
			6	Manifold Baffle Plate (Not Available Separately, See Item #2)
			7	Manifold Bypass Valve (Not Available Separately, See Item #2)
	PEN420010060S	42001-0060S	8	Water Pressure Switch
			9	Manifold (Not Available Separately, See Item #2)
			10	5⁄16" Washer, S.S. (Not Available Separately, See Item #2)
			11	5⁄16 x 18 x 2¾" Hex Cap Screw (Not Available Separately, See Item #2)
◆	PEN474989	474989	12	Thermal Regulator
	PEN473715Z	473715Z	13	Pressure Relief Valve (Recommended - Purchased Separately)

All items cataloged are normally stocked unless noted.
◆ Not Stocked ✻ While Supplies Last

QUALITY POOL SUPPLY

PENTAIR

Mastertemp® 125
Burner System Replacement Parts

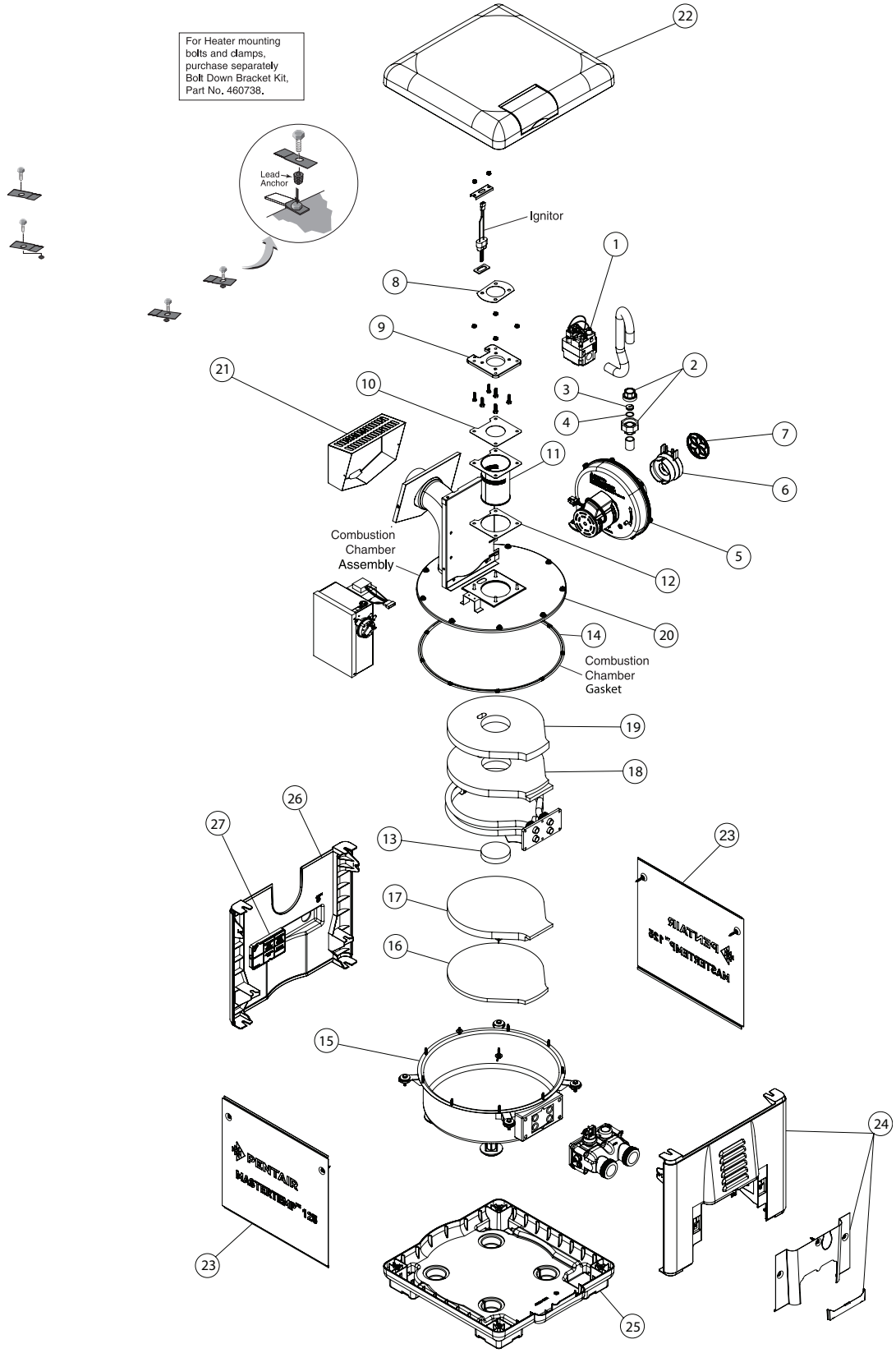

All items cataloged are normally stocked unless noted.

Not Stocked ✻ While Supplies Last

Mastertemp® 125 Burner System Replacement Parts

Code	New Product Number	Old Product Number	Description	
	PEN420010051S	42001-0051S	1	Combination Gas Control Valve Kit
◆	PEN384044097S	38404-4097S	2	Service Union ¾
◆	PEN474978	474978	5	Air Blower Kit - Natural Gas
◆	PEN474977	474977	5	Air Blower Kit - Propane
◆	PEN474979	474979	6	Air Orifice Kit (Includes # 6 & 7)
◆	PEN474952	474952	14	Combustion Chamber Gasket Kit
◆	PEN474990	474990	15	One Piece Metal Chamber/Combustion Chamber Assembly
◆	PEN474958	474958	20	One Piece Metal Elbow/Combustion Chamber Cover Assembly
	PEN420020005S	42002-0005S	21	Metal Vent Cover
◆	PEN420020034Z	42002-0034Z	22	Heater Top
◆	PEN474991	474991	23	Side Panel (Service Panel)
◆	PEN474992	474992	24	Side Panel (Manifold)
◆	PEN420020031Z	42002-0031Z	25	Heater Bottom
◆	PEN474993	474993	26	Side Panel (Flue Stack)
◆	PEN420020041Z	42002-0041Z	27	J Box Cover
◆	PEN474292	474292	28	Clips and Screws (8 ea)
◆	PEN474981	474981		Gas Orifice Kit - Natural Gas (Includes # 3 & 4)
◆	PEN474980	474980		Gas Orifice Kit - Propane (Includes # 3 & 4)
◆	PEN777070011	77707-0011		Blower/Adapter Plate Gasket Kit (Include # 8, 9, 10, 12)
◆	PEN474994	474994		Flameholder Kit (Includes #10, 11, 12, 13)
	PEN777070008	77707-0008		Insulation Kit (Includes # 13, 14, 16, 17, 18, 19)

All items cataloged are normally stocked unless noted.
◆ Not Stocked ✻ While Supplies Last

QUALITY POOL SUPPLY

PENTAIR

Mastertemp® 125
Electrical System Replacement Parts

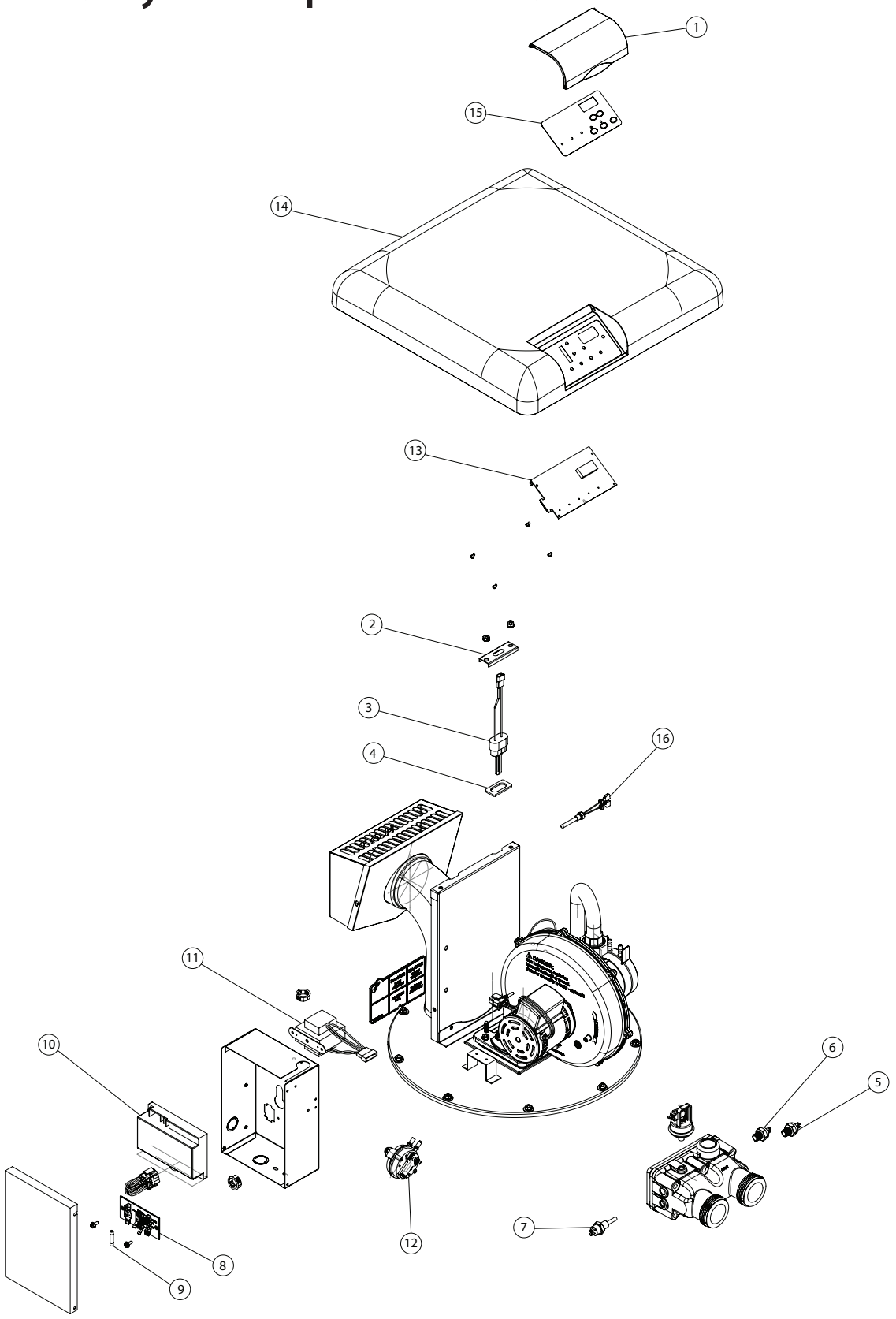

All items cataloged are normally stocked unless noted.

Not Stocked ✻ While Supplies Last

Mastertemp® 125 Electrical System Replacement Parts

Code	New Product Number	Old Product Number		Description
◆	PEN420020035Z	42002-0035Z	1	Heater Display Cover
◆	PEN420010030S	42001-0030S	2	Igniter Bracket
	PEN777070054	77707-0054	3	Igniter Gasket Kit (Includes Igniter and Gasket)
◆	PEN420010066S	42001-0066S	4	Igniter Gasket Only
◆	PEN474368Z	474368Z	5	Automatic Gas Shutoff Switch
◆	PEN474367Z	474367Z	6	High Limit Switch
	PEN420010053S	42001-0053S	7	Thermistor
◆	PEN420010056S	42001-0056S	8	Terminal Board
◆	PEN328500099	32850-0099	9	Fireman's Switch Fuse (1.25A, 1¼")
	PEN420010052S	42001-0052S	10	Ignition Control Module
	PEN420010107S	42001-0107S	11	Transformer, 115/230V
	PEN420010061S	42001-0061S	12	Air Flow Switch
	PEN420020007S	42002-0007S	13	Control Board Kit (NA/LP Series)
◆	PEN420020034Z	42002-0034Z	14	Heater Top
◆	PEN472610Z	472610Z	15	Membrane Pad (NA/LP Series)
	PEN420020024S	42002-0024S	16	Stack Flue Sensor
◆	PEN420010104S	42001-0104S		Heater Wiring Harness -115/230V (Not Pictured)
◆	PEN420010105S	42001-0105S		120/240 Volt Plug Kit (Not Pictured)

All items cataloged are normally stocked unless noted.
◆ Not Stocked ✻ While Supplies Last

QUALITY POOL SUPPLY

Code	New Product Number	Old Product Number	Description

STA-RITE®

Max-E-Therm Water System

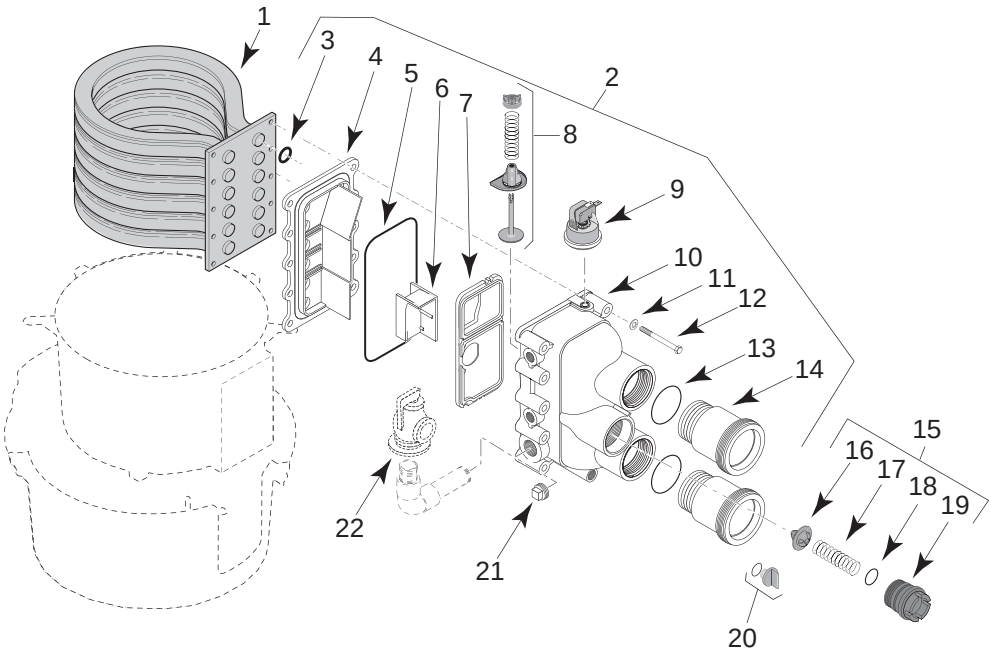

			Model Number				
			200	333	400	Key	
	PEN777070232	77707-0232	x			1,3	Tube Sheet Coil Assembly Kit (Threaded)
	PEN777070233	77707-0233		x		1,3	Tube Sheet Coil Assembly Kit (Threaded)
	PEN777070234	77707-0234			x	1,3	Tube Sheet Coil Assembly Kit (Threaded)
	PEN777070014	77707-0014	x			2	Complete Manifold Assembly
	PEN777070015	77707-0015		x		2	Complete Manifold Assembly
	PEN777070016	77707-0016			x	2	Complete Manifold Assembly
	PEN777070117	77707-0117	x			3	Sealing O-ring Kit (6 required)
	PEN777070118	77707-0118		x		3	Sealing O-ring Kit (10 required)
	PEN777070119	77707-0119			x	3	Sealing O-ring Kit (12 required)
	PEN777070120	77707-0120	x	x	x	3,5	O-ring Kit
	PEN777070207	77707-0207	x			3-7	Internal Assembly Kit for 200N
	PEN777070208	77707-0208		x		3-7	Internal Assembly Kit for 333N
	PEN777070209	77707-0209			x	3-7	Internal Assembly Kit for 400N
	PEN777070001	77707-0001	x	x	x	8	Manifold Bypass Valve Kit
	PEN420010060S	42001-0060S	x	x	x	9	Water Pressure Switch
	PEN777070206	77707-0206	x	x	x	10,3,5	Manifold Body Only (Includes O-ring Kit)
	PENU4341SS	U43-41SS	x	x	x	11	5⁄16 Flat Washer (10 required)
	AEQO49	O-49	x	x	x	13	Connector Tube O-ring, U9-226 (2 required)
	PEN777070017	77707-0017	x	x	x	13,14	Connector Tube Kit (1 tube, 1 O-ring)
	PEN777070010	77707-0010	x	x	x	15	Thermal Regulator Kit (Includes Spring Clip)
	PEN380000007S	38000-0007S	x	x	x	16	Thermal Regulator (Includes Spring Clip)
	AEQO122	O-122	x	x	x	18	Thermal Regulator Cap O-ring, 35505-1313
	PENU178920P	U178-920P	x	x	x	20	Drain Plug

All items cataloged are normally stocked unless noted.

Not Stocked ✻ While Supplies Last

Code	New Product Number	Old Product Number	Description

STA-RITE®

Max-E-Therm Electrical System

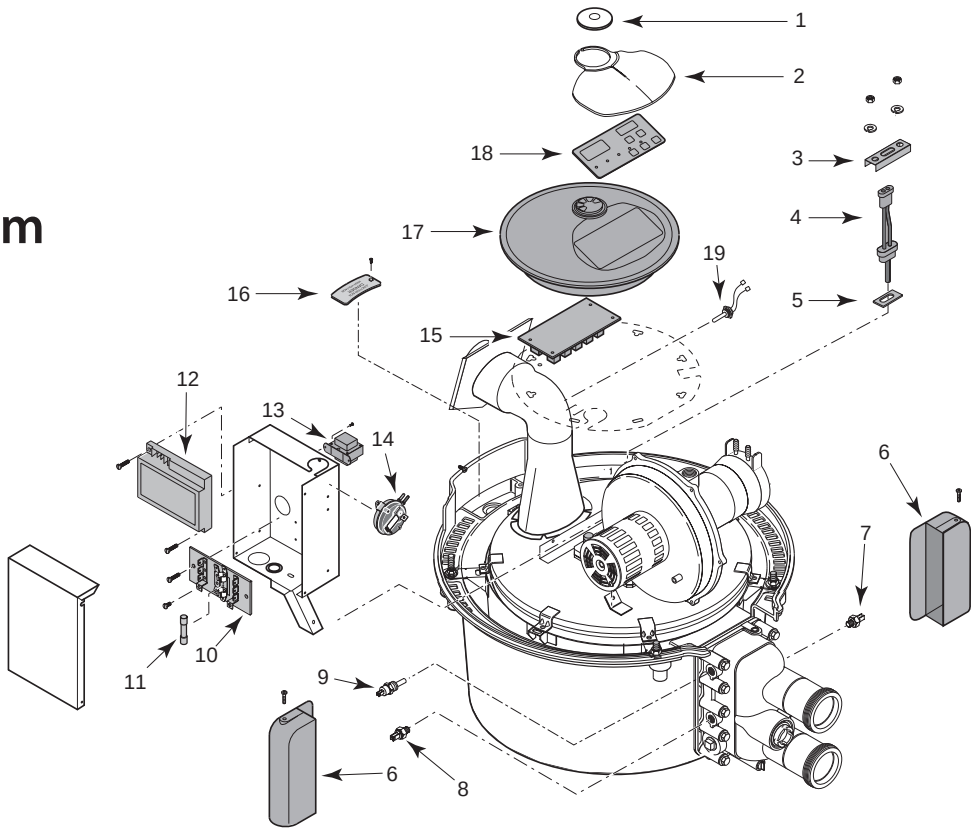

			Model Number				
			200	333	400	Key	
	PEN777070009	77707-0009	x	x	x		Display Cover Retainer Cap Kit Includes 1
	PEN420010008S	42001-0008S	x	x	x	2	Heater Display Cover
	PEN420010030S	42001-0030S	x	x	x	3	Igniter Bracket
	PEN777070054	77707-0054	x	x	x	4,5	Igniter Gasket Kit Includes 4 & 5
	PEN420010066S	42001-0066S	x	x	x	5	Igniter Gasket
	PEN420010007S	42001-0007S	x	x	x	6	Manifold Switch Cover
	PEN420020025S	42002-0025S	x	x	x	7	Automatic Gas Shutoff Switch (AGS)
	PEN420010063S	42001-0063S	x	x	x	8	High Limit Switch
	PEN420010053S	42001-0053S	x	x	x	9	Thermistor
	PEN420010056S	42001-0056S	x	x	x	10	Terminal Board
	PEN328500099	32850-0099	x	x	x	11	Fireman's Switch Fuse
	PEN420010052S	42001-0052S	x	x	x	12	Ignition Control Module
	PEN420010107S	42001-0107S	x	x	x	13	Transformer (New Style - Dual Voltage)
	PEN420010057S	42001-0057S	x	x	x	13	Transformer (Old Style - Single Voltage)
	PEN420010061S	42001-0061S	x	x	x	14	Air Flow Switch
	PEN420020007S	42002-0007S	x	x	x		Control Board Kit (6-Pin)
	PEN420010058S	42001-0058S	x	x	x		Heater Wiring Harness
	PEN777070022	77707-0022	x	x	x	16	Junction Box Cover Kit
	PEN777070013	77707-0013	x	x	x	17,18	Control Bd Encl/Membrane Panel Kit
	PEN420020029Z	42002-0029Z	x	x	x	18	Switch Membrane Replacement
	PEN420020024S	42002-0024S	x	x	x	19	Stack Flue Sensor Kit
✻	PEN420010405	42001-0405					Heater Exhaust Temperature Probe Kit

All items cataloged are normally stocked unless noted.
◆ Not Stocked ✻ While Supplies Last

QUALITY POOL SUPPLY

STA-RITE®

Max-E-Therm Burner System

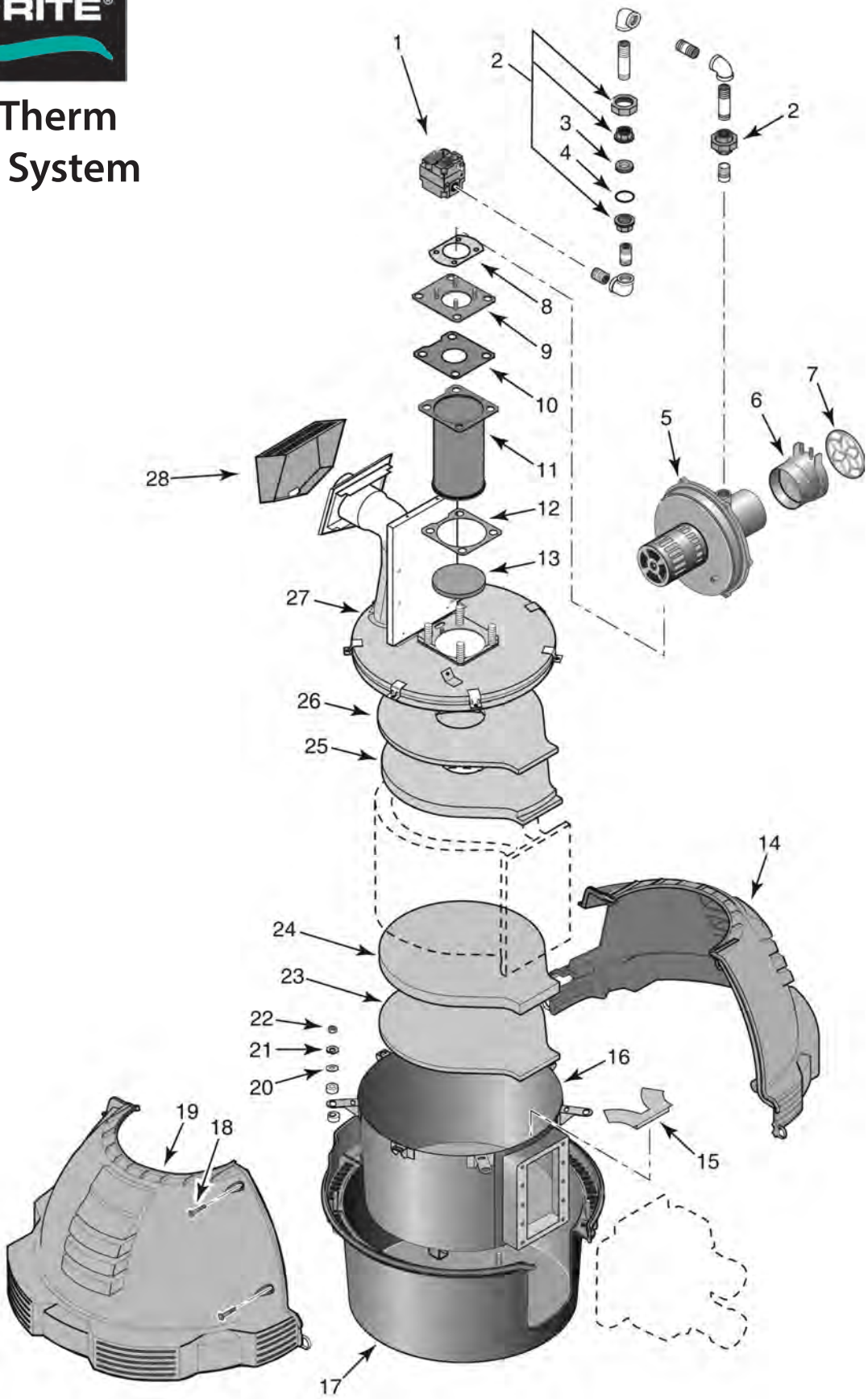

All items cataloged are normally stocked unless noted.

Not Stocked ✻ While Supplies Last

Max-E-Therm Burner System

Code	New Product Number	Old Product Number	Model Number 200	333	400	Key	Description
	PEN420010051S	42001-0051S	x	x	x	1	Combination Gas Control Valve Kit
	PEN777071341	77707-1341			x		Natural to LP Conversion Kit Includes 3 & 4
	PEN777071331	77707-1331	x				LP to Natural Conversion Kit Includes 3 & 4
	PEN777071311	77707-1311			x		LP to Natural Conversion Kit Includes 3 & 4
	PENU9370	U9-370	x	x	x	4	Gas Orifice O-ring
	PEN777070251	77707-0251	x			5	Combustion Blower Kit 200K NA
	PEN777070252	77707-0252		x		5	Combustion Blower Kit 333K NA
	PEN777070253	77707-0253			x	5	Combustion Blower Kit 400K NA
	PEN777070254	77707-0254	x			5	Combustion Blower Kit 200K LP
	PEN777070255	77707-0255		x		5	Combustion Blower Kit 333K LP
	PEN777070256	77707-0256			x	5	Combustion Blower Kit 400K LP
	PEN777070091	77707-0091	x			6	Air Orifice - Inlet Mixing Tube
	PEN420010094S	42001-0094S	x	x	x	7	Endcap Mixing Tube Grill
	PEN777070011	77707-0011	x	x	x		Blower/Adapter Plate Gasket Kit (Includes 8, 9, 10, 12)
	PEN777070202	77707-0202	x				Flameholder Kit Includes 10, 11, 12
	PEN777070203	77707-0203		x			Flameholder Kit Includes 10, 11, 12
	PEN777070204	77707-0204			x		Flameholder Kit Includes 10, 11, 12
	PEN420010075	42001-0075	x	x	x	13	Flameholder Insulation Cap
	PEN777070002	77707-0002	x	x	x	14	Upper RH Heater Enclosure Kit
	PEN420010001S	42001-0001S	x	x	x	17	Lower Enclosure
	PEN777070007	77707-0007	x	x	x	18	Upper Enclosure Fastener Kit
	PEN777073200N	77707-3200N	x			19	Upper LH Heater Enclosure Kit-Natural
	PEN777073333N	77707-3333N		x		19	Upper LH Heater Enclosure Kit-Natural
	PEN777073400N	77707-3400N			x	19	Upper LH Heater Enclosure Kit-Natural
	PEN777070008	77707-0008	x	x	x		Kaowool Insulation Kit (Includes 15, 23, 24, 25, 26)
	PEN420010074S	42001-0074S	x	x	x		Lower Enclosure Insulation
	PEN420020005S	42002-0005S	x	x	x	28	Metal Vent Cover

For Newer Heaters with Date Codes of (LO5) November 2005 and up

White blower cap included

	PEN777071461	77707-1461	x			28	Natural to LP Conversion Kit for newer heaters
	PEN777071451	77707-1451		x		28	Natural to LP Conversion Kit for newer heaters
	PEN777071441	77707-1441			x	28	Natural to LP Conversion Kit for newer heaters
	PEN777071431	77707-1431	x			28	LP to Natural Conversion Kit for newer heaters
	PEN777071421	77707-1421		x		28	LP to Natural Conversion Kit for newer heaters
	PEN777071411	77707-1411			x	28	LP to Natural Conversion Kit for newer heaters

All items cataloged are normally stocked unless noted.
◆ Not Stocked ✻ While Supplies Last

QUALITY POOL SUPPLY

Code	New Product Number	Old Product Number	Description
			Laars Heater Parts
*	JNDR0050800	R508	S-708 Header Gaskets (18 on a card)
	JNDR0011500	R115	S-692 Flow Control Disk - for EG
*	ZODR127	R127	E-771, E331 High Limit Switch, 150° for DB, DC, & DF
	JNDR0012200	R122	Fusible Link (each)
	JNDR0058200	R582	E-971 Thermostat for DM, DR, EG, EPG
*	ZODR133	R133	E-178 Thermostat for AFJ, CP-11, DB
	ZODR107	R107	E-945 Thermostat Knob (each)
*	ZODR561	R561	S-985 Front Header for DM
*	ZODR572	R572	S-673 Front Header for DR
	ZODR584	R584	S-686 Front Header for EG (104519-01)
	ZODR583	R583	S-688 Rear Header for EG, DM & DR (4521-01)
	JNDR0021100	R211	S-531/S-280 1½" Flange Gaskets (2) Compression type gaskets with sleeves
*	ZODF317	F-317	Flange Bolts
*	ZODW162	W-162	Visoflame Tube

All items cataloged are normally stocked unless noted.

Not Stocked * While Supplies Last

INDEX

Applied Biochemists 246
Bromine 243
Bulk Chemicals 270
CCH Sanitation System 247
Coral Seas 267
CuLator 267
GLB 248
Haviland Durachlor 242
Ideal 232
Jack's Magic 264
Leisure Time 253
Liquid Chlorine - Muriatic Acid 231
Nature² 263
Natural Chemistry 256
Ocean Breeze 245
PoolRx 267
Pond Chemicals 269
ProTeam 234
Robarb (Super Blue, Wipe Out) 267
Salt Support 245
SeaKlear 266
Spa Essentials 240
SpaPure 255
Splash Bagged Balancers 241
Ultima 252

New Product Number	Old Product Number	Description
	Liquid Chlorine - 12.5% Sodium HypoChlorite *Sold by the case (4 gallons per case) - 48 Cases per Pallet*	
PCHLC125	LC	Ohio
PCHLCM	LCM	Michigan
	Muriatic Acid - 31.45% Hydrochloric Acid *Sold by the case (4 gallons per case) - 48 Cases per Pallet*	
PCHMURIATIC	MURIATIC	Ohio
PCHMURIATICM	MURIATICM	Michigan

QUALITY POOL SUPPLY

IDEAL POOL PRODUCTS

www.IdealPoolCare.com

Dosage Rates • MSDS Sheets • Pool Care Guide • FAQ

BRICK AND MORTAR NO INTERNET SALES

Code	New Product Number	Old Product Number	Case	Size	Description
Chlorine					
	HAVC002283CS20B2	Q202	12	2 lb.	Granular Dichlor 62%
	HAV72168432	Q204	8	4 lb.	Granular Dichlor 62%
	HAVC002283CS74C1	Q210	4	10 lb.	Granular Dichlor 62%
	HAVC002283PL25	Q225	1	25 lb.	Granular Dichlor 62%
	HAV72135032	Q250	1	50 lb.	Granular Dichlor 62%
	HAV72214132	Q110	4	10 lb.	1" Trichlor Tabs
	HAV72212532	Q125	1	25 lb.	1" Trichlor Tabs
	HAV72215032	Q150	1	50 lb.	1" Trichlor Tabs
	HAV72234132	Q310	4	10 lb.	3" Trichlor Tabs
	HAVC002354PL25	Q325	1	25 lb.	3" Trichlor Tabs
	HAVC002354PL50	Q350	1	50 lb.	3" Trichlor Tabs
Shocks					
	HAVC006568CS20P5	Q968	12	1 lb.	Ideal True Shock 68% (Calcium Hypochlorite Blend)
	HAVC002457CS20P5	Q930	12	1 lb.	Non-Chlorine Shock (Potassium Monopersulphate)
	HAV7242532	Q93025	1	25 lb.	Non-Chlorine Shock (Potassium Monopersulphate)
	HAVC004945CS20P5	Q973	12	1 lb.	Super Shock 73% (Calcium Hypochlorite)
	HAVC005322CS20P5	Q941	12	1 lb.	Multi Shock Extra (Sodium Dichloro-S-Triazinetrione Blend)

All items cataloged are normally stocked unless noted.

Not Stocked ✻ While Supplies Last

www.IdealPoolCare.com

Dosage Rates • MSDS Sheets • Pool Care Guide • FAQ

IDEAL POOL PRODUCTS

Balancers

Code	New Product Number	Old Product Number	Case	Size	Description
	HAVC002642CS20B2	Q802	12	2 lb.	Cyanuric Acid Stabilizer
	HAVC002642CS74C1	Q810	4	10 lb.	Cyanuric Acid Stabilizer
	HAVC002642PPL25	Q825	1	25 lb.	Cyanuric Acid Stabilizer
	HAVC002553CS20B	Q602	12	2 lb.	pH Increaser
	HAVC002553CS77C2	Q605	8	5 lb.	pH Increaser
	HAVC002553PL20	Q620	1	20 lb.	pH Increaser
	HAVC002553PL50	Q650	1	50 lb.	pH Increaser
	HAVC002600CS20B4	Q803	12	3 lb.	pH Reducer
	HAVC002600CS77C2	Q805	8	5 lb.	pH Reducer
	HAVC002600CS74C2	Q814	4	14 lb.	pH Reducer
	HAVC002600PL50	Q851	1	50 lb.	pH Reducer
	HAVC002671CS77C2	Q705	8	5 lb.	Total Alkalinity Increaser
	HAVC002671CS74C1	Q710	4	10 lb.	Total Alkalinity Increaser
	HAVC002671PL25	Q725	1	25 lb.	Total Alkalinity Increaser
	HAVC002671PL50	Q750	1	50 lb.	Total Alkalinity Increaser
	HAVC002712CS74C1	Q610	4	10 lb.	Hardness Increaser
	HAVC002712PL25	Q625	1	25 lb.	Hardness Increaser
	HAVC002712PL50	Q651	1	50 lb.	Hardness Increaser
	HAVC005667CS74Q1	Q870	4	10 lb.	Borate Plus
	HAVC005667PL20	Q875	1	20 lb.	Borate Plus

Algaecides

	HAVC003064CS20Q	Q530 *(Limited Supply for 2022)*	12	1 qt.	Algaecide 30
	HAVC003065CS20Q	Q560 *(Limited Supply for 2022)*	12	1 qt.	Algaecide 60
	HAVC003126CS20Q	Q520	12	1 qt.	Algae Killer (Copper)

Troubleshooters

	HAVC003164CS20Q	Q800	12	1 qt.	Water Clarifier
	HAVC003368CS20Q	Q820	12	1 qt.	Super Clarifier
	HAVC002770CS20Q	Q830	12	1 qt.	Filter Cleaner
	HAVC002886CS20Q	Q840	12	1 qt.	Stain & Scale Magic
	HAVC003263CS20Q	Q850	12	1 qt.	Tile & Vinyl Cleaner
	HAVC005666CS20Q	Q860	12	1 qt.	Heavy Floc
	HAV774301	Q001			Water Sample Bottle

All items cataloged are normally stocked unless noted.

Not Stocked ✻ While Supplies Last

QUALITY POOL SUPPLY

ProTeam®

Haviland POOL AND SPA PRODUCTS

Chlorine & Bromine

Code	New Product Number	Old Product Number	Case	Size	Description
	HAVC002417CS20B2	2212268	12	2 lb.	1" Pure Trichlor Tabs
✻	HAVC002417CS77C2	2218568	8	5 lb.	1" Pure Trichlor Tabs
	HAVC002417CS74C3	2214868	4	8 lb.	1" Pure Trichlor Tabs
	HAVC002417PL25	2212568	1	25 lb.	1" Pure Trichlor Tabs
	HAVC002419CS74C3	22W4868	4	8 lb.	3" Pure Trichlor Tabs
	HAVC002419PL25	22W2568	1	25 lb.	3" Pure Trichlor Tabs
	HAVC002419PL50	22W5068	1	50 lb.	3" Pure Trichlor Tabs
	HAVC002418CS77C2	22H38568	8	5 lb.	3" High Tech Trichlor Tabs
	HAVC002418PL25	22H32568	1	25 lb.	3" High Tech Trichlor Tabs
	HAVC002418PL50	22H35068	1	50 lb.	3" High Tech Trichlor Tabs
✻	HAVC002420CS77C2	22S8568	8	5 lb.	Pure Stix
	HAVC002420PL25	22S2568	1	25 lb.	Pure Stix
	HAVC002420PL50	22S5068	1	50 lb.	Pure Stix
	HAVC002321CS20P5	2151268	12	2 lb.	Zip Chlor Granular Dichlor
	HAVC002322CS77C1	2158468	8	4 lb.	Zip Chlor Granular Dichlor
	HAVC002322CS74C3	2154868	4	8 lb.	Zip Chlor Granular Dichlor
	HAVC002322PL16	2151668	1	16 lb.	Zip Chlor Granular Dichlor
	HAVC002322PL25	2152568	1	25 lb.	Zip Chlor Granular Dichlor
	HAVC002515PL50	255068	1	50 lb.	1" Bromine Tabs

All items cataloged are normally stocked unless noted.

Not Stocked ✻ While Supplies Last

ProTeam®

Haviland POOL AND SPA PRODUCTS

Code	New Product Number	Old Product Number	Case	Size	Description
Shocks					
	HAVC006401CS20P5	C006401-CS20P6	12	1 lb.	Power 68 Shock (Calcium Hypochlorite)
	HAVC004807CS20P5	Power73	12	1 lb.	Power 73 Shock (73% Calcium Hypochlorite)
	HAVC005323CS20P5	C005211-CS20P5	12	1 lb.	Multi Magic Shock Extra (Dichlor Blend with 35% Available Chlorine)
*	HAVC002533CS77C2	278568	8	5 lb.	Power Magic Super Oxidizer
	HAVC002486CS20P5	73740	12	1 lb.	Shock & Swim (70% Potassium Monopersulfate)
	HAVC002486PL50	245068	1	50 lb.	Shock & Swim (70% Potassium Monopersulfate)
	HAVC002319CS20P5	73964Q	12	1 lb.	Quick Shock Dichlor (56% Available Chlorine)
Algaecides					
	HAVC002871CS20B2	3822268	12	2 lb.	Mustard & Black Magic Dry
	HAVC002871CS3006	73712	30	6 oz.	Mustard & Black Magic Dry
	HAVC003036CS20Q	512Q68	12	1 qt.	Prevent (50% Quat Algaecide)
	HAVC003792CS20Q	C003792-CS20Q *(Limited Supply for 2022)*	12	1 qt.	Polyquat 30
	HAVC003098CS20Q	523Q68 *(Limited Supply for 2022)*	12	1 qt.	Polyquat 60
	HAVC003143CS20Q	54Q68A	12	1 qt.	Severest Algae Treatment (Copper-Based Algaecide)

All items cataloged are normally stocked unless noted.

Not Stocked * While Supplies Last

QUALITY POOL SUPPLY

ProTeam

Haviland POOL AND SPA PRODUCTS

Code	New Product Number	Old Product Number	Case	Size	Description
Balancers					
	HAVC002586CS20P5	3124168A	12	1 lb.	pH Up
	HAVC002586CS77C2	318568	8	5 lb.	pH Up
	HAVC002586CS74C1	3141068	4	10 lb.	pH Up
	HAVC002585CS20B4	3212368	12	3 lb.	pH Down
	HAVC002585CS74C1	3241068	4	10 lb.	pH Down
	HAVC002697CS77C2	348568	8	5 lb.	Alkalinity Up
	HAVC002697CS74C1	3441068	4	10 lb.	Alkalinity Up
	HAVC002697PL25	342568	1	25 lb.	Alkalinity Up
	HAVC002735CS77C1	358468	8	4 lb.	Calcium Up
	HAVC002735CS74C1	3541068	4	10 lb.	Calcium Up
	HAVC002735PL25	352568	1	25 lb.	Calcium Up
Troubleshooters					
	HAVC005930CS1018	C005930-CS1018	10	18 oz.	Metal Magic Spot Chalk
	HAVC005136PL20	C005136-PL20	1	20 lb.	Pool Rescue - High powered oxidizer that brings debris to surface
	HAVC003242CS20Q	57Q68	12	1 qt.	Metal Magic
	HAVC002864CS20X6	73741	20	6 oz.	Dry Clarifier
	HAVC003197CS20Q	56Q68	12	1 qt.	Microfloc Clarifier
	HAVC003359CS20Q	C003862-CS20Q	12	1 qt.	Cover Cleaner
	HAVC003413CS20Q	601Q68	12	1 qt.	Filter Magic
	HAVC003273CS20Q	58Q68	12	1 qt.	Tile & Vinyl Cleaner
	HAVC005152CS20Q	C005152-CS20Q	12	1 qt.	Phosaway Extreme
	HAVC002905CS20Q	4312Q68	12	1 qt.	Phosaway
✻	HAVC003418CS20P1	73824	10	2 lb.	Zapzit

All items cataloged are normally stocked unless noted.

Not Stocked ✻ While Supplies Last

ProTeam®

BORATES MAKE IT BETTER

Haviland
POOL AND SPA PRODUCTS

ProteamPoolCare.com

SPOT STAIN CHALK

SCRUB AWAY STAINS ONCE AND FOR ALL

EASY TO USE INSTANT RESULTS

Place this reusable puck on stubborn stains to lighten and remove tough spots and easily scrub off the rest. Works on surface stains above and below the water.

STAIN DROP®

POOLSTAINDROP.COM

Haviland
POOL AND SPA PRODUCTS

ProTeam

Haviland POOL AND SPA PRODUCTS

Code	New Product Number	Old Product Number	Case	Size	Description
Enhancers					
	HAVC002873CS74C1	3841068	4	10 lb.	Supreme
	HAVC002873PL20	382068	1	20 lb.	Supreme
	HAVC002873PL45	384568	1	45 lb.	Supreme
	HAVC002534CS74C1	3841068P	4	10 lb.	Supreme Plus
	HAVC002534PL20	382068P	1	20 lb.	Supreme Plus
	HAVC002534PL45	384568P	1	45 lb.	Supreme Plus
	HAVC002875CS20B2	3812268	12	2 lb.	Weekly Treat
	HAVC003414CS20Q	609Q68	12	1 qt.	Power Enzyme
	HAVC002658CS20B1	3312568	12	1.5 lb.	UV Shield Stabilizer
	HAVC002658CS74C3	334868	4	8 lb.	UV Shield Stabilizer
Kits					
✻	HAVC0036461EA	73743	1	Kit	Supreme Start Up Kit 10K

All items cataloged are normally stocked unless noted.

Not Stocked ✻ While Supplies Last

QUALITY POOL SUPPLY

Haviland POOL AND SPA PRODUCTS

ProTeam spa

Spa Products

Once you experience the borate technology of ProTeam Spa, you'll never go back. Softer water and easier maintenance.

Code	New Product Number	Old Product Number	Case	Size	Description
	HAVC003951CS20B2	3812S68	12	2 lb.	Gentle Spa
	HAVC003949CS40P	3949-CS40P	12	1 pt.	Natural Clean
	HAVC003950CS40P	3950-CS40P	12	1 pt.	Filter Clean (Enzyme Based)
	HAVC003948CS40P	3948-CS40P	12	1 pt.	Surface Clean (Enzyme Based)
	HAVC005212CS20B2	C005212-CS20B2	12	2 lb.	Spa Multi Magic Shock Extra (Sodium Dichloro-S-Triazinetrione)
	HAVC003938CS20B3	2412268	12	2 lb.	Shock
	HAVC003938CS77C2	2441S68	8	5 lb.	Shock
	HAVC003937CS20P5	2152168	12	1 lb.	Granular Dichlor
	HAVC003937CS20B2	2152268	12	2 lb.	Granular Dichlor
	HAVC003937CS77C1	2158S68	8	4 lb.	Granular Dichlor
	HAVC003936CS20B1	2512168	12	1.5 lb.	1" Brominating Tabs
	HAVC003936CS77C1	258468	8	4 lb.	1" Brominating Tabs
	HAVC003957CS40P	38P68	12	1 pt.	Brom Start (Liquid)
	HAVC003947CS40P	56P68	12	1 pt.	Sky Blue Clarifier
	HAVC003946CS40P	59P68	12	1 pt.	Foam Fighter
	HAVC003941CS20P5	3941-CS20P5	12	1 lb.	pH Increaser
	HAVC003942CS20B1	3942-CS20B1	12	1.5 lb.	pH Decreaser
	HAVC003943CS20P5	3412168	12	1 lb.	Alkalinity Up
	HAVC003943CS20B2	3412268	12	2 lb.	Alkalinity Up
	HAVC003944CS20P5	3512168	12	1 lb.	Calcium Up
	HAVC003945CS40P	57P68	12	1 pt.	Metal Magic
	HAVC003945CS20Q	57QS68	12	1 qt.	Metal Magic
✻	HAVC0036451EA	73744	4		Deluxe Spa Kit Includes: Gentle Spa, pH Increaser, pH Decreaser, Super Clean, Filter Cleaner, Sky Blue Clarifier, Metal Magic, Bottle of Test Strips, Water Sample Bottle.

All items cataloged are normally stocked unless noted.

Not Stocked ✻ While Supplies Last

Bagged Water Balancing Products

Conveniently packaged for swimming pool retail locations, these pouches will make a great addition to your assortment of swimming pool products!

Code	New Product Number	Old Product Number	Case	Size	Description
	BKIPSA2	PSA2	12	2 lb.	pH Plus (Soda Ash)
	BKIPSA5	PSA5	8	5 lb.	pH Plus (Soda Ash)
	BKIPSA10	PSA10	4	10 lb.	pH Plus (Soda Ash)
	BKIPSA25	PSA25	1	25 lb.	pH Plus (Soda Ash)
	BKIPSS2	PSS2	12	2 lb.	pH Minus (Sodium Bisulphate)
	BKIPSS5	PSS5	8	5 lb.	pH Minus (Sodium Bisulphate)
	BKIPSS10	PSS10	4	10 lb.	pH Minus (Sodium Bisulphate)
	BKIPSS25	PSS25	1	25 lb.	pH Minus (Sodium Bisulphate)
	BKIPCYA2	PCYA2	12	2 lb.	Conditioner (Cyanuric Acid)
	BKIPCYA5	PCYA5	8	5 lb.	Conditioner (Cyanuric Acid)
	BKIPCYA8	PCYA8	4	8 lb.	Conditioner (Cyanuric Acid)
	BKIPSC5	PSC5	8	5 lb.	Alkalinity Plus (Sodium Bicarbonate)
	BKIPSC10	PSC10	4	10 lb.	Alkalinity Plus (Sodium Bicarbonate)
	BKIPSC25	PSC25	4	25 lb.	Alkalinity Plus (Sodium Bicarbonate)
	BKIPCC4	PCC4	8	4 lb.	Hardness Plus (Calcium Chloride)
	BKIPCC8	PCC8	4	8 lb.	Hardness Plus (Calcium Chloride)
	BKIPCC20	PCC20	1	20 lb.	Hardness Plus (Calcium Chloride)

All items cataloged are normally stocked unless noted.

Not Stocked ✻ While Supplies Last

QUALITY POOL SUPPLY

Durachlor Pool Products

Code	New Product Number	Old Product Number	Case	Size	Description
		Chlorine			
	HAVC003610CS20B2	2161213	12	2 lb.	Granular Dichlor 62%
	HAVC003610CS77C1	2168413	8	4 lb.	Granular Dichlor 62%
	HAVC003610CS74C1	2164113	4	10 lb.	Granular Dichlor 62%
	HAVC003610PL25	2162513	1	25 lb.	Granular Dichlor 62%
	HAVC003610PL50	2165013	1	50 lb.	Granular Dichlor 62%
	HAVC002350CS20B2	2212213	12	2 lb.	1" Trichlor Tabs
	HAVC002350CS74C1	2214113	4	10 lb.	1" Trichlor Tabs
	HAVC002350PL25	2212513	1	25 lb.	1" Trichlor Tabs
	HAVC002350PL50	2215013	1	50 lb.	1" Trichlor Tabs
	HAVC002351CS74C1	2234113	4	10 lb.	3" Trichlor Tabs
	HAVC002351PL25	2232513	1	25 lb.	3" Trichlor Tabs
	HAVC002351PL50	2235013	1	50 lb.	3" Trichlor Tabs
CALL	HAVC002349PL25	22S2513	1	25 lb.	Sticks Trichlor (Stocked in Clio only)
CALL	HAVC002352CS20B2	22G2213	12	2 lb.	Super 90 (Granular TriChlor)
		Balancers			
	HAVC002641CS20P2	3324113	24	1 lb.	Stabilizer
	HAVC002641CS20B2	3312213	12	2 lb.	Stabilizer
	HAVC002641CS77C1	338413	8	4 lb.	Stabilizer
	HAVC002641CS74C1	3341013	4	10 lb.	Stabilizer
	HAVC002552CS20B2	3112213	12	2 lb.	pH Increaser
	HAVC002552CS77C2	318513	8	5 lb.	pH Increaser
	HAVC002552CS74C1	3141013	4	10 lb.	pH Increaser
	HAVC002552PL50	315013	1	50 lb.	pH Increaser
	HAVC002599CS74C2	3241413	4	14 lb.	pH Reducer
	HAVC002599CS20B4	3212313	12	3 lb.	pH Reducer
	HAVC002599CS77C2	328513	8	5 lb.	pH Reducer
	HAVC002599PL25	322513	1	25 lb.	pH Reducer
	HAVC002599PL50	325013	1	50 lb.	pH Reducer
	HAVC002669CS77C2	348513	8	5 lb.	Total Alkalinity Increaser
	HAVC002669CS74C1	3441013	4	10 lb.	Total Alkalinity Increaser
	HAVC002669PL25	342513	1	25 lb.	Total Alkalinity Increaser
	HAVC002669PL50	345013	1	50 lb.	Total Alkalinity Increaser
	HAVC002711CS74C1	3541013	4	10 lb.	Water Hardness Increaser
	HAVC002711PL25	352513	1	25 lb.	Water Hardness Increaser
	HAVC002711PL50	355013	1	50 lb.	Water Hardness Increaser
	HAVC002833CS20B2	3832213	12	2 lb.	Chlorine Neutralizer

All items cataloged are normally stocked unless noted.

Not Stocked ✻ While Supplies Last

Durachlor Pool Products

Code	New Product Number	Old Product Number	Case	Size	Description
	Shocks				
	HAVC005321CS20P5	C005213-CS20P5	12	1 lb.	Multi Shock Extra (Sodium Dichloro-S-Triazinetrione Blend)
	HAVC006400CS20P5	C006400-CS20P5	12	1 lb.	Assault 68 (68% Calcium Hypocholrite)
	HAVC004809CS20P5	Assault73	12	1 lb.	73% Cal-Hypo Shock
	HAVC002456CS20P5	65573	12	1 lb.	Wipe Out Shock
	HAVC002456CS20B3	2412313	12	2.2 lb.	Wipe Out Shock
	HAVC002456PL25	242513	1	25 lb.	Wipe Out Shock
	HAVC002456PL50	245013	1	50 lb.	Wipe Out Shock
CALL	HAVC002282CS20P5	73515Q	12	1 lb.	Di-Chlor Quick Shock
	Algaecides				
	HAVC003007CS20Q	512Q13	12	1 qt.	Algae Kil 50 (50% Quat)
	HAVC003125CS20Q	54Q13 *(Limited Supply for 2022)*	12	1 qt.	Algae Kil CB7 (7% Copper)
	HAVC003061CS20Q	522Q13 *(Limited Supply for 2022)*	12	1 qt.	Combat 30 (30% Poly)
	HAVC003062CS20Q	523Q13	12	1 qt.	Combat 60 (60% Poly)
	HAVC002909CS20Q	44Q13	12	1 qt.	Combat Extra (20% Poly, 2% Copper)
	Troubleshooters				
	HAVC002902CS20Q	4312Q13	12	1 qt.	Phosaway
	HAVC003222CS20Q	57Q13	12	1 qt.	Rust & Scale Control
	HAVC003163CS20Q	562Q13	12	1 qt.	Concentrated Clarifier
	NSQPS00000000020	373Q13	12	1 qt.	Liquid Filter Cleaner
	HAVC003360CS20Q	C003360-CS20Q	12	1 qt.	Metal Wizard
	Bromine				
	HAVC002498PL50	255013	1	50 lb.	Ultra Brom Bromine 1" Tabs

All items cataloged are normally stocked unless noted.

Not Stocked ✻ While Supplies Last

QUALITY POOL SUPPLY

Code	New Product Number	Old Product Number	Case	Size	Description

Activator Borate Products

Borates keep water balanced, keep filters clear, and some borates are approved by the EPA to prevent algae. Adding borates will help to keep your water balanced and allow you to maintain a lower chlorine residual.

For more information go to:
https://www.havilandpool.com/pages/borates-make-it-better

Activator PLUS

- Reduces eye and skin irritation
- Improves water clarity
- Helps maintain better water balance
- Gives the water a soft and silky feel
- Reduces eye and skin irritation

	HAVC002832PL20	3820P13	1	20 lb.	Activator PLUS with Water Balancers
	HAVC002832PL45	3845P13	1	45 lb.	Activator PLUS with Water Balancers

Activator

- Reduces eye and skin irritation
- Improves water clarity
- Prevents algae
- One-per-season-application

*	HAVC002831CS77C2	3885B13	8	5 lb.	Activator
*	HAVC002831CS74C1	38410B13	4	10 lb.	Activator
	HAVC002831PL20	C002831-PL20	1	20 lb.	Activator
	HAVC002831PL45	C002831-PL45	1	45 lb.	Activator

All items cataloged are normally stocked unless noted.
Not Stocked * While Supplies Last

Code	New Product Number	Old Product Number	Case	Size	Description
					Salt Pool Chemicals
					Salt Support's innovative products ensure that the salt you put into your pool doesn't create problems you have to take out later.
	HAVC004869CS20P5	C004869-CS20P5	12	1 lb.	Salt Cell Cleaner
	HAVC004862PL25	C004862-PL25	1	25 lb.	System Start
	HAVC004862CS74C1	C004862-CS74C1	4	10 lb.	System Start
	HAVC004873CS20Q	C004873-CS20Q	12	1 qt.	Metal Miracle
	HAVC004867CS20B2	C004867-CS20B2	12	2 lb.	Weekly Boost
	HAVC004871CS20Q	C004871-CS20Q	12	1 qt.	Weekly Clean
					Ocean Breeze Salt Support
					Extends the life of chlorine generator cells
*	HAVC002889CS20Q	4056Q13	12	1 qt.	Micro Clean

All items cataloged are normally stocked unless noted.
Not Stocked ✻ While Supplies Last

QUALITY POOL SUPPLY

Code	New Product Number	Old Product Number	Case	Size	Description
APPLIED BIOCHEMISTS® Advantis		**Algaecides**			
	LZA406103A	6103	12	1 qt.	**Swimtrine-Plus Algaecide** Highly concentrated. Effectively and economically kills green and mustard algae without requiring pool closing. Prevents regrowth. Only 1.5 ounces treats up to 10,000 gallons!
	LZA406503A	6503	12	1 qt.	**Algaetrine Algaecide** Formulated to kill and control green and mustard algae without requiring pool closing.
	LZA406303A	6303	12	1 qt.	**Black Algaetrine Algaecide** Kills the really tough one, black algae, on pool floors, walls and corners. No waiting to use pool - swim immediately.
	LZA407303A	7303	12	1 qt.	**Pooltrine 60 Algaecide** Concentrated, non-foaming polymer algaecide. Treats & prevents all types of green algae while increasing water clarity. Especially effective in shadowed or indoor pools. No waiting to swim.
APPLIED BIOCHEMISTS® Advantis		**Stain & Scale Control**			
	LZA406704A	6704	12	1 qt.	**Staintrine Mineral Control** Prevents and removes metal stains and scale. Chelate and sequester iron/copper and other minerals.

All items cataloged are normally stocked unless noted.

Not Stocked ✻ While Supplies Last

Code	New Product Number	Old Product Number	Case	Size	Description
					Clarifiers
	LZA407803A	7803	12	32 oz.	**Gold-N-Clear Water Brightener** (Replaces Cleartrine) Clears cloudy pool water caused by organic matter such as oil & dirt.
					Pool Maintenance Products
	LZA401115A	1115	12	20 oz.	**THIO - Trine** Chlorine Neutralizer. 8 oz. removes 4 ppm chlorine or bromine in 15,000 gallons of water.
	LZA409704A	9704	4	1 ga.	**No Foam** Commercial Defoamer for Spas
					CCH® Endurance System Commercial Pool & Spa Water Sanitation System www.cchendurance.com
	CCH73100	CCH73100			CCH® Endurance Feeder System
	CCH23227	CCH23227			CCH® Endurance 25 lb. Tabs 36/Skid

All items cataloged are normally stocked unless noted.
Not Stocked ✻ While Supplies Last

QUALITY POOL SUPPLY

Sanitizers

Code	New Product Number	Old Product Number	Case	Size	Description
	LZA71001A	71001	24	1 lb.	Granular Chlorine (56% Dichlor)
✻	LZA71220A	71220	4	8 lb.	Granular Chlorine (56% Dichlor)
CALL	LZA71222A	71222	1	25 lb.	Granular Chlorine (56% Dichlor)
CALL	LZA71222A	71224	1	50 lb.	Granular Chlorine (56% Dichlor)
	LZA71250A	71250	12	2 lb.	1" Chlorine Tabs (99% Trichlor)
	LZA71234A	71234	1	25 lb.	3" Chlorinating Tabs (99% Trichlor)

Shock Treatments

Code	New Product Number	Old Product Number	Case	Size	Description
	LZA71428A	71428	24	1 lb.	Super Charge (68% Cal-Hypo Shock) (bag)
	LZA71430A	71430	1	25 lb.	Super Charge (68% Cal-Hypo Shock)
	LZA71432A	71432	1	100 lb.	Super Charge (68% Cal-Hypo Shock)
CALL	LZA71675A	71675	1	40 lb.	SHOXIDIZER multi-functional shock
	LZA71416A	71416	12	2.2 lb.	Oxy-Brite Non Chlorine Shock (Potassium Monopersulfate)
	LZA71418A	71418	6	5 lb.	Oxy-Brite Non Chlorine Shock (Potassium Monopersulfate)
	LZA71240A	71420	2	20 lb.	Oxy-Brite Non Chlorine Shock (Potassium Monopersulfate) (Sold By Case Only)
✻	LZA71442A	71422	1	1 lb.	Oxy-Brite Non Chlorine Shock (50 lb Pail) (Potassium Monopersulfate)
	LZA71442A	71442	24	1 lb.	Supersonic (73% Cal-Hypo Shock)
CALL	LZA71440A	71440	1	25 lb.	Supersonic (73% Cal-Hypo Shock)

All items cataloged are normally stocked unless noted.

Not Stocked ✻ While Supplies Last

Balancers

Code	New Product Number	Old Product Number	Case	Size	Description
✻	LZA71265A	71265	12	1.75 lb.	Stabilizer
	LZA71257A	71257A	12	1.75 lb	Stabilizer - Bag
	LZA71259A	71259A	8	4 lb.	Stabilizer - Bag
✻	LZA71268A	71268	2	10 lb.	Stabilizer
	LZA71258A	71258A	4	8 lb.	Stabilizer - Bag
✻	LZA71244A	71244	12	2 lb.	pH Up
	LZA71254A	71254A	12	2 lb.	pH Up - Bag
	LZA71255A	71255A	4	8 lb.	pH Up - Bag
✻	LZA71238A	71238	12	2 lb.	pH Down
	LZA71252A	71252A	12	2.5 lb.	pH Down - Bag
✻	LZA71240A	71240	9	4 lb.	pH Down
	LZA71241A	71241A	8	6 lb.	pH Down - Bag
✻	LZA71242A	71242	4	10 lb.	pH Down
	LZA71253A	71253A	4	10 lb.	pH Down - Bag
✻	LZA71202A	71202	4	7.5 lb.	Alkalinity Up
	LZA71245A	71245A	4	10 lb.	Alkalinity Up - Bag
✻	LZA71203A	71203	1	25 lb.	Alkalinity Up
✻	LZA71210A	71210	4	6 lb.	Calcium Hardness Up
	LZA71243A	71243	4	8 lb.	Calcium Hardness Up - Bag
	LZA71251A	71251A	1	15 lb.	Calcium Hardness Up - Bag
	LZA71214	71214	1	25 lb.	Calcium Hardness Up

Clarifiers

	LZA71205	71205	12	1 qt.	Super Blue
	LZA71408A	71408	12	1 qt.	Drop N' Vac Liquid Flocking Agent
	LZA71410A	71410	12	1 qt.	Natural Clear Clarifier

All items cataloged are normally stocked unless noted.
Not Stocked ✻ While Supplies Last

QUALITY POOL SUPPLY

Code	New Product Number	Old Product Number	Case	Size	Description
		Stain Control			
	LZA71016A	71016	12	1 qt.	Sequa-Sol Stain & Mineral Control
	LZA71018A	71018	4	1 ga.	Sequa-Sol Stain & Mineral Control
	LZA71024A	71024	12	2 lb.	Super Sequa-Sol Stain & Mineral Control
	LZA71020A	71020	12	2.5 lb.	Stain Magnet
		Algaecides			
	LZA71102A	71102	12	1 qt.	Algimycin 1000 Poly Complex Blend
	LZA71104A	71104	12	1 qt.	Algimycin 2000 Poly Complex Blend
	LZA71106A	71106	4	1 ga.	Algimycin 2000 Poly Complex Blend
	LZA71108A	71108	12	1 qt.	Algimycin 600 Poly 60%
	LZA71114A	71114	12	1 qt.	Strike Out 7.4% Copper Algaecide
✻	LZA71116A	71116	4	1 ga.	Strike Out 7.4% Copper Algaecide
	LZA71100A	71100	12	1 qt.	Algae-X 30% Poly
	LZA71118A	71118	12	1 qt.	Vanquish - Treats Pink Slime/Mold
		Cleaners			
	LZA71028A	71028	12	1 qt.	TLC Surface Cleaner
	LZA71030A	71030	4	1 ga.	TLC Surface Cleaner
	LZA71006A	71006	12	2 lb.	Filter Cleanse Granular (Cleans grease, oils, and scale)
	LZA71010A	71010	12	1 qt.	Filter Fresh Cartridge Filter Soak
✻	LZA71014A	71014	12	1 qt.	Filter Rinse Backwashing Aid for Sand Filters
	LZA71004A	71004	12	1 qt.	Cover Care Winter or Solar Cover Cleaner

All items cataloged are normally stocked unless noted.

Not Stocked ✻ While Supplies Last

GLB™

With 60 years of expertise, GLB® is The Gold Standard In Pool Care—it gets the job done the right way, right away.

See our full range of products at GLBpool.com

2 TRUSTED BRANDS

2 BOLD NEW LOOKS

leisure TIME™

Leisure Time® allows you to Ease Into Simple Spa Care with time-tested formulas and distinctive style.

See all spa products at LeisureTime.com

Leisure Time® and the Leisure Time® logo are registered trademarks of Innovative Water Care, LLC or its affiliates. GLB® and the GLB® logo are registered trademarks of Innovative Water Care, LLC or its affiliates. ©2022 All rights reserved.

QUALITY POOL SUPPLY

Code	New Product Number	Old Product Number	Case	Size	Description
ULTIMA Advantis		**Pool and Spa Speciality Products**			
✻	LZA26286A	26286	40	1 lb.	**S.O.S. Shock**
	LZA27825A	27825	12	1 qt.	**Salt Solutions Cell Extend Algaecide** Scale control with enzymes, clarifiers and sequestering agents.
	LZA24726A	24726	6	3 lb.	**Total Control Copper Algaecide with Shock**
	LZA24948A	24948	6	½ ga.	**Enzyme Clarifier** A natural safe way to clean and clarify pool water. It breaks down organic materials that can cause scum rings.
✻	LZA25490A	25490	6	3 lb.	**Clean & Refresh** Removes oils and minerals from filters and ammonia from zeobrite.
✻	LZA26298A	26298	12	1 qt.	**X-Change** Convert biguanide pools without draining! X-Change converts biguanide-based pool sanitizing systems to chlorine sanitizer without draining the entire pool. The gradual conversion process allows continued pool use with little change in the water's appearance.
	LZA27836A	27836	12	1 qt.	**PhosFIGHT® Phosphate Remover**
	LZA26299A	26299	12	1 qt.	**SKIMMERsupport® clarifier** *(same formula as GLB Bug-Out)* SKIMMERsupport® clarifier reduces the water's surface tension to allow floating debris to drop to the pool bottom to be vacuumed away.
	LZA27832A	27832	20	Tubes	**Ultima Nano-Phos** - Tabs in a Tube The first phosphate remover in tablet form. For use in a skimmer. Each tablet contains a rare Earth salt blend that dissolves with much less clouding than with liquid.
AQUA SILK Advantis		**Chlorine-free & Bromine-free Pool Care**			
	LZA49900A	49000	4	½ ga.	**Aqua Silk Sanitizer** Makes your pool water feel softer and cleaner as well as controlling bacteria and algae.
	LZA49001A	49001	4	1 ga.	**Aqua Silk Free Shock Oxidizer** Contains a specially-stabilized hydrogen peroxide to clarify pool water.
✻	LZA49900A	49002	12	1 qt.	**Aqua Silk Algae Control** This powerful algaecide is effective against green, black and mustard algae as well as unsightly slime deposits.

All items cataloged are normally stocked unless noted.

Not Stocked ✻ While Supplies Last

Code	New Product Number	Old Product Number	Case	Size	Description
		Shocks and Sanitizers			
	LZA45425A	LT45	12	2.2 lb.	Brominating Tablets
	LZA45430A	LT47	6	4 lb.	Brominating Tablets
	LZA45435A	LT46	12	1.75 lb.	Brominating Granular
	LZARENU2	LT31	12	2.2 lb.	Renew Non-Chlorine Shock Granular (Potassium Monopersulfate)
	LZARENU5	LT40	6	5 lb.	Renew Non-Chlorine Shock Granular (Potassium Monopersulfate)
	LZA45305A	45305	12	1.75 lb.	Renew Non-Chlorine Shock - Tabs (Potassium Monopersulfate)
	LZA45300A	LT43	12	1 qt.	Reserve - Liquid Sodium Bromide
	LZA22337A	LT23	12	2 lb.	Spa Chlorine - Bottle (Spa 56)
	LZAE5	LT29	6	5 lb.	Spa Chlorine - Bottle (Spa 56)
	LZA23434A	LT21	12	16 oz.	Spa Mineral Purifier Cartridge Inserts into spa filter cartridge
	LZABE	LT34	16	2 oz.	Sodium Bromide - Box of Six 2 oz. Bags
	LZABE1	LT35	12	1 lb.	Sodium Bromide
		Clarifiers			
	LZAA	LT14	12	1 qt.	Spa Bright and Clear Clarifier
	LZASGQ	LT70Q	12	1 qt.	Enzyme - Prevent Oil & Scum Line
	LZAH	LT24	12	1 pt.	Spa Foam Down
	LZAHQ	LT24Q	12	1 qt.	Spa Foam Down
	LZAH1	LT24G	4	1 ga.	Spa Foam Down
		Stain & Scale			
	LZAB	LT20	12	1 qt.	Spa Defender - Enzyme treatment for scale control
	LZAD	LT22	12	1 pt.	Spa Metal-Gon
	LZA45440A	LT13	6		Spa Metal-Gon + Defender (2-pack)
✻	LZA45510A	LT93	12	1 qt.	Scale Control

All items cataloged are normally stocked unless noted.
Not Stocked ✻ While Supplies Last

QUALITY POOL SUPPLY

Code	New Product Number	Old Product Number	Case	Size	Description
		Balancers			
	LZA22339A	LT42	12	2 lb.	Spa Up
	LZA22338A	LT44	12	2.5 lb.	Spa Down
	LZAZIQ	LT80	12	1 qt.	Liquid Spa Down
	LZACB	LT25	12	1 qt.	Liquid Calcium Booster
	LZAPHB	LT27	12	1 qt.	pH Balance - Stabilizer
	LZA45410A	LT28	6	3 lb.	pH Balance Plus - Granular
	LZAALK	LT37	12	2 lb.	Spa Alkalinity Increase
		Cleaners			
	LZAS	LT49	12	1 pt.	Spa Instant Cartridge Clean
	LZAN	LT50	12	1 pt.	Spa Cartridge Filter Clean
	LZAO	LT51	12	1 qt.	Spa Cartridge Filter Clean
	LZA3192A	LT52	12	1 pt.	Cover Care and Conditioner
	LZA45450A	LT63	12	1 pt.	Spa Jet Clean
		Maintenance & Testing Products			
	LZAP	LT36	12	1 pt.	Spa Fast Gloss - (Acrylic Wax)
	LZAZJ	LT87	12	1 qt.	Leak Seal
✻	LZA45005A	LT82	12		Bromine Test Strips Tests Bromine, pH, Alkalinity, Calcium Hardness (50/bottle)
✻	LZA45010A	LT83	12		Chlorine Test Strips Tests Free Chlorine, pH, Alkalinity, Calcium Hardness (50/bottle)
	LZA45006A		12		Chlorine + Bromine Test Strips Tests Free Chlorine, Bromine, Alkalinity, pH, Total Hardness (50/bottle)

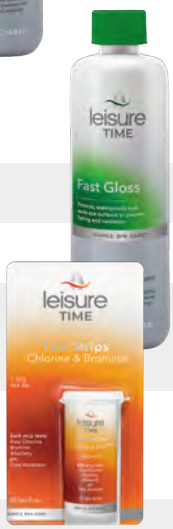

All items cataloged are normally stocked unless noted.

Not Stocked ✻ While Supplies Last

SPAPURE
Haviland
POOL AND SPA PRODUCTS

Spa Products

Code	New Product Number	Old Product Number	Case	Size	Description
	HAVC002510CS20B1	251240A	12	1.5 lb.	Bromine Tabs - 1" Tabs
	HAVC002510CS77C1	258440A	8	4 lb.	Bromine Tabs - 1" Tabs
	HAVC002311CS20P5	2162140A	12	1 lb.	Granular Dichlor
	HAVC002311CS20B2	2161240	12	2 lb.	Granular Dichlor
	HAVC002310CS77C1	2168440	8	4 lb.	Granular Dichlor
	HAVC005210CS20B2	C005210-CS20B2	12	2 lb.	Spa Multi Magic Shock Extra (Sodium Dichloro-S-Triazinetrione)
	HAVC002475CS20B7	2412240A	12	20 oz.	Spa Oxidizing Shock
	HAVC002476CS20B3	2412340A	12	2.2 lb.	Spa Oxidizing Shock
	HAVC002475CS77C2	248540	8	5 lb.	Spa Oxidizing Shock
	HAVC003402CS40P	38P40	12	1 pt.	Brom Bank Concentrated Liquid Bromine
	HAVC002579CS20B6	312140A	12	1 lb.	pH Up (Dry)
	HAVC002578CS40P	3112P40A	12	1 pt.	Liquid pH Plus
	HAVC002625CS20B8	3212240A	12	24 oz.	pH Down (Dry)
	HAVC002624CS40P	3212P40A	12	1 pt.	Liquid pH Minus
	HAVC002693CS20B6	3412140A	12	1 lb.	Alkalinity Increaser (Dry)
	HAVC002693CS20B2	2693-CS20B2	12	2 lb.	Alkalinity Increaser (Dry)
	HAVC002729CS20B6	3512140A	12	1 lb.	Hardness Increaser (Dry)
	HAVC002728CS40P	35P2140A	12	1 pt.	Liquid Hardness Increaser
	HAVC003249CS40P	57P40A	12	1 pt.	Spa Stain & Scale Prevention and Metal Remover
	HAVC003249CS20Q	3249-CS20Q	12	1 qt.	Spa Stain & Scale Prevention and Metal Remover
	HAVC003292CS40P	59P40A	12	1 pt.	Spa Defoamer
	HAVC003186CS40P	561P40A	12	1 pt.	Clarifier
	HAVC003403CS40P	609P40A	12	1 pt.	Natural Clear (Enzyme Based)
	HAVC003271CS40P	58P40A	12	1 pt.	Spa Cleaner
	HAVC004599CS40P	604P40A	12	1 pt.	EZ Enzyme
	HAVC002854CS20B2	3812S40	12	2 lb.	Simply Soft
	HAVC002854CS20X6	C002854-CS20X6	20	6 oz.	Simply Soft
	HAVC003732CS40P	372P40A	12	1 pt.	Filter Cleaner Liquid
	HAVC005128CS40P	C005128-CS40P	12	1 pt.	System Cleanse

All items cataloged are normally stocked unless noted.
Not Stocked ✻ While Supplies Last

QUALITY POOL SUPPLY

Code	New Product Number	Old Product Number	Case	Size	Description
		Pool Products			
	NCH03122NCM	NAT03122	6	2 L	Pool First Aid - Problem Solver Breaks down pollen and dead algae
	NCH13220NCM	NAT03220	6	2 L	Enzyme weekly maintenance product
	NCH15301NCM	NAT15301	4	3 L	Pool Perfect Max with Phosfree
	NCH13121NCM	NAT03121	4	3 L	Pool Perfect Concentrate
	NCH15235NCM	NAT05235	6	2 L	Pool Perfect Concentrate & Phosfree
	NCH15131NCM	NAT05131	4	3 L	Pool Perfect + Phosfree
	NCH15225NCM	NAT05225	6	2 L	Pool Perfect Total - Pool Perfect Total - Enzymes, phosphate remover, and clarifier
	NCH15141NCM	NAT05141	12	1 L	Pool Magic & Phosfree - Enzyme treatment that removes waterline ring + phosphate remover
	NCH15025NCM	NAT05025	12	1L	Phosfree Extra Strength
	NCH15221NCM	NAT05221	6	2 L	Phosfree Removes problem-causing phosphates on the filter.
	NCH15121NCM	NAT05121	4	3 L	Phosfree
	NCH15303NCM	NAT15303	6	1 qt.	Phosfree Max
	NCH20500PRO	NAT20500	12	1 qt.	Pro Series PhosRemove (Strongest Phosphate Remover) 10,000 PPB with 32 oz. in 10,000 gallons
	NCH15236NCM	NAT05236	4	3 L	Phosfree Extra Strength

All items cataloged are normally stocked unless noted.

Not Stocked ✻ While Supplies Last

MAXIMUM pool performance POWERED by Natural Chemistry®

NATURAL CHEMISTRY®

Pool Perfect® MAX will transform every pool into a sparkling wonder! ***But don't stop there***. Check out our full line of performance enhancing pool and spa products.

Scan the QR code to view our entire catalog of products

© 2021 NC Brands L.P. All rights reserved. NATURAL CHEMISTRY, the NATURAL CHEMISTRY logo, PHOS FREE and POOL PERFECT are trademarks of NC Brands L.P.

KEEP CALM AND KLEAR ON

Stress-free pool and spa care.

As amazing as Chitosan Clarifier is, don't miss out on the other high quality pool and spa products from SeaKlear that will help provide your customers a more relaxing water experience.

SeaKlear®

© NC Brands L.P. 2020. Natural Chemistry, Pro Series and Sea-Klear are trademarks owned by NC Brands L.P., registered in the United States of America and other countries.

Code	New Product Number	Old Product Number	Case	Size	Description
		Pool Products			
	NCH13722NCM	NAT03722	12	1 L	Pool Magic Spring & Fall • Reduces waterline rings during the off season • Great way to make opening and closing fast and easy • Specifically formulated for cooler water temperatures • Can be used with all filter medias and pool surfaces • Compatible with all sanitizers • Minimizes scrubbing
	NCH10177NCM	NAT00177	12	1 qt.	Pool Cover Cleaner (Also good for cleaning auto covers)
	NCH20701PRO	NAT20701	4	1 ga.	Pro Series Stain and Scale Control
	NCH17001NCM	NAT07001	12	1 L	Metal Free Phosphate Free Chelating Agent
	NCH10176NCM	NAT00176	12	22 oz.	Clean & Perfect Enzyme Cleaner with Trigger Sprayer
	NCH13500NCM	NAT03500	12	1 qt.	Clear & Perfect 6-in-1 Clarifier
	NCH13555NCM	NAT03555	12	1 qt.	Clear - Chitosan Based Clarifier
	NCH17400NCM	NAT07400	12	1.75 lb.	StainFree - Citric acid metal stain removal
	NCH17395NCM	NAT07395	12	1.75 lb.	Stain Free Extra Strength
	NCH17511NCM	NAT07511	12	2 L	Scale Free
	NCH17600NCM	NAT07600	12	1 qt.	Algae Break 90
	NCH18002NCM	NAT08002	4		**Hassle Free Kits:** Closing / Opening Kit includes: • 1 Liter Pool Magic+PHOSfree • 1 Liter METALfree • Cold water SMARTZyme™ technology works all winter long • Reduces existing and controls off season waterline ring • Cleans and protects during the off season • Prevents metal staining and non-living organic staining • Saves time & money

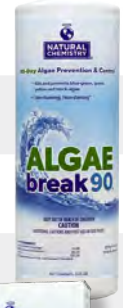

All items cataloged are normally stocked unless noted.
Not Stocked ✻ While Supplies Last

QUALITY POOL SUPPLY

Code	New Product Number	Old Product Number	Case	Size	Description
		Pool Products			
	NCH13125NCM	NAT03125	6	2 L	**Purge** Helps clean plumbing of organic waste
	NCH13215NCM	NAT03215	12	1 L	**Filter Perfect** Sand and cartridge filter cleaner
	NCH17200NCM	NAT07200	6	4 lb.	**Phosfloc** For pools with phosphate levels over 1,000 ppb. Will drop phosphate level to manageable levels for use of PHOSfree or Pool Magic+PHOSfree
	NCH17404NCM	NAT07404	4		**Salt Water Magic - Monthly Kit Maintenance Kit** Reduces common maintenance issues for salt chlorine generators. Contains Salt Water Magic Liquid and Cell Protect, treats 20,000 gallons a month.
	NCH17401NCM	NAT07401	4	1 ga.	**Instant Pool Water Conditioner** Liquid stabilizer that protects chlorine from sun instantly. One gallon raises CYA by 32ppm in 10,000 gallons of water
	NCH17100NCM	NAT07100	12	32 oz.	**CoverFree** Invisible barrier that conserves water and heat by reducing evaporation

All items cataloged are normally stocked unless noted.

Not Stocked ✻ While Supplies Last

NC BRANDS™ NATURAL CHEMISTRY®

Spa Products

Code	New Product Number	Old Product Number	Case	Size	Description
	NCH17431NCM	NAT07431	6	Kit	CYA Removal Kit • Two-part system for reducing excessive levels of cyanuric acid in swimming pools • Step 1 is an easy way to neutralize chlorine and bring levels within optimum range for CYA removal process • Step 2 easily removes CYA with bioactive organic compounds
	NCH14251NCM	NAT14251	12	16 oz.	Phosphate Remover 16oz
	NCH14021NCM	NAT04021	12	16 oz.	Spa Perfect
	NCH04034	NAT04034	6	2 L	Spa Perfect
	NCH14230NCM	NAT04230	12	32 oz.	Cleanse Weekly
	NCH14235NCM	NAT04235	12	32 oz.	Stain & Scale Control
	NCH14232NCM	NAT04232	12	32 oz.	DeFoamer Plus
	NCH14216NCM	NAT04216	12	16 oz.	Spa Clarifier
	NCH14237NCM	NAT04237	12	33.9 oz.	Pipe Cleanse
	NCH13215NCM	NAT03215	12	33.9 oz.	Filter Perfect
	NCH10176NCM	NAT00176	12	22 oz.	Clean and Perfect

All items cataloged are normally stocked unless noted.
Not Stocked ✻ While Supplies Last

QUALITY POOL SUPPLY

Spa - Sanitizers & Oxidizers

Code	New Product Number	Old Product Number	Case	Size	Description
	NCH14229NCM	NAT04229	12	1.5 lb.	Bromine Tabs
	NCH14220NCM	NAT04220	4	4.5 lb.	Bromine Tabs
	NCH14221NCM	NAT04221	12	2 lb.	Chlorine Concentrate Granular
	NCH14223NCM	NAT04223	4	5 lb.	Chlorine Concentrate Granular
	NCH14206CNM	NAT04206	12	3.15 lb.	Oxidizing Shock
	NCH14207NCM	NAT04207	6	7 lb.	Oxidizing Shock
	NCH14224NCM	NAT04224	12	2 lb.	One-Step Brominating Chlorine

Spa - Balancers

Code	New Product Number	Old Product Number	Case	Size	Description
	NCH14202NCM	NAT04202	12	2.49 lb.	pH Increaser
	NCH14203NCM	NAT04203	12	3.37 lb.	pH Decreaser
	NCH14204NCM	NAT04204	12	2.71 lb.	Alkalinity Increaser
	NCH14205NCM	NAT04205	12	1.83 lb.	Calcium Hardness Increaser

All items cataloged are normally stocked unless noted.

Not Stocked ✻ While Supplies Last

Code	New Product Number	Old Product Number	Description
			Spa Natural Mineral Purifiers
	ZODW20750	20660	**Spa Purifier** - Simply drop into your spa filter cartridge - For up to 1,000 gallon spa - Lasts 4 months - Reduces chlorine consumption - Destroys algae and bacteria - Works Nature2 Cense® for the added benefit of aromatherapy - Low maintenance; lasts up to 4 months
	JNDW29300	22300	**Spa Test Strips** - 50 strips - Tests for alkalinity, pH, and monopersulfate - 24/case - Free display box with case purchase
			Nature² Spa Shock Cense • 2 lb. non-chlorine (Potassium Monopersulfate) oxidizer • Choose from four exquisite fragrances • No more chlorine smell
	ZODW25000	W25000	**Island Pleasures** A tropical, fruity, and floral blend of mandarin, coconut, pineapple and creamy vanilla, accented with soft petal jasmine.
	ZODW25001	W25001	**Simple Rituals** This vibrant combination of spring blossoms, freesia, cassia, night blooming jasmine and sweet citrus notes creates a modern, sheer floral that is clean and fresh.
	ZODW25002	W25002	**Quiet Escape** A unique blend of vanilla, amber, and cinnamon, with a floral heart of rose, jasmine and geranium, rounded out by rich cedar and lavender.
	ZODW25003	W25003	**Divine Secrets** A tranquil, marine accord that combines lavender flowers blended with camellia and sheer green herbs, with vanilla, musk and precious woods to add depth to the scent.
	ZODW25004B	W25004	Variety Pack - 4/Case *(sold by the case only)*

All items cataloged are normally stocked unless noted.
Not Stocked ✻ While Supplies Last

QUALITY POOL SUPPLY

Pool Chemicals

Code	New Product Number	Old Product Number	Case	Size	Description
	JMPMAGENTA032	MAGENTA032	12	1 qt.	**The Magenta Stuff** The most advanced sequestering product available.
	JMPPINK032	PINK032	12	1 qt.	**The Pink Stuff** Professional strength general purpose sequestering agent. Especially recommended for startups.
	JMPBLUE032	BLUE032	12	1 qt.	**The Blue Stuff** For Stain & Copper Removal
	JMPSTEPSTUFF	STEPSTUFF	12	8 oz.	**The Step Stuff** For Removing Stains on White In-pool Stairs
	JMPIRON2	IRON2	12	2 lb.	**Stain Solution #1** **The Iron, Cobalt & Spot Etching Stuff** A nontoxic, non-acid product for removing iron & cobalt stains
	JMPCOPPER5	COPPER05	4	5 lb.	**Stain Solution #2** **The Copper & Scale Stuff** Removes copper & scale stains. Must balance pool water before using.
	JMPSTAINID	STAINID	12		**Stain Kits** The first step in performing a successful stain removal. Takes out the guesswork of stain removal.
	JMPFIBER9	JMFIBER9	36	9 oz.	**Filter Fiber Stuff** Clarity Enhancer
	JMPFIBER18	JMFIBER18	20	18 oz.	**Filter Fiber Stuff** Clarity Enhancer
	JMPFIBER36	JMFIBER36	10	36 oz.	**Filter Fiber Stuff** Clarity Enhancer
✻	JMPSEQUEST	SEQUEST	1	9 oz.	**Sequest Test Kit** To measure the amount of Pink and Blue Stuff working in the pool.
✻	JMPION032	ION032	12	1 qt.	**ION Solution, The Ionizer Stuff** Prevents copper stains when using Alternative Sanitation Systems

All items cataloged are normally stocked unless noted.

Not Stocked ✻ While Supplies Last

Code	New Product Number	Old Product Number	Case	Size	Description
		Pool Chemicals			
✻	JMPALL032	JMALL032	12	1 qt.	**All Fixed Up Stuff** Weekly maintenance product that contains an extra strength clarifier.
✻	JMPALL128	JMALL128	4	1 ga.	**All Fixed Up Stuff** Weekly Maintenance
✻	JMPEMERALD032	JMEMERALD032	12	32 oz.	**Emerald Stuff - Four-By-One Clarifier** Quickly removes oils, metals, cosmetics etc. Increases filter efficiency.
✻	JMPNATCLEAN032	JMNATCLEAN032	12	1 qt.	**Clean Water Solution** **The Natural Clean Stuff** Strongest, most durable natural enzyme available. Cuts down on tile cleaning and extends filter runs.
✻	JMPNATCLEAN128	JMNATCLEAN128	4	1 ga.	**Clean Water Solution** **The Natural Clean Stuff**
✻	JMPSUPER032	JMSUPER032	12	32 oz.	**The Pool Solution** **The Super Stuff** Works like a clarifier and functions as an oil-in-water emulsion breaker

All items cataloged are normally stocked unless noted.

Not Stocked ✻ While Supplies Last

QUALITY POOL SUPPLY

SeaKlear

Pool Products

Code	New Product Number	Old Product Number	Case	Size	Description
	NCH1040120	1040120	12	1 qt.	PhosKlear 4000 Phosphate Remover
	NCH90402SKR	SKQ	12	1 qt.	Chitosan Clarifier
	NCH90302SKR	SKG	4	1 ga.	Chitosan Clarifier
	NCH90245SKR	1112000	12	1 qt.	Solar Shield Liquid Solar Blanket
	NCH90411SKR	SKA	12	1 qt.	SeaKlear 90 Day Algae Prevention & Remover for Pools
	NCH90408SKR	SKTC	12	1 qt.	Thick Tile & Vinyl Cleaner
	NCH1040400	1040400	12	1 qt.	Free and Klear Clarifier, Phosphate Remover, & Enzymes
	NCH90052SKR	1040401	4	1 ga.	Free and Klear Clarifier, Phosphate Remover, & Enzymes
✻	NCH90180SKR	1010300	12	1 qt.	Rescue Clear Clarifier & Enzymes
	NCH90207SKR	1040105	12	1 qt.	Commercial Phosphate Remover
✻	NCH1110011	1110011	12	1 qt.	Metal Stain Remover
✻	NCH90574SKR	1110012	12	1 qt.	Stain Remover Pro Strength
✻	NCH90572SKR	1110014	12	1 qt.	Natural Stain Remover
	NCH90525SKR	1020004	12	2 lb.	Yellow Klear for Algae (Stocked in Waterford and Clio only)

All items cataloged are normally stocked unless noted.

Not Stocked ✻ While Supplies Last

Code	New Product Number	Old Product Number	Case	Size	Description
		Algae Control			
	NCH17612COR	22222	12	2 lb.	Yellow Out
	NCH17610NCM	22444	12	8 oz.	Yellow Out
	NCH0764217642	Green2Clean	12	2 lb.	Green Aid (2 lbs. for every 15,000 gallons)
	NCH07624	Green2Clean4	8	4 lb.	Green Aid (2 lbs. for every 15,000 gallons)
	PCH101001	101001	12		**Standard**: Treats 7,500 - 20,000 Gallons
	PCH101066	101066	12		**Extreme**: Treats 20,000 - 30,000 Gallons
	PRX102001	102001	18		**Booster**: Treats 7,500 - 20,000 Gallons
		Metal & Stain Control			
	CUL1MO	CUL-1MO	48		Metal Remover
✻	CULWC	CUL-WC	48		Winter Closer
		Pool Chemicals			
	LZA20154A	20154	12	1 qt.	**Super Blue** Water Clarifier
	PCHWIPEOUTQT	WO02-07-6012	12	1 qt.	**Wipe Out** Pool & spa surface cleaner

All items cataloged are normally stocked unless noted.
Not Stocked ✻ While Supplies Last

QUALITY POOL SUPPLY

Code	New Product Number	Old Product Number	Case	Size	Description
		ESL Pool Products			
		Treatment and prevention. It kills existing algae and defends your pool against algae for up to 30 days.			
	ASHASQTC	ALGAESHIELD	12	32 oz.	AlgaeShield
		ALGAESHIELD4	4	1 ga.	AlgaeShield
		ALGAESHIELD2	2	2.5 ga.	AlgaeShield
		A blend of biodegradable, environmentally friendly, plant-based enzymes to work with all swimming pool water treatment programs. Naturally reduces cyanuric acid levels.			
	ASHENZYPUREQC	ENZYPURE	12	32 oz.	Enzypure
		ENZYPURE4	4	1 ga.	EnzyPure
		One-Step Metal Stain Remover			
	ASHASMETALSHLDQ	METALSHIELD	12	32 oz.	MetalShield
		METALSHIELD4	4	1 ga.	MetalShield
		Environmentally friendly, naturally reduces CYA with 1-3 pm of Chlorine.			
	ASHASCYADQC	CYADOWN	23	32 oz.	CYADown

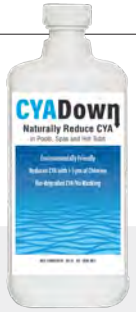

All items cataloged are normally stocked unless noted.

Not Stocked ✻ While Supplies Last

Code	New Product Number	Old Product Number	Description
			Pond Chemicals
	CYGCPLS1	10801	**CUTRINE PLUS** Liquid Algaecide, 1 gallon
	CYG390230A	10830	**CUTRINE PLUS** Granular Algaecide, 30 lb.
	NAVIGATE50	10825	**Navigate** 2, 4-D Weed Killer 50 lb. Used to control Eurasian Water Milfoil, Coontail and Lilypads (Water Lilies). Restrictions — swimming 1 day. Not for use in domestic or dairy animal water.
	CYG281745	10820	**CYGNET SELECT ORGANIC LAKE DYE -1 gallon** Will color the water a deep rich blue. Inhibits the growth of algae and weeds by reducing light penetration. **Application rate —** 1 gal./4 acre feet of lake or pond water.
	CYG393112	393112	**<u>Water Weeds & Algae</u>** (BOOK) How to identify and control water weeds & algae. Published by Applied Biochemists. 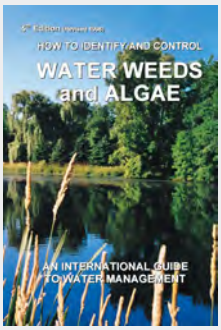

All items cataloged are normally stocked unless noted.
Not Stocked ✻ While Supplies Last

Code	New Product Number	Old Product Number	Size	Description
		Bulk Chemicals		
	PCH3TABUW25		25 lb.	3" Tab Trichlor, Unwrapped
	BKISC50	1010B	50 lb.	**Sodium Bicarbonate** Pool Grade Raises total alkalinity
	BKISAD50	SODA	50 lb.	**Sodium Carbonate (Soda Ash)** Raises pH
	LZA71432A	71432	100 lb.	**Calcium Hypochlorite Shock** 65% Available Chlorine
	BKICCF50	CALCIUM	50 lb.	**Calcium Chloride** Raises Water Hardness
	BKISS50	SODIUM BISULFATE	50 lb.	**Sodium Bisulfate** Lowers pH
	HAVC002833PL25	382513	25 lb.	**Chlor Out (Sodium Thiosulfate)** Chlorine Neutralizer - Drum
	PCH22023	22023	25 lb.	1" Bromine Tabs - Pail
	PCH22024	22024	50 lb.	1" Bromine Tabs - Pail

All items cataloged are normally stocked unless noted.

Not Stocked ✻ While Supplies Last

INDEX

AquaLink Control System 284
Bio-Lab Brominator Parts 293
CCH Sanitation System 274
Chemical Pumps 292
Chlorine & Bromine Feeders 273
Easytouch® Controls 286
Intellichlor 293
Intermatic Control 291
King Tech 276
Nature 2 279
ProLogic Controls 282
Salt & Swim Chlorination 285
Salt Chlorination 280
Surge Protector 291
Time Clocks 290
UV Systems 272

FROG®

POOL SANITIZER

FEEL THE FRESH MINERAL WATER DIFFERENCE

- Reduces chlorine up to 50%*
- Easier on skin and pool surfaces
- Easy to install or retrofit
- Precision performance—just set it & forget it
- Lifetime warranty on Pool FROG® Cyclers

frogproducts.com • 800.222.0169

*Compared to the minimum EPA recommended chlorine level of 1.0 ppm for a stabilized swimming pool.
∞ For pools and hot tubs.

FROG® makes pool care easy and effective for pools up to 25,000/40,000 gallons.

QUALITY POOL SUPPLY

Code	New Product Number	Old Product Number	Description
		Pool Salt	
	BKISPS40	SALT	40 lb. high purity salt for chlorine generators
			10% pallet quantity discount (63 Bags)
		Please note packaging may vary.	
		UV Sterilizers	
PENTAIR		**Bioshield**	• Low Pressure High Output lamps • Viewing Ports for visual indication of lamp status
	PEN522635	522635	25 GPM 115/230V - 2" Unions
	PEN522636	522636	45 GPM 115/230V - 2" Unions
	PEN522637	522637	62 GPM 115/230V - 2" Unions
	PEN522638	522638	100 GPM 115V - 3" Unions
Paramount Pool Life. Simplified.		**Ultra UV_2**	
	PMT004422202200	P004422202200	Water Sanitizer 120V Plug In 2 UV-C Lamp
HAYWARD		**HydraPure UV & O3**	
	PMT004952001000	P004952001000	HydraPure UV and Ozone System Corded 120V - Stocked in Clio only
	PMT004952002000	P004952002000	HydraPure UV and Ozone System Hardwired 120/240V - Stocked in Perrysburg only
DeltaUV Ultraviolet Solutions		**Delta UV®**	
		D-Series Units have 2" Ports, 110v, Must be Hard Wired	
✻	DUVD80	D-80	80 GPM Maximum Flow Rate

All items cataloged are normally stocked unless noted.

Not Stocked ✻ While Supplies Last

Code	New Product Number	Old Product Number	Description
			Pool Chlorinators
	CMP25280150000	25280-150-000	**Power Clean Ultra In-Line Chlorinator (Clear Glass Lid, w/Kit)** 1. Holds twelve 3" tablets or 5 lbs. 1" tablets 2. 100% Shut-Off Dial 3. Built in Flow Indicator for Easy adjustment 4. Treat Pools from 5,000-50,000 Gallons 5. Glass Lid Option for Easy Service 6. 1.5 & 2" Unions for Quick Disconnect 7. One piece molded design to cut down on leaks 8. Variable Speed Conversion Kit included to allow Chlorine flow as low as 20 GPM
			Perform-Max Chemical Feeder
			Model #940 Model #980 Model #960
	FRG01050940	KT01-05-0940	**In-line Feeder** up to 50,000 gallons using chlorine and up to 25,000 gallons using bromine. 2" threaded ports.
	FRG01050980	KT01-05-0980	**In-line Feeder** up to 50,000 gallons using chlorine and up to 25,000 gallons using bromine. 2" MPT x 1 1/2" Reducers.
	FRG01050960	KT01-05-0960	**Off-line Feeder** up to 50,000 gallons using chlorine and up to 20,000 gallons using bromine. Off-line kit which cannot be converted to in-line.

QUALITY POOL SUPPLY

Code	New Product Number	Old Product Number	Description
HAYWARD		**Chlorinators**	
	HPPCL200	CL200	**In-Line Chlorinator** 9 lb. Capacity
	HPPCL220	CL220	**Off-Line Chlorinator** 9 lb. Capacity
RELIANT®		**Chlorinators**	
	BCIB8014	QBC0169	Inline 9.0 lb. Capacity
	BCIB8012	QBC0167	Inline 4.2 lb. Capacity
	BCIB7940	QBD0727	Large Floating Chlorinator
	BCIB7901	QBD0733	Small Floating Chlorinator
GAME The Fun Solutions People		**Chlorinators**	
	GAM2002	GAM2002	Surfin' Shark
	GAM4002	GAM4002	Derby Duck
CCH		**CCH® Endurance System** Commercial Pool & Spa Water Sanitation System www.cchendurance.com	
	CCH73100	CCH73100	CCH® Endurance Feeder System
	CCH23227	CCH23227	CCH® Endurance 25 lb. Tabs - 36/Skid

All items cataloged are normally stocked unless noted.

Not Stocked ✻ While Supplies Last

Code	New Product Number	Old Product Number	Description
PENTAIR			**Chlorinators/Feeders**
	PENR171086	R171086	Rainbow floating chlorine dispenser, holds 3 lbs. of tabs or sticks - 330
	PENR171090	R171090	Rainbow Adjustable Floating Chlorine/Bromine Feeder - 335
	PENR171096	R171096	#320 In-Line Model (12,000 - 48,000 Gallons), 1" or 3" tabs
	PENR171016	R171016	#300 Off-line/Free Standing Model (12,000 - 48,000 Gallons), 1" or 3" tabs
	PENR171070	R171070	Commercial Model - 300-29X Dispenses 8.5 lbs. of 1" Trichlor Tablets in 24 hrs. Holds 29 large or 237 small tablets Treats 80,000 - 322,000 gallons
	PENR171215	R171215	High Capacity Chlorine/Bromine - NSF HC3315 - (max. output 1.22 lbs. / hour) Maximum pool size: chlorine 97,600 gal. bromine - 20,200 gal.
	PENR171230	R171230	High Capacity Chlorine/Bromine - NSF HC3330 (max. output 2.0 lbs. / hour) Maximum pool size: chlorine 160,000 gal. bromine - 40,000 gal.
	PENR172080	R172080	Optional Flow Indicator for model R171016
	PENR172276	R172276	Optional Flow Indicator for models R171070, R171096 and R171100
	PENR172288	R172288	1 1/2" - 2" Corrosion Resistant 2# Check Valve

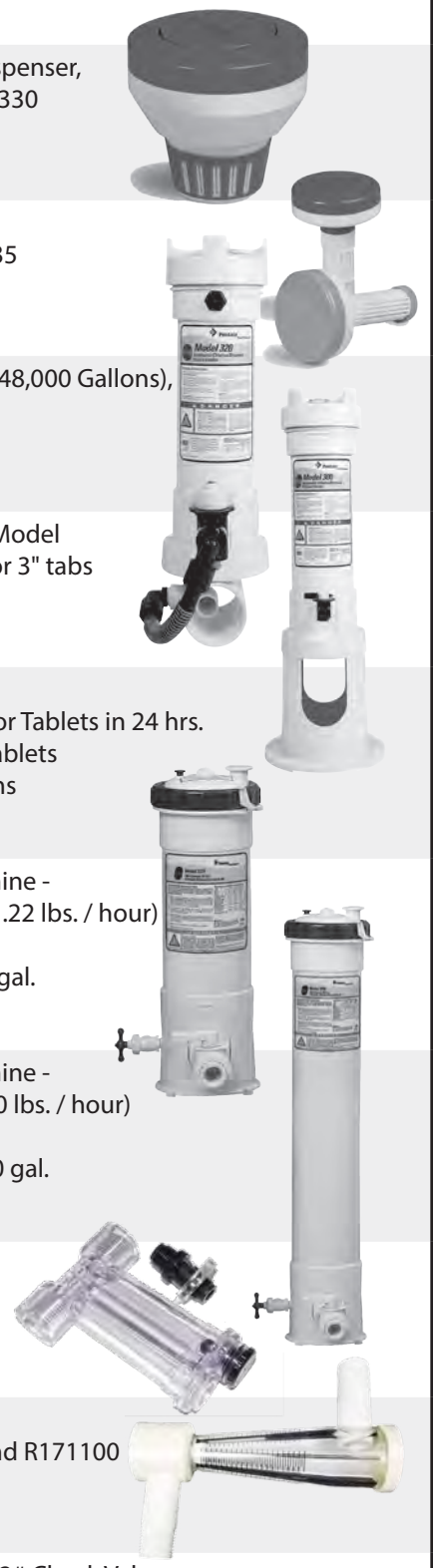

All items cataloged are normally stocked unless noted.
Not Stocked ✻ While Supplies Last

QUALITY POOL SUPPLY

Code	New Product Number	Old Product Number		Description
		Inground Feeders		
	FRG01010400	KT01-01-0400		**Cycler Feeder -** up to 40,000 gallons
	FRG01035613	KT01-03-4613	6.16 lb.	Feeder Cartridge
				Case of 3 Cartridges
	FRG01010120	KT01-01-0120		**Cycle Feeder -** up to 25,000 gallons
	FRG01031413	KT01-03-1413	4.16 lb.	Feeder Cartridge
				Case of 3 Cartridges
		Spa Sanitizers		
	FRG01143883	KT01-14-3883		FROG Serene® Floating System (formerly SPA FROG) **Mineral** & **Bromine** system • Mineral lasts about 4 months • Bromine lasts 2 to 4 weeks
	FRG01143812	KT01-14-3812		Spa Frog **mineral** replacement cartridge (Case of 12)
	FRG01143824	KT01-14-3824		Spa Frog **bromine** replacement cartridge (Case of 24)
	FRG01143856	KT01-14-3856		**Spa Frog Retail Kit** Kit Includes: One mineral cartridge and three bromine cartridges (Case of 6 kits)
	FRG01146132	KT01-14-6132		Spa Frog Maintain • Non-Chlorine Shock, One dose packs, Cyanuric Acid Free (Box of 12 packets)
	FRG01143712	KT01-14-3712		Spa Frog Filter Mate® (Formerly Filter FROG) • Lasts about 4 months • Uses a filter core or skimmer (Case of 12)

All items cataloged are normally stocked unless noted.

Not Stocked ✻ While Supplies Last

Fresh Mineral Water® Systems

Code	New Product Number	Old Product Number	Description
	FRG1296613	KT01-01-5450	**Pool Frog XL Pro Inground** Mineral (5462) and Chlorine (01-03-5613) combo with more Chlorine Capacity for less maintenance. For pools up to 40,000 gallons. 2" ports.
	FRG01035613	KT01-03-4613	**Pool Frog XL Pro 6.16# Chlorine Pac**
	FRG01016180	KT01-01-6180	**Above Ground FROG Cycler** Includes Mineral Pac. In-line type with 1.5" ports Improved Capacity, New Cap & Control Dial.
	FRG01015480	KT01-01-5480	**Inground FROG Cycler** Includes Mineral Pac In-line type with 2" ports
	FRG1311223	KT01-01-5490	**Inground FROG Cycler** Includes Mineral Pac off-line model
	FRG01126112	KT01-12-6112	**FROG Mineral Reservoir** (Above Ground Replacement) Now comes with Start-up Water Polishers
	FRG01125462	KT01-12-5462	**FROG Mineral Reservoir** (In Ground Replacement) Now comes with Start-up Water Polishers
	FRG01105060	KT01-10-5060	**FROG BAM 90 Day Algaecide Cartridge** (For Frog 5100 or 5400 Cycler) (Case of 12)
	FRG01035880	KT01-03-5880	**FROG Low Chlorine Pac** (Replaces 5050) 2.2 lbs. (Case of 12)

QUALITY POOL SUPPLY

King TECHNOLOGY™

Fresh Mineral Water® Systems

For Pools

Code	New Product Number	Old Product Number	Description
	FRG01128412	KT01-12-8406	**Flippin' Frog** For pools 2,000 - 5,000 gallons Combines minerals & chlorine unit Flips over when chlorine is out
	FRG01038356	KT01-03-8356	**Flippin' Frog Replacement Chlorine Cartridge**
	FRG01128606	KT01-12-8606	**Flippin' Frog XL** For pools 5,000-10,000 gallons Combines minerals & chlorine unit Flips over when chlorine is out
	FRG01038550	KT01-03-8550	**Flippin' Frog Replacement Chlorine Cartridge**
	FRG01184406	KT01-18-4406	**INSTANT FROG** For existing inground pools up to 25,000 gallons. Drops in skimmer basket. Lasts 6 months. (6 / case)

@Ease System for Spas

	FRG01143256	KT01-14-3256	**@Ease Floating Sanitizing System** • The Silver SmartChlor Cartridge last 3-4 weeks • Blue Mineral Cartridge lasts 4 months • 75% less Chlorine use • Combines Mineral and SmartChlor Technology
	FRG01143258	KT01-14-3258	**@Ease Floating Smartchlor Cartridge 3-Pack** • SmartChlor Technology slowly releases over 3-4 weeks • Sanitizing System flips over when its time to replace cartridge 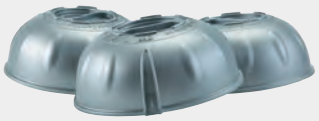
	FRG529617	KT01-14-3350	**@Ease Test Strips** • Single Color Match for Easy Reading

All items cataloged are normally stocked unless noted.

Not Stocked ✻ While Supplies Last

Pool

Natural Mineral Purifiers

- *No electricity*
- *No moving parts*
- *Safe for kids*
- *Cuts chlorine use up to 90%*
- *Cartridges last a whole season*
- *Complete program of sales tools*
- *Cost the same or less than chlorine*

Code	New Product Number	Old Product Number	Description
CALL	ZOD25904	25904	**Pro G** In-ground for up to 45,000 gallons (feeder only) Uses IG Cartridges (use two 437-251 reducer bushings to convert to 1.5")
	ZOD20086	20086	**Express Purifier** (Includes Cartridge) Inground up to 25,000 gallons
	ZOD20176	20176	**Express Purifier** (Includes Cartridge) Above Ground up to 25,000 gallons
	ZODW28175	26775	**Express cartridge only** For use with 20086 or 20176
	ZODW28155	26755	**Premium M cartridge only** (vessel no longer sold)
	ZOD21500	21500	**Pool Purifier** Drops into Pool Filter Cartridge. For up to 25,000 gallons
	ZODW28165	26765	**Cartridge** - For older "A" vessels
	JNDW28125	26725 ♦	**Cartridge** - For inground 10,000 - 25,000 gallons
	ZODW28135	26735 ♦	**Cartridge** - For inground 25,000 - 35,000 gallons
	ZODW28145	26745 ♦	**Cartridge** - For inground 35,000 - 45,000 gallons

Pro G

All items cataloged are normally stocked unless noted.

♦ Can also be used in Nature2 Vision Systems

Not Stocked ✻ While Supplies Last

QUALITY POOL SUPPLY

Code	New Product Number	Old Product Number	Description
HAYWARD GOLDLINE		**Salt Chlorination**	GOLDLINE PRODUCTS WARRANTY NOTICE: Goldline is no longer allowing over-the-counter exchanges for warranty claims. Please contact the manufacturer's representative for instructions.
AQUA TROL		**For Above Ground Pools**	
BRICK AND MORTAR / NO INTERNET SALES		• Easy 30 minute installation • Digital Salt level display • Seven diagnostic indicators • Built-in 24 hour timer • Automatic cell cleaning • 1 year limited warranty	
	HPPAQTROLRJ	AQ-TROL-RJ	Up to 18,000 gallons Straight Blade Cord Installation
CALL	HPPAQTROLRJTL	AQ-TROL-RJ-TL	Up to 18,000 gallons Twist Lock Cord Installation
AQUA RITE		**For Inground Pools**	
BRICK AND MORTAR / NO INTERNET SALES		• Digital Salt level display • Eight diagnostic indicators • Automatic cell cleaning • Cells Include 15' Cable • Aqua Rite 900 units produce 25% more chlorine than standard Aqua Rite	
	HPPAQR925	AQR925	Aqua Rite 900 with 25,000 Gallon Extended Life Turbo Cell • **Expert Line**
	HPPTCELL925	TCELL925	Extended Life turbo cell Replacement up to 25,000 (4-year warranty)
	HPPAQR940	AQR940	Aqua Rite 900 with 40,000 Gallon Extended Life Turbo Cell • **Expert Line**
	HPPTCELL940	TCELL940	Extended Life turbo cell Replacement up to 40,000 (4-year warranty)
	HPPAQR3	AQR3	Aqua Rite Control with 15,000 Gallon Cell (3-year warranty)
		Replacement Chlorinator Cells	
	HPPGLXCELL15	GLX-CELL-15	15' Cord 40,000 Gallons - 3 year limited warranty
	HPPGLXCELL9W	GLX-CELL-9-W	15' Cord 25,000 Gallons - 1 year limited warranty
	HPPGLXCELL3W	GLX-CELL-3-W	15' Cord 15,000 Gallons - 1 year limited warranty

All items cataloged are normally stocked unless noted.

Not Stocked ✻ While Supplies Last

Code	New Product Number	Old Product Number	Description
HAYWARD GOLDLINE		**Salt Chlorination**	GOLDLINE PRODUCTS WARRANTY NOTICE: Goldline is no longer allowing over-the-counter exchanges for warranty claims. Please contact the manufacturer's representative for instructions.
AQUA PLUS Automation and Chlorination			• Any Pool or Spa System up to 40,000 Gallons • Controls up to 4 relays, 3 valve actuators, 1 solar and 1 conventional heater • Built-in 100A subpanel • Super Chlorinate function • Variable speed pump control • Displays time, day, pool and spa temperature and ambient air temperature • Built-in keypad for complete operation and programming • Fully programmable automatic control of every output • Easy to use buttons for manual control
	HPPPLPLUS	PL-PLUS	Aqua Plus Control with Chlorinator 40,000 Gallon Cell
AQUA RITE™ pro			*Shown with optional Sense & Dispense
	HPPAQR15PRO	AQR15-PRO	Aqua Rite Pro with 40,000 Gallon Cell
		Replacement Chlorinator Cells	
	HPPGLXCELL15	GLX-CELL-15	15' Cord 40,000 Gallons
	HPPGLXCELL9W	GLX-CELL-9-W	15' Cord 25,000 Gallons
	HPPGLXCELL3W	GLX-CELL-3-W	15' Cord 15,000 Gallons

Code	New Product Number	Old Product Number	Description

HAYWARD®
GOLDLINE

PRO LOGIC™
Total Pool Management

Pro Logic Controls are compatible with Sense & Dispense technology, which can automatically sense ORP and pH levels and dispense chlorine or chemicals from a feed pump.
See below for Sense & Dispense options as well as chlorinator options.

We highly recommend heaters with cupro nickel heat exchangers for pools with salt generators.

	Model #	Relays	Valves	Heaters	Soft Keys
HPPPLP4	PL-P-4	4	3	1	0
HPPPLPS4	PL-PS-4	4	4	2	0
HPPPLPS8	PL-PS-8	8	4	2	0
HPPHLCHEM	HL-CHEM	Chemistry Kit1 - pH & ORP Sense, ORP Dispense			
HPPAQLCHEM2	AQL-CHEM2	Chemistry Kit2 - pH Dispense (120v)			
HPPGLXCELL15	GLX-CELL-15	15' Cord	40,000 Gallons		
HPPGLXCELL9W	GLX-CELL-9-W	15' Cord	25,000 Gallons		
HPPGLXCELL3W	GLX-CELL-3-W	15' Cord	15,000 Gallons		
HPPPKIT	P-Kit	Flow switch & Union Kit REQUIRED IF USING A SALT TURBO CELL			

All items cataloged are normally stocked unless noted.
Not Stocked ✻ While Supplies Last

Code	New Product Number	Old Product Number	Description
HAYWARD GOLDLINE		PRO LOGIC™ Remote Controls	
	HPPAQL2BASERF	AQL2-BASE-RF	**Wireless Base** - Required for all wireless remotes tagged with: Installs directly onto the side of the Aqua Logic main control unit and communicates with all Aqua Logic wireless accessories below.
	HPPAQL2POD2	AQL2-POD2	**AquaPod 2.0 Waterproof Wireless Remote** • 100% Water Proof • Rechargeable Batteries (charger included) • Full Control of Pool, Spa and other Outdoor Features • Multiple Control and Program Options
	HPPAQL2SSRF	AQL2-SS-RF	6 Function Wireless **Spa** Remote (waterproof, floats)
		Replacement Parts	
	AQPAF52272000	52272000	2" Union Half
	HPPGLXFLORPPAK10	GLX-FLO-RP	Flow Switch (no PVC tee)
	HPPGLXPCBDSP	GLX-PCB-DSP	PCB Display for Aqua Rite/Trol
	HPPGLXCELLUNION	GLX-CELL-UNION	Union Nut/Tail 2" S Butress Thread
	HPPGLXCELLSTAND	GLX-CELLSTAND	Cleaning Stand for Goldline Units
	HPPGLXPCBPRO	GLX-PCB-PRO	Main PCB - Pro Logic All Versions
	HPPGLXPCBMAIN	GLX-PCB-MAIN	Main PCB All Aqua Logic Units
	HPPGLXPCBRITE	GLX-PCB-RITE	Main PCB for Aquarite Units
		Additional Accessories	
✻	HPPAQCOSERIAL	AQ-CO-Serial	Aqua Connect Home Automation Interface option (Allows Pro Logic to interact with existing home automation)
CALL	HPPGLXPC12KIT	GLX-PC-12-KIT	Temperature Sensor with 15' Leads and hose clamp

All items cataloged are normally stocked unless noted.
Not Stocked ✻ While Supplies Last

QUALITY POOL SUPPLY

Code	New Product Number	Old Product Number	Description
HAYWARD		**OmniLogic Control System**	
	HPPHLOMNIHUB	HLOMNIHUB	Omni Wiring Base Unit, Pad, 1 Smart Relay J-Box and 6' whip
	HPPHLH485RELAY	HLH485RELAY	Hayward Omni RS485 Smart Relay
	HPPHL485SPAKIT	HL485SPAKIT	2 Valve Actuators, 1 Smart Relay, includes J-Box & 6' whip
	HPPHLAQR940	HLAQR940	AquaRite 940 with HLOMNIHUB and HLAQRPCB Daughterboard J-Box and 6' whip
	HPPHLAQRPCB	HLAQRPCB	Daughterboard for adding OmniHub to existing AquaRite
	HPPHLBASE	HLBASE	4-Relay Base Control Unit
	HPPHLWLAN	HLWLAN	Wireless Network Antenna
		OmniLogic Accessories	
	HPPHLRELAYBANK	HLRELAYBANK	4-Relay Module
	HPPHLRELAY	HLRELAY	1-Relay Module
CALL	HPPHLIOEXPAND	HLIOEXPAND	4x4x4 Valves, Sensors, Inputs
	HPPHLWALLMOUNT	HLWALLMOUNT	Wall-Mount Remote
	HPPGVA24	GVA-24	Valve Actuator 24V
	HPPGLXCELL15	GLX-CELL-15	Chlorinator Cell, 15' Cord, 40,000 gallons
	HPPPKIT	P-KIT	Flow Switch & Union Kit (required if using a Salt Turbo Cell)
	HPPHLCHEM	HL-CHEM	Sense & Dispense

All items cataloged are normally stocked unless noted.

Not Stocked ✻ While Supplies Last

Code	New Product Number	Old Product Number	Description
HAYWARD EXPERT LINE			**AquaRite® 100 Salt Chlorinator System**
	HPPAQR100	AQR100	AquaRite® 100 with CCELL, Dual Voltage Wiring, 3 Year Warranty
PENTAIR TRADEGRADE BY PENTAIR			**Salt Chlorine Generators**
	PEN523080	523080	iChlor 15 Bundle Pack with 110V Pigtail Chlorine Generator (up to 15,000 gallons)
	PEN523081	523081	iChlor 30 Bundle Pack 110/230V Hard wired Chlorine Generator (up to 30,000 gallons)
	PEN520888	520888	IC15 Chlorine Generator (up to 15,000 gallons) for smaller pools, includes external power supply
	PEN520554	520554	IC20 Chlorine Generator (up to 20,000 gallons)
	PEN520555	520555	IC40 Chlorine Generator (up to 40,000 gallons)
	PEN521105	521105	IC60 Chlorine Generator (up to 60,000 gallons)
	PEN520556	520556	Power Center - Required for IC20, IC40 & IC60 Cell Salt levels, cell cleanliness, chlorine output and water flow can be viewed at a glance. All performance data is collected daily.
	PEN520595	520595	Union Kit for IntelliChlor Units

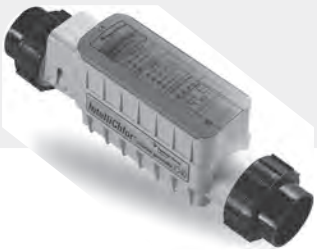

EasyTouch® Control Systems

Pool/Spa Control Systems

520593

Code	New Product Number	Old Product Number	Description
	PEN520593	520593	4 Circuit, Single Water Body System - Includes IC40 cell, Transformer, and SCG Integration (4PSC-IC40)
	PEN520705	520705	8 Circuit, Single Water Body System - Includes IC40 cell, Transformer, and SCG Integration (8PSC-IC40)
	PEN520543	520543	4 Circuit, Pool/Spa System - Includes IC40 cell, Transformer, 2 Actuators, and SCG Integration (4SC-IC40)
	PEN520545	520545	8 Circuit, Pool/Spa System - Includes IC40 cell, Transformer, 2 Actuators, and SCG Integration (8SC-IC40)
	PEN520591	520591	Single Body Base System - No ICP, Transformer, or Actuators (4P)
CALL	PEN520703	520703	Single Body Base System - No ICP, Transformer, or Actuators (8P)
	PEN520538	520538	4 Circuit, Pool/Spa - Includes 2 Actuators No ICP or Transformer
	PEN520540	520540	8 Circuit, Pool/Spa - Includes 2 Actuators No ICP or Transformer
	PEN523317	523317	IntelliConnect Control and Monitoring System

All items cataloged are normally stocked unless noted.
Not Stocked ✻ While Supplies Last

EasyTouch® Control Systems
Pool/Spa Control Systems

Code	New Product Number	Old Product Number	Description
	PEN522104	522104	Bundle Pack - Includes the following 2 items: 1. iPhone®/iPad®/iPod touch® Mobile Digital Device Android Device/ PC and Mac® Computer Interface Kit* 2. ScreenLogic2 Interface Wireless Connection Kit – Includes 2 radio transmitters (eliminates the need to run cable from the Load Center into the home where the protocol adapter and wireless router are located.) AI101 Surge Suppressor for 115V transformer wiring. ½ mile range.
	PEN520272	520272	Temp Sensor
	PEN263045	263045	Valve Actuator
	PEN521485	521485	Intellivalve Valve Actuator
	PEN521178	521178	Spa Command Remote White with 150' Cable
	PEN520106	520106	3hp Relay for IntelliTouch or EasyTouch
CALL	PEN520198	520198	3hp 2-Speed Relay for IntelliTouch
	PEN520548	520548	EasyTouch ICP (Indoor Control Panel) for 4 circuit systems
CALL	PEN520549	520549	EasyTouch ICP (Indoor Control Panel) for 8 circuit systems
CALL	PEN521885	521885	Remote iS4 4 Button White

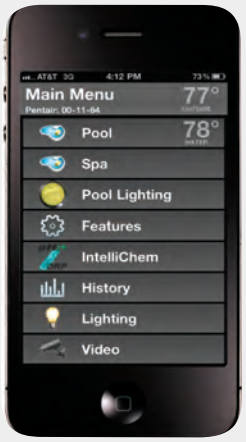

All items cataloged are normally stocked unless noted.
Not Stocked ✻ While Supplies Last

QUALITY POOL SUPPLY

Code	New Product Number	Old Product Number	Description
			Water Purifcation Systems
CALL	ZODFUSION	FUSION	Nature 2 Fusion Inground Tab Feeder (W20011)
CALL	JNDTRUCLEAR11K	TRUCLEAR11K	Salt Chlorinator Kit for New Construction. • Produces 18 grams of Chlorine per hour • Transparent window design allows for visual inspection • Removable cell for easy cleaning • 3-year standard warranty • **Trade Series Exclusive** TRADE SERIES EXCLUSIVE
CALL	JNDR0693900	R0693900	Jandy TruClear Replacement Cell (Stocked in Perrysburg Only)
			"AquaPure" Chlorine/Salt Generator
	JNDAPUREM	APUREM	AquaPure Power Center
CALL	JNDPLC700	PLC700	AquaPure Cell Kit 7-Blade 25' Cables
	JNDPLC1400	PLC1400	AquaPure Cell Kit, 14-Blade, 3-Port Cell
			Control System
✻	ZODZQ4PI	ZQ-4PI	Zodiac Aqualink Z4 Controller, Pool Only with iAqualink • Intuitive set-up and programming • Convenient and easy to use onboard user interface • Four relays control filter pumps, and up to three auxiliary circuits, such as booster pumps, water features, color lights, etc. • Controls up to three valve actuators. Spill-over and solar priority functionality built-in

All items cataloged are normally stocked unless noted.

Not Stocked ✻ While Supplies Last

Jandy® Controls

AquaLink® RS Automation System

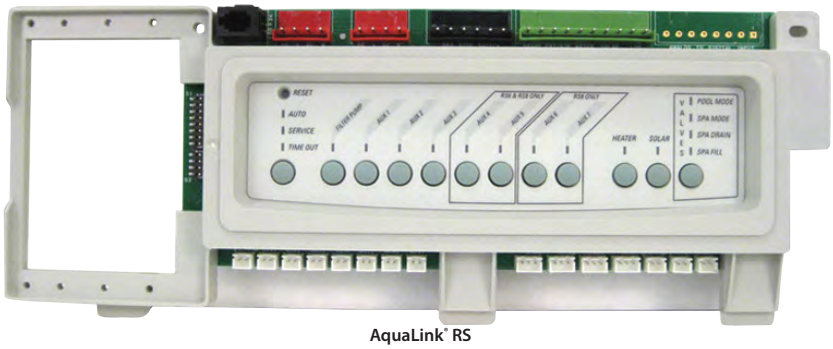

AquaLink® RS

Code	New Product Number	Old Product Number	Description
	JNDRSPS4	RS-PS4	AquaLink RS4 Pool & Spa System
	JNDRSPS6	RS-PS6	AquaLink RS6 Pool & Spa System
CALL	JNDRSPS8	RS-PS8	AquaLink RS8 Pool & Spa System (stocked in Waterford only)
	JNDRSP4	RS-P4	AquaLink RS4 Pool or Spa System
	JNDRSP6	RS-P6	AquaLink RS6 Pool or Spa System
	JNDRSP8	RS-P8	AquaLink RS8 Pool or Spa System
	JNDPDAPS4	PDA-PS4	AquaLink PDA-PS4 Pool & Spa Combination
	JNDPDAPS6	PDA-PS6	AquaLink PDA-PS6 Pool & Spa Combination
	JNDPDAPS8	PDA-PS8	AquaLink PDA-PS8 Pool & Spa Combination
	JNDPDAP4	PDA-P4	AquaLink PDA-P4 Pool or Spa Only
	JNDPDAP8	PDA-P8	AquaLink PDA-P8 Pool or Spa Only
CALL	JNDIQ30A	IQ30-A	iAquaLink 2.0 Network Interface Module
CALL	ZODIQ30RS	IQ30-RS	iAquaLink 2.0 Upgrade Kit RS Systems
CALL	JND7443	7443	1"-1.5" Spa Side Remote 4 Function 150'
CALL	JND7953	7953	OneTouch Control Panel Complete
CALL	JND6614APL	6614AP-L	PureLink Power Center Sub-Panel
	JNDIQPUMP01	IQPUMP01	Jandy Mobile Pump Interface

AquaLink® PDA

All items cataloged are normally stocked unless noted.
Not Stocked ✻ While Supplies Last

QUALITY POOL SUPPLY

Code	New Product Number	Old Product Number	Description
			Time Clocks Many additional Intermatic Pool & Spa Control Centers and Electrical panels are Available by Special Order. Please Call.
	ITMT101P3	T101P3	**Basic Time Clock** 120 Volt, Single Pole, Single Throw 40 Amp Maximum.
	ITMT101M	T101M	24 hour SPST replacement switch mechanism for T101P3 (120V clock monitor)
	ITMT104P3	T104P3	**Basic Time Clock** 208-277 Volt, Double Pole, Single Throw 40 Amp Maximum.
	ITMT104M	T104M	24 hour DPST replacement time switch mechanism for T104P3 (208-277V clock monitor)
	ITMT101P201	T101P201	**Time Clock with built-in Fireman Switch** 120 Volt, Single Pole, Single Throw. 40 Amp Maximum. Turns Pool Heater off 20 minutes before the pool pump turns off. This helps to save the heat exchanger and reduce scale & lime deposits.
	ITMT104P201	T104P201	**Time Clock with built-in Fireman Switch** 208-277 Volt, Double Pole, Single Throw, 40 Amp Maximum
	ITM156T4042A	156T4042A	**Fireman Switch**
	ITM156T1978A	156T1978A	Extra **tripper set** for T Series (one on, one off)
	ITMFF60MC	FF60MC	**60 Minute Spring Wound SPST Timer**
	ITMP1101	P1101	**All-Season Outdoor Timer** **15 Amp** with 2 on & off settings per day. Grounded 2' cord and see-through window for easy timer viewing. Heavy duty plastic case. UL Approved. Plug and Receptacle
	ITMP1131	P1131	**All-Season Outdoor Timer** Same as above except **20 Amp.** These heavy-duty outdoor timers are specially to control a filter pump for pool or spa, but they can also be used to turn ON and OFF outdoor decorations, engine block heaters and other appliances. Plug and Receptacle
	ITMT21004R	T21004R	**60 Amp Control Center** 120/240V Double Pole, Single Throw Features an all-weather enclosure and contains a 4 circuit breaker base, equipment grounding bar, and mechanical timer mechanism. The enclosure has provision for installing additional switches or GFCI receptacles on the side and inside.

All items cataloged are normally stocked unless noted.

Not Stocked ✻ While Supplies Last

Code	New Product Number	Old Product Number	Description
INTERMATIC®		**Electronic Control**	
CALL	ITMPE653RC	PE653RC	**Multiwave Control System** Wireless control for pool/spa equipment • Controls 5 circuits • Operates single, two, and variable-speed pumps • 24 hour timing with 3 ON/OFF events per circuit • Controls Lights, Pumps, Heaters, and Cleaners
	ITMPE140	PE140	**Time Switch and Pool/Spa Actuator Control** *(Intermatic)*
		Surge Protector	
	ITMPS3000	PS3000	**Pool & Spa Surge Protector** • 120/240 VAC • Single split phase • For use on a variety of Pool & Spa Equipment • Connects to existing electrical panel

All items cataloged are normally stocked unless noted.
Not Stocked ✻ While Supplies Last

Code	New Product Number	Old Product Number	Description
			FLEXFLO® Peristaltic Metering Pump Now with tube failure detection system
	BWHA1A47T	A1A4-7T	0.1-100 gallons / day • Pressures to 40 PSI • 0.02 to 100 GPD • Patented Tube Failure Detection • Accurate touchpad and display • Remote Start/Stop • Heavy-duty rotor • NSF 50 Listed
			Single Head Adjustable Output Pumps
	STN45MJL5A1STAA	45M5	• 2.5 - 50 gallons / day (.5 - 10 GPD with 45-2 tube) • Low Pressure Applications up to 25 PSI • Snap Together Modular Design • Patented Mechanical Control • Easy to Change Tubes • Corrosion Resistant Mounting Bracket • Spare Tube Assembly Included
	STN85MJH2A1STAA	85MHP17	• Same features as the 45M5 • 0.8 - 17 GPD with 45-2 tube • With simple tube change (45-5 tube) this model will pump 4.5 - 85 GPD • High Pressure Applications up to 100 PSI • For Stenner Parts see page 300

All items cataloged are normally stocked unless noted.

Not Stocked ✻ While Supplies Last

Code	New Product Number	Old Product Number	Description
			IntelliChem™ Chemical Controller IntelliChem can work independently or in conjunction with other Pentair automation products. It's built-in Langelier Saturation Index calculator lets pool owners know when the water is in or out of balance.
CALL	PEN521357	521357	**IntelliChem with no pumps** For systems using external feed pumps, IntelliChlor, or CO2. (only stocked in Byron Center)
	PEN521378	521378	4 Gallon Acid Container (for above)
	PEN521397	521397	4 Gallon Chlorine Container (for above)
	PEN714000070	714000070	**CO2 Kit w/Diffuser,** Must use with CO2 tanks to lower pH levels. Solenoid, Regulator
			GFCI Breaker • Designed to protect against ground faults in AC, DC and mixed AC/DC systems where levels exceed 6 milliamps • Meets NEC 2008, Article 680 wiring requirements for pool and spa pumps • Available in 15 and 20 amp versions • GFCI compatible with IntelliTouch® and EasyTouch® control systems • Works in any breaker base approved for use with Siemens QPF style breaker
	PENPA220GF	PA220GF	2 Pole 20 Amp GFCI
			Brominator Parts: Model CB, RB & CR Parts
	NCH25491	25491	3/4" Couplings
*	NCH25475	25475	Lid O-ring
*	NCH25484	25484	Buna-n-Gasket ONLY
*	CMP90210	9-0210	IU-206 Standard Parts bag
	CMP9021011	9-0210-11	Universal 2" injector manifold parts bag
*	CMP7143401	7-1434-01	Injector Barb for IV-201, 206, and 211-Black

All items cataloged are normally stocked unless noted.
Not Stocked * While Supplies Last

QUALITY POOL SUPPLY

Code	New Product Number	Old Product Number	Description

HAYWARD

Hayward Feeder Parts

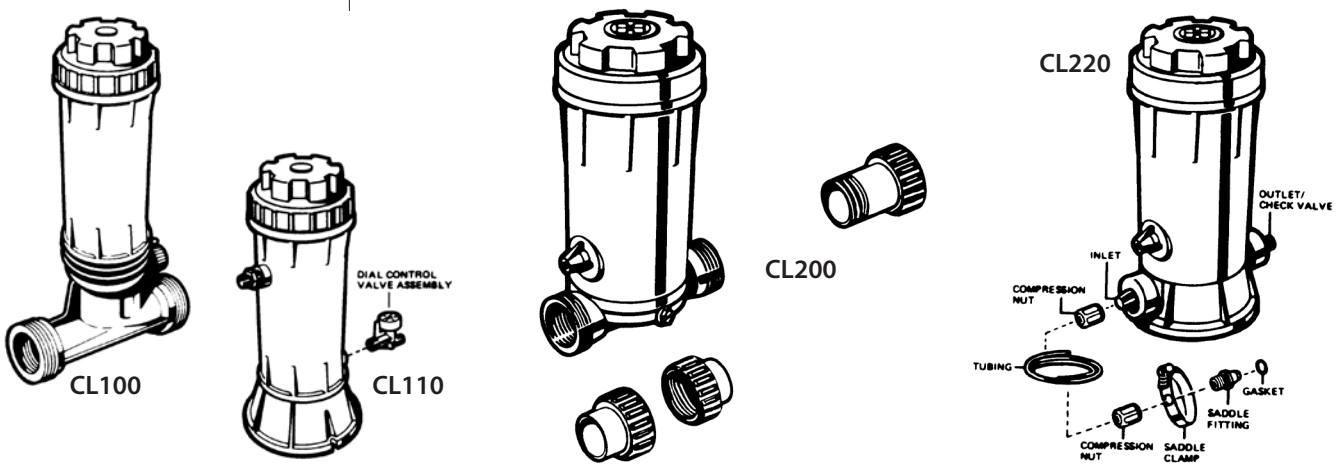

		CL100 and CL110 Chlorine Feeders	
	HPPCLX110C	CLX110C	Cover
	HPPCLX110K	CLX110K	O-ring - Viton
	HPPCLX110DA	CLX110DA	Dial Control Valve Assembly
✻	HPPCLX110FA	CLX110FA	Control Knob Assembly (CL100)
		CL200 & CL220 Chlorine Feeders	
	HPPCLX200EGA	CLX200EGA	Center Cap with Cover Retaining Screw & Slip Washer
	HPPCLX200C	CLX200C	Cover Cap
	HPPCLX200CA	CLX200CA	Cover & Cap Assy. with o-ring
	HPPCLX200B	CLX200B	Cover
	AEQO231V	O-231V	O-ring - Viton (CLX200K)
	HPPCLX200K	CLX200K	O-ring - Viton (OEM)
	HPPCLX200H	CLX200H	Feeder Tube
	HPPCLX200PA	CLX200PA	Control Knob Assy. with o-rings (viton)
	HPPSPX1700FG	SPX1700FG	Drain Plug with Gasket
	HPPCLX220B	CLX220B	Base (CL220)
	HPPCLX220EA	CLX220EA	Check Valve & Inlet Fitting Adapter Assembly
	HPPCLX220GA	CLX220GA	Saddle Fitting Assembly with nut, gasket, saddle clamp & 4' tubing
	HPPCLX220J	CLX220J	8' Chlorinator Tubing
	HPPCLX220HPAK4	CLX220H	Compression Nut
	HPPCLX220P	CLX220P	¼" Adaptor Fitting
	HPPSP1500UNPAK2	SP1500UNPAK2	Female Union End Connector Pak
	HPPSP1500UNMPAK1	SP1500UNMPAK1	Male Union End Connector Pak

All items cataloged are normally stocked unless noted.
Not Stocked ✻ While Supplies Last

Code	New Product Number	Old Product Number	Description

PENTAIR

High Capacity Automatic Feeders

Models HC-3315, HC-3330, HC-3340

			Item	Qty.	
	PENR172214	R172214	1	1	Lock ring
	PENR172385	R172385	2	1	Lid assembly complete
	PENR172224	R172224	3	1	Vent Valve
	PENR172221	R172221	4	1	O-ring vent valve
	PENR172240	R172240	5	1	O-ring lid to housing
	PENR172375	R172375	6	1	Lock screw
	PENR172374	R172374	7	1	Lock spring
	PENR175251	R175251	8	1	Screen
	PENR172435	R172435	9	1	Check ball
	PENR270484	R270484	11	1	1" close nipple
	PENR270531	R270531	12	2	1" Threaded union
	PENR172439	R172439	13	1	Control Valve
	PENR172036	R172036	14	1	Silicone lubricant, ¾ oz.
	PENR172288	R172288	15	Opt.	1-1½" - 2" Check Valve
	PENR175009	R175009	16	1	Hose Bib w/t Handle ½"
	PENR172134	R172134	17	1	½" threaded plug
	PENR172082	R172082			Flow Rate Indicator

All items cataloged are normally stocked unless noted.
Not Stocked ✻ While Supplies Last

Code	New Product Number	Old Product Number	Description

PENTAIR

Residential BioShield® UV Sterilizer

Models HC-3315, HC-3330, HC-3340

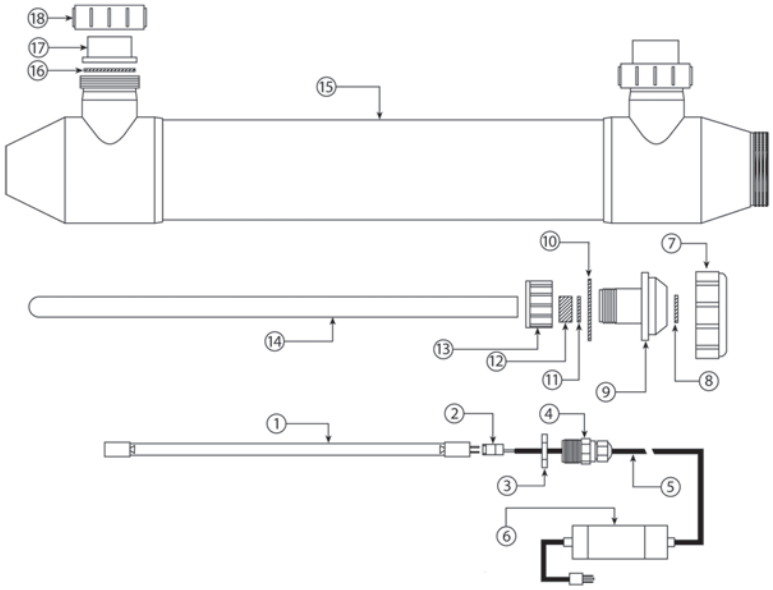

			Item	Qty.
	PEN523035	523035	1	50 Watt UV Lamp for Model #522935
	PEN523036	523036	1	80 Watt UV Lamp for Model #522936
	PEN523037	523037	1	120 Watt UV Lamp for Model #522937
	PEN523038	523038	1	150 Watt UV Lamp for Model #522938 and #522945
	PEN523034	523034	2	4-Pin Lamp Connector
	PEN523121	523121	7	Black Retaining Nut
	PEN523039	523039	14	Quartz Sleeve 22.25" for Model #522935
	PEN523040	523040	14	Quartz Sleeve 38.25" for Model #522936
	PEN523041	523041	14	Quartz Sleeve 50.75" for Model #522937
◆	PEN523042	523042	14	Quartz Sleeve 65.00" for Model #522938 and #522945
	PEN523110	523110	15	50 Watt UV Sterilizer Housing
	PEN523111	523111	15	80 Watt UV Sterilizer Housing
	PEN523112	523112	15	120 Watt UV Sterilizer Housing
	PEN523113	523113	15	150 Watt UV Sterilizer Housing
		Kits		
	PEN523013	523013	Air Relief Kit	
	PEN523032	523032	Ballast Assembly for Model # 522935-522637	
	PEN523033	523033	Ballast Assembly for Model # 522638	
		523053	Ballast Assembly for Model # 522945	
	PEN523054	523054	Quartz Sleeve Module - All Models (Includes Item # 9, 10, 11, 12,13)	
	PEN523148	523148	Union Assembly for Models # 522638-522945 (3")	
	PEN523031	523031	Seal Kit - All Models (Includes Item # 8, 10, 11, 12, 16)	

All items cataloged are normally stocked unless noted.

Not Stocked ✻ While Supplies Last

Rainbow Feeder Parts

Model 320

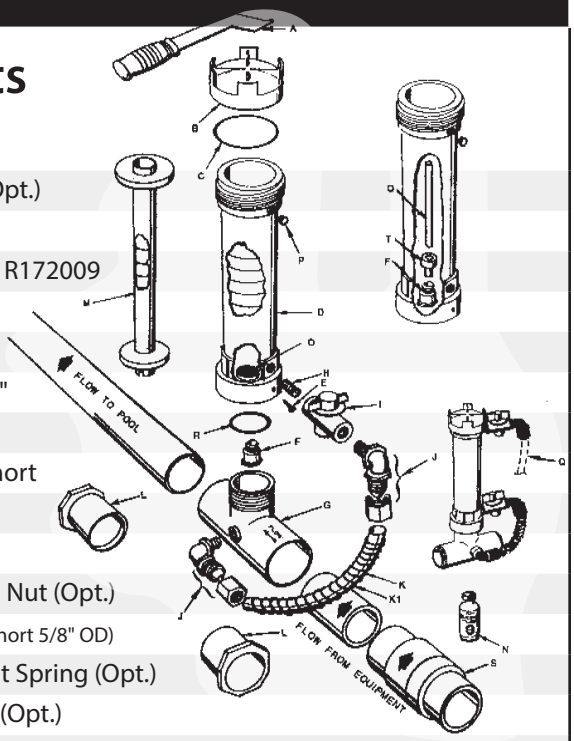

Code	New Product Number	Old Product Number	Description
	PENR172052	R172052	A Cap Wrench (Opt.)
	PENR172008	R172008	B 3" Cap-white
	AEQO283	O-283	C Cap O-ring R172009
	PENR172321	R172321	D Body Only
	PENR01052	R01052	E Lock Screw
	PENR172248	R172248	F Check Valve, ½"
	PENR172317	R172317	G Diverter Tee
	PENR172256	R172256	H Nipple ½" X Short
	PENR172086	R172086	I Control Valve
	PENR172272	R172272	J Ell 90 with nut
	PENR172274	R172274	J-1 Compression Nut (Opt.)
	PENR172091	R172091	K Feeder Tube (Short 5/8" OD)
	PENR171097	R171097	K-1 Tube Support Spring (Opt.)
	PENR172037	R172037	M Spa Chamber (Opt.)
	PENR172036	R172036	N Silicone Lubricant
	PENR172134	R172134	P ½" MPT Plug
	PENR172253Z	R172253Z	Q Feeder Tube ⅝" X 18" Top Feed
	AQPAPCO2280	O-444	R Bottom o-ring R172319
	PENR172288	R172288	S Corrosion Resistant Check Valve (Opt.)
	PENR172048B	R172048B	T Stand Pipe Adapter

Model 300

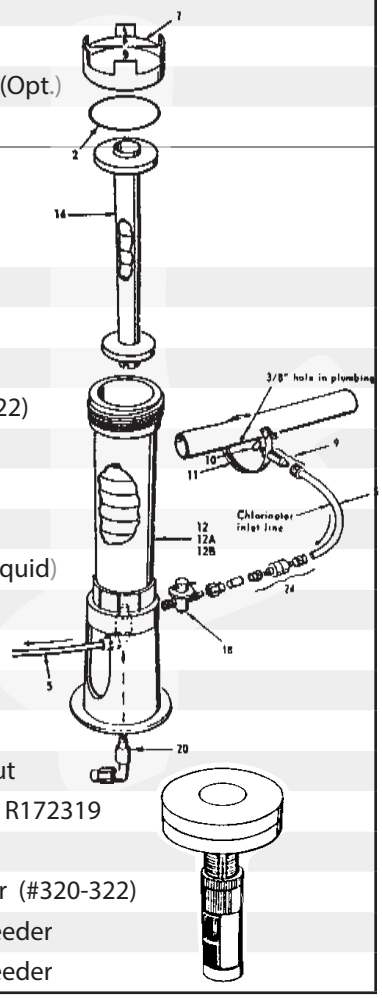

Code	New Product Number	Old Product Number	Description
	PENR172008	R172008	1 3" Cap-white
	AEQO283	O-283	2 Cap O-ring R172009
	PENR172023	R172023	5 3/8" x 8' Tubing #300
	PENR172091	R172091	5 5/8" x 7 1/4" Tubing (#320-322)
	PENR172032	R172032	9 Tube Fitting with nut
	PENR172033	R172033	10 Gasket
	PENR172034Z	R172034	11 Saddle Clamp ONLY
	PENR172036	R172036	3/4 oz. Silcone Lubricant (liquid)
	PENR172052	R172052	Cap Wrench (Opt.)
	PENR172060	R172060	18 Control Valve 1/4" NPT
	PENR172061	R172061	20 Check Valve/Elbow
	PENR172064	R172064	Parts Bag (#300)
	PENR172272	R172272	1/2" MPT X Tube ell with nut
	AQPAPCO2280	O-444	Bottom O-ring (#320-322) R172319
	PENR172323	R172323	24 1/4" Check Valve (Opt.)
	PENR172331	R172331	Check Valve with restrictor (#320-322)
	PENR18855	R18855	Screen for **335** Floating Feeder
	PENR18856	R18856	Screen for **330** Floating Feeder

All items cataloged are normally stocked unless noted.
Not Stocked ✻ While Supplies Last

QUALITY POOL SUPPLY

King TECHNOLOGY

Inground Systems

#400, #430, #940, #960, #980, 01-01-5480, 01-01-5490, 01-01-5450 & Hybrid systems.

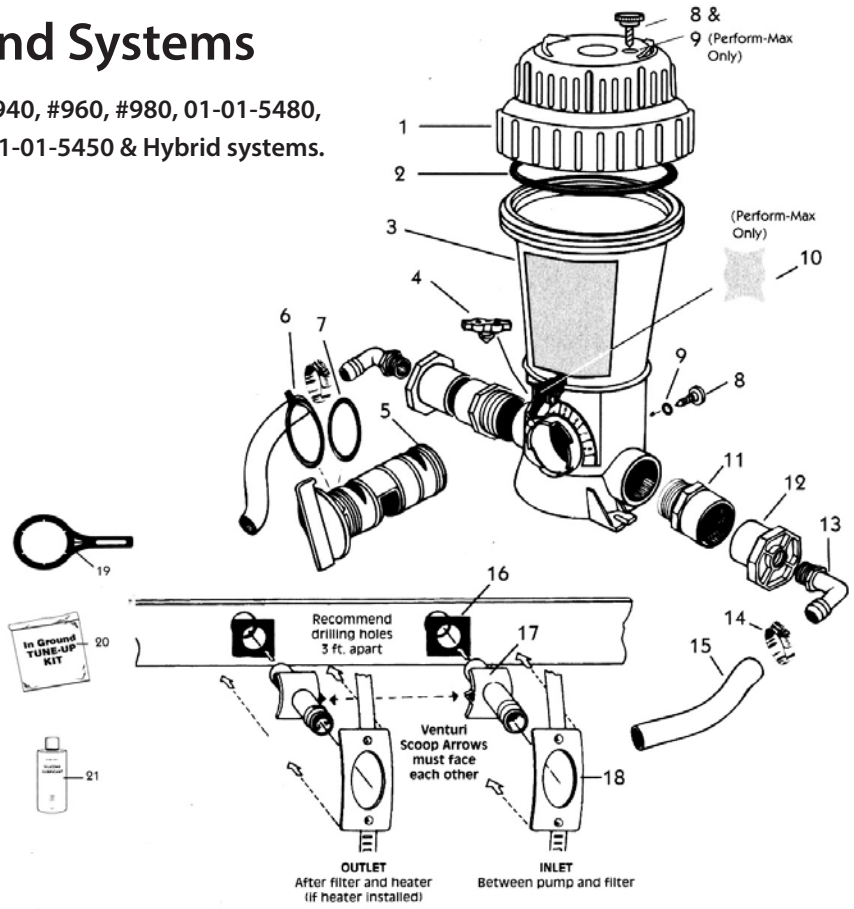

Code	New Product Number	Old Product Number		Description
	FRG2747012	KT01-22-9411	1, 2	Cap with O-ring (Perform Max Models - Includes Knob)
	FRG01229922	KT01-22-9920	2	Cap O-ring Only
	FRG01229420	KT01-22-9420	2	Cap O-ring (1991 & older - 940, 960, 980)
		N/A	3	Body
	FRG2770388	KT01-22-9480	4	Pressure Relief Valve
	FRG2756143	KT01-22-9440	5, 6, 7	Control Dial Assembly
	FRG2758334	KT01-22-9450	6, 7	Control Dial O-ring Set
	FRG2938399	KT01-22-9940	8, 9	Knob With O-ring
	FRG01229623	KT01-22-9623	8, 9	Knob with O-ring (1991 & older - 940, 960, 980)
	FRG2835036	KT01-22-9660	10	Screen (Perform Max Only)
	S4PMA020	436-020	11	2" Male Adaptor
	FRG01228620	KT01-22-8620	12*	2" x 1/2" Bushing
	FRG01227800	KT01-22-7800	13*	90° Elbow 1/2"
		KT01-22-7690	14*	Small Clamp
	FRG2119890	KT01-22-7700	15*	6" PVC Tubing 5/8" ID
	FRG2173946	KT01-22-7850	16*	Scoop Gasket
	FRG01227790	KT01-22-7790	17*	Venturi Scoop
	FRG2195860	KT01-22-7910	18*	Scoop Clamp
	FRG2547955	KT01-22-8870	19	Cap / Control Dial Tool
	FRG2940225	KT01-22-9950	20	IG Tune-Up Kit (Keys 2, 6, 7, 8, 9, 21)

All items cataloged are normally stocked unless noted.

Not Stocked ✻ While Supplies Last

* For Offline Cyclers

Above Ground Systems

01-01-0120 & 01-01-6180

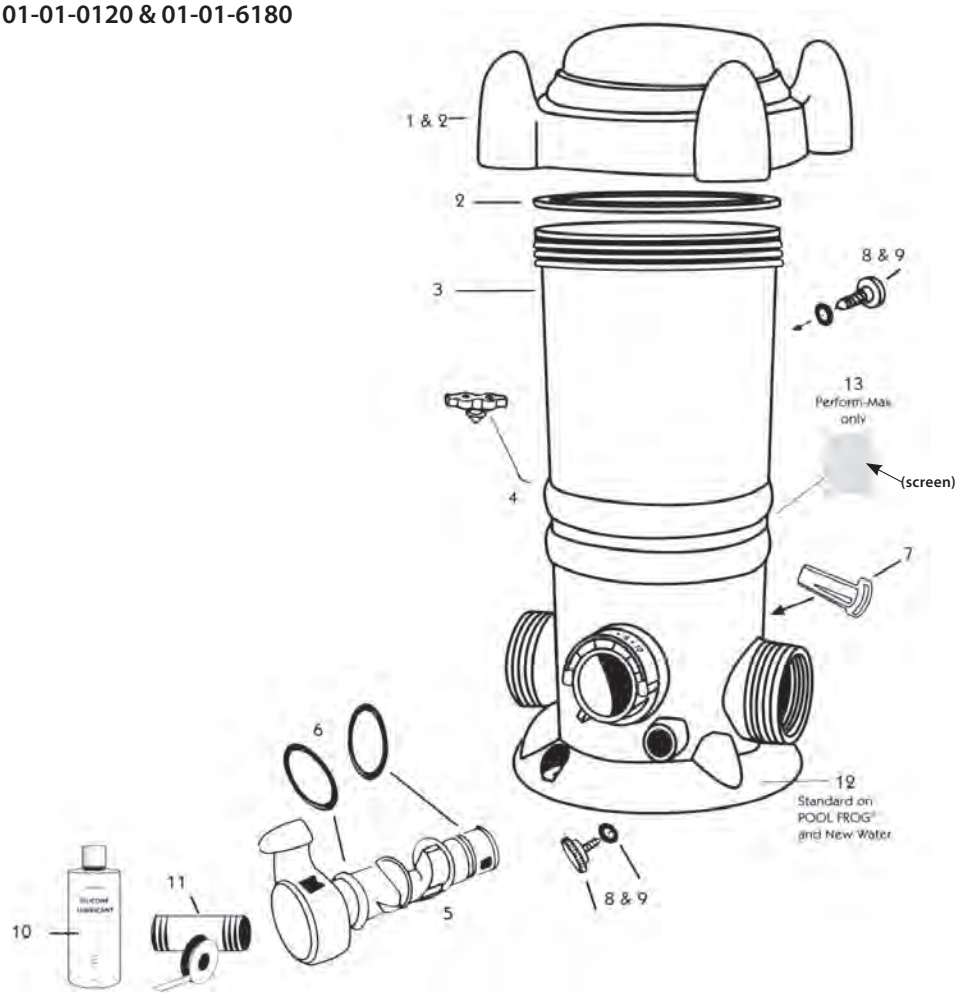

Code	New Product Number	Old Product Number		Description
	FRG01221428	KT01-22-1418	1, 2	Cap with O-ring
	FRG8058	KT01-22-1920	2	Cap O-ring Only
		N/A	3	Body
	FRG2770388	KT01-22-9480	4	Pressure Relief Valve
	FRG01221448	KT01-22-1448	5, 6, 7	Control Dial Assembly
	FRG01221450	KT01-22-1450	6	Control Dial O-ring Set Only
	FRG2938399	KT01-22-9940	8, 9	Knob with O-ring
	FRG01229972	KT01-22-9972	10	Silicone Lubricant
CALL	FRG01221711	KT01-22-1710	11	Nipple Installation Kit
	FRG2835036	KT01-22-9660	13	Screen - For 920 Only
	FRG01221440	KT01-22-1440	5, 6, 7	Control Dial Assembly for Discontinued Cyclers

QUALITY POOL SUPPLY

King TECHNOLOGY

SANI KING

PERFORM-MAX

Feeder Parts

Code	New Product Number	Old Product Number	Key No.	Description	Fits Models
	FRG2747012	KT01-22-9411	1 & 2	Cap with O-ring & Knob	#940, 960, 980
	FRG2745185	KT01-22-9417	1 & 2	Cap with O-ring	#400,430, 5400, 5430, 5450, 6425, 6440, 6470
	FRG01229922	KT01-22-9920	2	O-ring only	#940, 960, 980, 400, 5480, 5490
	FRG01229420	KT01-22-9420	2	Body O-ring (1991 and Prior Years)	#940, 960, 980
		N/A	3	Body	
	FRG2770388	KT01-22-9480	4	Pressure Relief Valve	All Models
	FRG2756143	KT01-22-9440	5,6 & 7	Control Dial with O-ring Kit	All Models
	FRG2758334	KT01-22-9450	6 & 7	Control Dial O-ring Kit	#940, 960, 980, 400, 5400
	FRG2938399	KT01-22-9940	8 & 9	Knob with O-ring	#940, 960, 980, 100, 400
	FRG01229623	KT01-22-9623	8 & 9	Knob with O-ring (1991 and Prior Years)	#940, 960, 980
	FRG2835036	KT01-22-9660	10	Screen	#940, 960, 980
	S4PMA020	436-020	11	2" Male Adapter	#940, 960, 980, 5400
	FRG01228620	KT01-22-8620	12	2" x ½" Bushing	#940, 960, 980
	FRG01227800	KT01-22-7800	13	½" 90 Elbow	#940, 960, 980
		KT01-22-7690	14	Small Clamps	#940, 960, 980
	FRG2119890	KT01-22-7700	15	6' PVC Tubing	#940, 960, 980
	FRG2173946	KT01-22-7850	16	Scoop Gasket	#940, 960, 980
	FRG01227790	KT01-22-7790	17	Venturi Scoop	#940, 960, 980
	FRG2195860	KT01-22-7910	18	Scoop Clamp	#940, 960, 980
	FRG2547955	KT01-22-8870	19	Cap/Control Dial Tool	#940, 960, 980,400, 5400
	S4PBHMF251	439-251		2" x 1½" MPT X FPT	
	FRG01229972	KT01-22-9972	21	Silicone Lubricant	All Models
	FRG2940225	KT01-22-9950		IG Tune-up Kit and Dial O-ring *Both*	

All items cataloged are normally stocked unless noted.

Not Stocked ✻ While Supplies Last

Code	New Product Number	Old Product Number	Description	
		Chemical Pump Parts		
		FLEXFLOW A-100N		

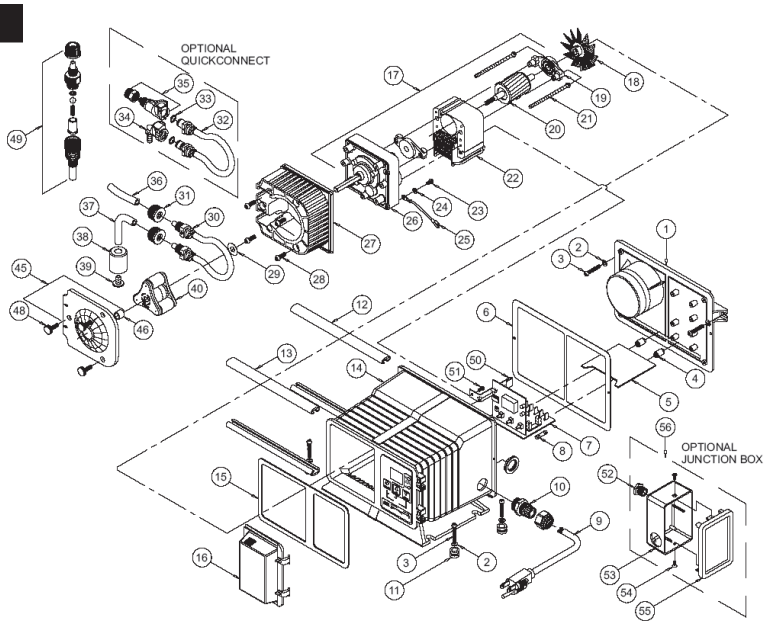

		Flexflow A-100 Parts (Not Shown - Peristaltic Type)		
	BWHC3306	C-330-6		⅜" Tube Nut
	BWHC326VPP	C-326V-PP		Viton Poppet
✻	BWHC5251	C-525-1		Pump Head - Clear
	BWHC345A	C-345A		Foot Valve/Strainer
	BWHC395N6A	C-395N-6A		Check Valve
	BWHC525K61E	C-525K6-1E		Repair Kit - for complete overhaul of water end of pump
	BWHT1404V	T140-4V		¼" Injector fitting with pipe clamp for 1¼", 1½" & 2" pipe
	BWHT1406V	T140-6V		⅜" Injector fitting with pipe clamp for 1¼", 1½" & 2" pipe
		Flexflow A-100N Parts (Peristaltic Type)		
	BWHC612PB	C-612PB	19	Bearing Bracket with Bearing
	BWHA002N4T	A-002N-4T	30	Pump Tube, ¼" O.D. Compression Barb Type
	BWHa16t	A1-6T	30	Pump Tube, ⅜" O.D. Compression Barb Type
	BWHa17t	A1-7T	30	Pump Tube, 7⁄16" O.D. Compression Barb Type - New Style
	BWHC3306	C-330-6	31	Nut, Tube Compression Type, .37 O.D. Tubing
	BWHC3356	C-335-6	36	Tubing Outlet .37 O.D. X 5' Polyethylene
	BWHC346	C-346	38	Weight, Inlet Tubing, Ceramic
CALL	BWH71000159	71000-159	40	Roller Assy. for ¼" and ⅜" OD Norprene Tubes (White Rollers) (-4 and -6 pumps)
CALL	BWH71000350	71000-350	40	Roller Assy. for -1, -2, -3, -4, -6 and -7 Pumps
		C-1500LP Parts (Not Shown - Diaphragm Type)		
	BWHA001	A-001		Cover
	BWHA0026	A-002-6		⅜" Vinyl Replacement Tube
	BWHA003	A-003		Roller Assembly
	BWHA005	A-005		Pump Head
CALL	BWHFI1006V	FI-100-6V		In-Line Flowmeter (for ⅜" tubing)

All items cataloged are normally stocked unless noted.
Not Stocked ✻ While Supplies Last

QUALITY POOL SUPPLY

The First And Still The Finest Peristaltic Pumps

Stenner Chemical Pump Replacement Parts

Code	New Product Number	Old Product Number	Description
	STNQP2521	QP252-1	QuickPro Pump Head #2 - fits 85MHP17
	STNQP2551	QP255-1	QuickPro Pump Head #5 - fits 45M5
	STNQP5001	QP500-1	QuickPro Roller Assembly
	STNQP1001	QP100-1	QuickPro Pump Head Cover
	STNUCCP202	UCCP202	45-2 High Pressure Tube Assembly (Each)
	STNUCCP205	UCCP205	45-5 Low Pressure Tube Assembly (Each)
	STNAK4002W	AK4002W	¼" x 20' Lead Tube
	STNAK4010W	AK4010W	¼" x 100' Lead Tube
✻	STNUC3ASYD	UC3ASYD	Roller Assembly
	STNUCFC5HO	UCFC5HO	Variable Cam
✻	STNUCFC5L1	UCFC5L1	Index Pin Lifter Only
	STNUCINJ38	UCINJ38	Injection check valve ⅜"
	STNUCDBINJ	UCDBINJ	Injection Check Valve ¼"
	STNUCAK100	UCAK100	Connecting Nut ¼"
	STNUCAK200	UCAK200	Ferrule ¼"
	STNMCADPTR	MCADPTR	Connecting Nut ⅜" with adapter
	STNMANUT00	MANUT00	Connecting Nut ⅜"

All items cataloged are normally stocked unless noted.

Not Stocked ✻ While Supplies Last

Code	New Product Number	Old Product Number	Description

Delta UV Ultraviolet Solutions

www.deltauv.com

Delta UV Systems

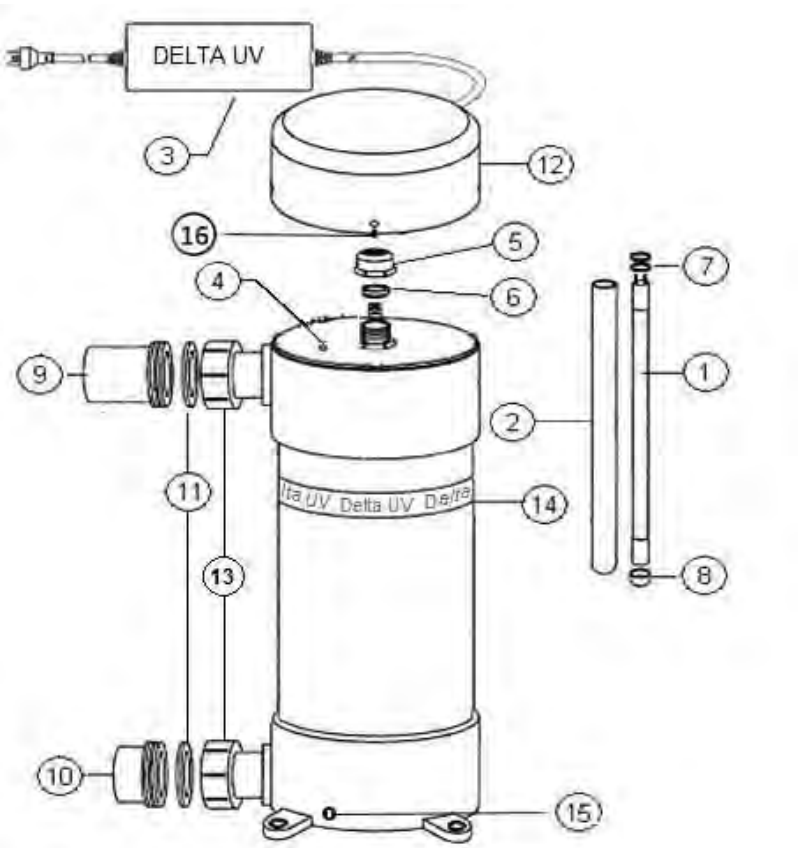

			Key	
	DUV7018440	70-18440	1	Replacement Lamp for D-110 and E-110
	DUV7018420	70-18420	1	Replacement Lamp for D-80 and E-80
	DUV5850340	58-50340	2	Delta UV Quartz Tube for E/D-110 Models 1" Tube
	DUV5850320	58-50320	2	Delta UV Quartz Tube for E/D-80 Models 1" Tube
	DUV7010420	70-10420	3	Ballast for "E" Series Units
	DUV7010419	70-10419	3	Ballast for "D" Series Units
	DUV8602417	86-02417	5	Quartz Tube Acorn Nut
	DUV4402018	44-02018	6	Quartz Tube Sealing
	DUV4402221	44-02221	7	Bulb O-ring
	DUV8602402	86-02402	9	Union Tail Piece -2" Nut X 2" Socket ⅛" NPT Gauge Tap - Clear
	DUV8602352	86-02352	10	Union Tail Piece -2" Nut X 2" Socket - White
	DUV4402335	44-02335	11	Flat O-ring Gasket - 2"
	DUV4050051	40-50051	n/s	Nut lock 1" black

NOTES

INDEX

Leaf Skimmers 318
Parts 328
Pole Accessories 317
Pool Brushes 318
Reagents 311
Super Duty Poles 322
Spin Lab & Disks 308
Taylor Test Kits 312
Thermometers 324
Telescopic Poles 314
Test Kits 310
Test Strips 306
Vacuum Heads 316
Vacuum Hose 326
Vacuum Poles 317

QUALITY POOL SUPPLY

Code	New Product Number	Old Product Number	Description
AquaChek POOL AND SPA TEST STRIPS		**Test Strips**	
	HAC511244	511244	**Yellow 4-in-1** 50 strips 160 / Case Tests for Free Chlorine, pH, Cyanuric Acid & Total Alkalinity
	HAC521253	521253	**Red 4-in-1** 50 strips 160 / Case Tests for Total Bromine, pH, Total Hardness & Total Alkalinity
	HAC562701	562701	**DPD Pro 3-way Test Strip Refill** Tests for Total Chlorine, Total Bromine, Free Chlorine, pH
	HAC562801	562801	**DPD Pro 4-way Test Strip Refill** Tests for Low Range Hardness, High Range Hardness, Cyanuric Acid, Total Alkalinity
AquaChek TruTest Pool & Spa Test Strips		**Test Strips**	
	HAC542228	542228	**Salt System Kit** 12 / Case • Contains 10 Salt Titrator Strips • 25 4-Way Strips for Chlorine, pH, Total Alkalinity and Cyanuric Acid
	HAC2510400	2510400	**TruTest Digital Test Strip Reader** Digital Test strip reader tests for Free Chlorine, pH and Total Alkalinity. Includes 25 TruTest Digital Test Strips and Digital Reader in a clamshell package. Instruction and Pool Care Guide included. • Water Resistant • Memory Function stores the last 9 test reults • Requires 2 AA batteries (Not Included) • MUST use TruTest Digital Test Strips ONLY to work (512082)
	HAC512082	512082	**TruTest Digital Test Strips** (50 Strips/Bottle) 12 Blister Carded bottles/case

All items cataloged are normally stocked unless noted.

Not Stocked ✻ While Supplies Last

AquaChek POOL AND SPA TEST STRIPS

Test Strips

Code	New Product Number	Old Product Number	Description
	HAC541604APP	541604APP	**Select 7-in-1** 50 strips 6 / Case Test for total chlorine, free chorline, total alkalinity, pH, total bromine, cyanuric acid and total hardness. Includes pool & spa care booklet. New Select Connect App functionality.
	HAC541640APP	541640APP	**Select Refill** 50 strips 6 / Case New Select Connect App functionality.
	HAC511710	511710	**Pro 5-in-1 Test Strips** 100 strips 12 / Case Measures total chlorine, total bromine, free chlorine, pH and total alkalinity.
	HAC561625A	561625A	**Blue** 25 strips 12 / Case Tests for biquanide (Baquacil® or SoftSwim™), pH, and total alkalinity.
	HAC551236	551236	**Silver 7-in1** 100 strips 6 / Case Test for total chlorine, free chlorine, total alkalinity, pH, total bromine, cyanuric acid and total hardness.
	HAC661454E	661454	**Copper** 25 strips 6 / Case
	HAC661455E	661455	**Iron** 25 strips 6 / Case
	HAC561682	561682	**Monopersulfate** 50 strips 12 / Case
	HAC512084	512084	**AquaCheck Pro II Test Strips** Water test strips for cyanuric acid, TDS, LR hardness and HR hardness.
	HAC561141	561141	**White Salt Titrators** 10 strips 160 / Case
	HAC562012	562012	**Borate Test Kit** 25 strips 6 / Case
	HAC561219	561219	**Cyanuric Acid Test Strips** 25 strips 6 / Case Measures Stabilizer (cyanuric acid)
	HAC561683	561683	**TDS Test Strips** 25 strips 6 / Case Measures total dissolved solids.
	HAC562227	562227	**Phosphate Test Kit** 20 Tests 6 / Case

541640APP

511710

561625A

551236

661454

661455

561682

512084

561141

562012

561219

561683

562227

All items cataloged are normally stocked unless noted.
Not Stocked ✻ While Supplies Last

Code	New Product Number	Old Product Number	Description
LaMotte *Not stocked in Waterford or Akron WaterLink SpinTouch			**WaterLink Spin Lab Professional Water Analysis**
	LMO3581	LAM3581	**Mobile Waterlink Spin Touch Lab** with Carrying Case - Touchscreen Operation - Reliable Results - Virtually Eliminates User Error - Super Fast & Simple - Results in 60 seconds for 10-Test Disks
			WaterLink Spin Lab Spin Disks for Water Testing • Store up to 3 pool & 2 spa chemical lines • Program stores data of each customers pool or spa
CALL	LMO4335H	LAM4335-H	**Chlorine/Bromine 3-Test Disk (50 Disks/Box)** Tests Free Chlorine, Total Chlorine, Bromine, pH, Combined Chlorine (calculated), and pH. (Stocked in Akron only)
	LMO4328H	LAM4328-H	**Chlorine/Bromine Disk (50 Disks/Box)** Tests Free Chlorine, Total Chlorine, Bromine, pH, Calcium Hardness, Total Alkalinity, Copper, and Iron.
	LMO4329H	LAM4329-H	**Chlorine/Bromine Plus Phosphate Disk (50 Disks/Box)** Tests Free Chlorine, Total Chlorine, Bromine, pH, Calcium Hardness, Total Alkalinity, Copper, Iron, and Phosphate.
CALL	LMO4330H	LAM4330-H	**Chlorine/Bromine Plus Borate Disk (50 Disks/Box)** Tests Free Chlorine, Total Chlorine, Bromine, pH, Calcium Hardness, Total Alkalinity, Copper, Iron, and Borate.
	LMO4331H	LAM4331-H	**Biguanide Plus Borate Disk (50 Disks/Box)** Tests Biguanide, Biguanide Shock, pH, Calcium Hardness, Total Alkalinity, Copper, Iron, and Borate.

All items cataloged are normally stocked unless noted.

Not Stocked ✻ While Supplies Last

Code	New Product Number	Old Product Number	Description
LaMotte *Not stocked in Waterford or Akron		**Photometer Kit**	
	LMO2087	LAM2086	ColorQ 2x PRO 7 Kit (NEW- not stocked)
LaMotte *Not stocked in Waterford or Akron		**Test Strips**	
	LMO297624	LAM2976-24	**Insta-TEST 3** 50 Strip Bottle 24/Case Free Chlorine, Free Bromine, pH,Total Alkalinity.
	LMO297612	LAM2976-12	**Insta-TEST 3** 50 Strip Bottle 12/Case Free Chlorine, Free Bromine, pH, Total Alkalinity.
	LMO297712	LAM2977-12	**Insta-TEST 5** 50 Strip Bottle 12/Case Total Chlorine, Free Chlorine, Free Bromine, pH, Total Alkalinity, Total Hardness.
	LMO3021G6	LAM3021-G-6	**Phosphate Test Strips** 25 Strip Bottle 6/Case
LaMotte *Not stocked in Waterford or Akron		**DPD Testing Tablets** Card of 10 Tablets 100 Cards / Case	
	LMO6999AM	LAM6999A-M	DPD #1R (Fast Dissolving)
	LMO6905AM	LAM6905A-M	DPD #3
LaMotte *Not stocked in Waterford or Akron		**Test Tablets** *The following are sold by the box only (1000 Total Tablets)*	
✻	LMO4318J	LAM4318-J	Total Alkalinity (Box of 100)
✻	LMO4309J	LAM4309-J	Hardness (Box of 100)
✻	LMO4310J	LAM4310-J	pH Phenol Red (Box of 100)
✻	LMO4311J	LAM4311-J	Free Chlorine (Box of 100)
✻	LMO4315J	LAM4315-J	Iron (Box of 100)

QUALITY POOL SUPPLY

Code	New Product Number	Old Product Number	Description
			Chlorine Test Kits
	PENR151076	R151076	**Chlorine & pH** ½ oz. reagents.
	PENR151186	R151186	**All-In-One** 1 oz. reagents. Tests chlorine, pH, acid demand & total alkalinity.
	PENR151248	R151248	**DPD Plus, All-In-One Kit** Test for free, total and combined Chlorine, Cyanuric Acid, pH, Acid Demand, and Total Alkalinity, Lucite test cell, 50 each DPD No. 1 and No. 3 tablets, 10 Cyanuric acid tablets, 1 oz. No. 2, No. 3, ½ oz. No. 3B, No. 4, No. 5.
	PENR151226	R151226	**Cyanuric Acid Test Kit** with 8 oz. reagent.
	PENR151716	R151716	**Professional Test Kit** Test for free chlorine (DPD tablets), total and combined chlorine or bromine, pH, acid demand, total alkalinity, water hardness & cyanuric acid.
			Bromine Test Kit
	PENR151196	R151196	**Bromine & pH** ½ oz. reagents.

All items cataloged are normally stocked unless noted.

Not Stocked ✻ While Supplies Last

Test Kit Reagents

Phenol Red contains chlorine neutralizer (sodium thiosulfate)

Code	New Product Number	Old Product Number	Description		
	PENR161004	R161004	½ oz.	OTO (Chlorine / Bromine)	
	PENR161018	R161018	½ oz.	Phenol Red (pH)	
	PENR161150	R161150	½ oz.	OTO & Phenol Red, Carded Set	
	PENR161046	R161046	8 oz.	OTO (Chlorine / Bromine)	
	PENR161116	R161116	8 oz.	Phenol Red (pH)	
	PENR161596	R161596	8 oz.	Cyanuric reagent	
	PENR161025	R161025	1 oz.	Solution #1	OTO (Chlorine / Bromine)
	PENR161178	R161178	1 oz.	Solution #2	Phenol Red (pH)
	PENR161185	R161185	1 oz.	Solution #3	Acid Demand & Total Alkalinity
	PENR161204	R161204	½ oz.	Solution #4	Chlorine Neutralizer
	PENR161203	R161203	½ oz.	Solution #5	Total Alkalinity
	PENR161634	R161634	½ oz.	Solution #6	Water Hardness
	PENR161644	R161644	1 oz.	Solution #7	Water Hardness

All items cataloged are normally stocked unless noted.
Not Stocked ✻ While Supplies Last

QUALITY POOL SUPPLY

Code	New Product Number	Old Product Number	Description
			Test Kits
	TAYK2005	K2005	**2000 Series Complete Test Kit - ¾ oz. Reagents** Chlorine & Bromine Alkalinity, DPD CYA, Hardness, pH
	TAYK2005C	K2005C	**2000 Series Service Complete Test Kit - 2 oz. Reagents** Chlorine & Bromine Alkalinity, DPD CYA, Hardness, pH
	TAYK2006	K2006	**2000 Series Complete Test Kit** Chlorine & Bromine Alkalinity, FAS-DPD CYA, Hardness, pH
	TAYK1764	K1764	**Drop Test, Total Dissolved Solids (TDS)** Acid-Base Titration
			Accessories
	TAY2004B	2004B	Pool & Spa Water Chemistry Guide
	TAY4024	4024	Calibrated Test Cell, 11.5 ml
	TAY9056	9056	2000 Series Comparator Block

All items cataloged are normally stocked unless noted.

Not Stocked ✻ While Supplies Last

Test Kit Replacement Reagents

Code	New Product Number	Old Product Number	Description	
	TAYR0001A	R0001A	¾ oz.	DPD Reagent #1
	TAYR0001C	R0001C	2 oz.	DPD Reagent #1
	TAYR0002A	R0002A	¾ oz.	DPD Reagent #2
	TAYR0002C	R0002C	2 oz.	DPD Reagent #2
	TAYR0003A	R0003A	¾ oz.	DPD Reagent #3
	TAYR0003C12	R0003C	2 oz.	DPD Reagent #3
	TAYR0004A	R0004A	¾ oz.	pH Indicator Solution
	TAYR0004C	R0004C	2 oz.	pH Indicator Solution
	TAYR0005A	R0005A	¾ oz.	ADR Reagent
	TAYR0005C12	R0005C	2 oz.	ADR Reagent
	TAYR0006A24	R0006A	¾ oz.	BDR Reagent
	TAYR0006C12	R0006C	2 oz.	BDR Reagent
	TAYR0007A	R0007A	¾ oz.	Thiosulfate N/10
	TAYR0007C	R0007C	2 oz.	Thiosulfate N/10
	TAYR0008A	R0008A	¾ oz.	Total Alkalinity Indicator
	TAYR0008C	R0008C	2 oz.	Total Alkalinity Indicator
	TAYR0009A	R0009A	¾ oz.	Sulfuric Acid 12n
	TAYR0009C12	R0009C	2 oz.	Sulfuric Acid 12n
	TAYR0010A	R0010A	¾ oz.	Calcium Buffer
	TAYR0010C12	R0010C	2 oz.	Calcium Buffer
	TAYR0011LA24	R0011LA	¾ oz.	Calcium Indicator
	TAYR0011LC12	R0011LC	2 oz.	Calcium Indicator
	TAYR0012A	R0012A	¾ oz.	Hardness Reagent
	TAYR0012C12	R0012C	2 oz.	Hardness Reagent
	TAYR0013A24	R0013A	¾ oz.	Cyanuric Acid
	TAYR0013C	R0013C	2 oz.	Cyanuric Acid
	TAYR0013E	R0013E	16 oz.	Cyanuric Acid Reagent
	TAYR1003JC12	R1003JC	2 oz.	pH Indicator (Phenol Red)
	TAYR0870I12	R08701	10 grams	DPD Powder
	TAYR0871A24	R0871A	¾ oz.	FAS-DPD Titrating Reagent (Chlorine)
	TAYR0871C12	R0871C	2 oz.	FAS-DPD Titrating Reagent (Chlorine)

All items cataloged are normally stocked unless noted.
Not Stocked ✻ While Supplies Last

QUALITY POOL SUPPLY

Code	New Product Number	Old Product Number	Description
RELIANT®			**Leaf Skimmers And Rakes**
	BCIB7612	QBD0226	Reliant Standard Skimmer Net
	BCIB7615	QBD0230	Reliant Heavy Duty Leaf Rake
	BCIB7613	QBD0287	Reliant Aluminum Framed Leaf Skimmer
	BCIB7671	QBD0544	Reliant Leaf Skimmer w/60" Pole
RELIANT®			**Telescopic Poles**
	BCIB8631	BD0620	Reliant Vacuum Pole 5-15'
	BCIB8627	BD0695	Reliant Vacuum Pole 8-16'
	BCIB8628	BD0696	Reliant Vacuum Pole 6-12'

All items cataloged are normally stocked unless noted.

Not Stocked ✻ While Supplies Last

Code	New Product Number	Old Product Number	Description
RELIANT®		**Vacuum Heads**	
	BCIB7706	QBD0423	Reliant Economy Vacuum Head
	BCIB7708	QBD0448	Reliant Triangular Vacuum Head in Clamshell
	BCIB7710	QBD0451	Reliant Flexible Vacuum Head
	BCIB7709	QBD0452	Reliant Clear Triangular Vacuum Head in Clamshell
	BCIB7713	QBD0455	Reliant 14" Heavy Duty Flexible Vacuum Head
	BCIB7728	BD0457	Leaf Eater With Wheels and Brushes Works with Rainbow R211426 replacement bags (see page 316)
RELIANT®		**Brushes**	
	BCIB7570	BD0130	Aluminum Back 36" Brush
	BCIB7531	QBD0125	Reliant 18" Curved Brush
	BCIB7534	QBD0127	Reliant 18" Curved Brush with Backer and Mixed Bristles Not for use on vinyl or fiberglass surfaces
	BCIB7512	QBD0134	Reliant 10" Straight Algae Brush with Stainless Steel Bristles Not for use on vinyl or fiberglass surfaces

All items cataloged are normally stocked unless noted.
Not Stocked ✻ While Supplies Last

QUALITY POOL SUPPLY

Code	New Product Number	Old Product Number	Description
			Vacuum Heads
	PENR201350	R201350	**Vinyl Liner Vacuum** 1¼ or 1½, Clamshell Approx. 3 lbs.
✻	PENR201108	R201108	**Economy Crescent Shaped** Includes Lead Weights - 1¼ lbs. Not Clamshell Packaged
	PENR201392	R201392	**Vinyl Liner Vacuum** 1¼ or 1½, Clamshell, 3 lbs.
	PENR201398	R201398	**Clear View** 1½" or 1¼" swivel connection Clamshell, 4 lbs.
	PENR201388	R201388	**14" Superflex** Spring tension handle Approx. 3½ lbs. 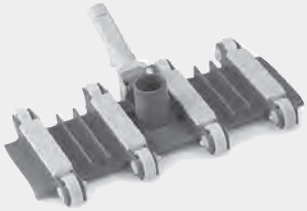
	PENR201126	R201126	**19" Lifegard Commercial** Swivel wheels, lead weights, 1½" swivel or 2", Approx. 9 lbs.
	PENR201276	R201276	**14" ProVac Series #214** Metal Swivel handle, ball bearing wheels, Stainless Steel nuts and bolts. 7.33 lbs.

All items cataloged are normally stocked unless noted.

Not Stocked ✻ While Supplies Last

Code	New Product Number	Old Product Number	Description
			Vacuum Poles R500070
	PENR500070	R500070	**8-16' Blue Telescopic Pole - With Outside Cam & Vinyl Grip** Constructed of high quality drawn aluminum tubing. Each packed in a protective poly sleeve. (12 / case)
	PENR500072	R500072	**6-12' Blue Telescopic Pole with Vinyl Grip**
	PENR191092	R191092	**8-16' Yellow Commercial Fiberglass Pole** E-Z Lock compression locks are manufactured to withstand abuse. Required for service pros in areas where protection from electrical shock is mandatory. UV protective coating helps prevent splintering with age.
	PENR191090	R191090	**12-24' Blue Commercial Aluminum Pole** Features an outside cam and vinyl grip.
	PENR191106	R191106	**12' One-piece straight pole with vinyl grip**
			Pole Accessories and Parts
	PENR221136	R221136	**Pole Adapter with 2 Brass Bolts & Wing Nuts (Carded)** Converts pole to fit tools that require a bolted mount, including vac hoses. Includes two brass bolts and nuts.
	PENR22001	R22001	Replacement Delrin spring clip (each)
	PENR221166	R221166	Brass bolt & wing nut (Set of 6) Required for blue safety hook attachment
	PENR191296	R191296	E-Z Lock Cam for 1 1/4" & 1 1/8" O.D. Poles Complete with glue and instructions. (carded)
	PENR191256	R191256	Metal Cam (carded)
	PENR22006	R22006	Pole Cap for 1 1/8" Poles

All items cataloged are normally stocked unless noted.
Not Stocked ✻ While Supplies Last

Code	New Product Number	Old Product Number	Description
			Leaf Skimmers
	PENR121196	R121196	Aluminum Heavy Duty Skimmer
	PENR121216	R121216	Replacement Screen for R121196 Heavy Duty Skimmer
	PENR121026	R121026	Plastic Economy Skimmer
	PENR121106	R121106	Aluminum Heavy Duty
	PENR121186	R121186	Long Handle Skimmer with 1" x 4' Pole
			Leaf Eater
	PENR211036	R211036	Leaf Eater with swivel wheels Works from a garden hose or pool cleaner hose. Each packed in a display box. See page 316 for replacement bags.
			Pool Brushes
	PENR111046	R111046	Aluminum Heavy Duty 18" Curved Brush
	PENR111366	R111366	Plastic Economy 18" Curved Brush
	MTL3619300	193MX	Acid Wash Brush (wood)
	MTL4026100	20003-T	4½' Wood Handle for above
	PENR500012	R500012	6" Algae Brush w/Stainless Steel Bristles Not for use on vinyl or fiberglass surfaces
	PENR111556	R111556	Rainbow multipurpose scrubber, 3 interchangeable pads

All items cataloged are normally stocked unless noted.

Not Stocked ✻ While Supplies Last

Code	New Product Number	Old Product Number	Description
PENTAIR RAINBOW		**Leaf Trap**	
	PENR211084	R211084	Leaf Trap with clear lid. Use with automatic pool cleaners or conventional vacuum heads. Traps debris in polyester bag.
PENTAIR RAINBOW		**Pool Hooks**	
	PENR221046	R221046	Pair of Vacuum Hose Hooks (carded) Screws Included
	PENR221036	R221036	Pair of Pole Hangers (carded) Screws Included
PENTAIR RAINBOW		**Leak Detector**	
	PENR220006	R220006	Leak Detector Kit
	PENR220008	R220008	Replacement Solution, ¾ oz.
PENTAIR RAINBOW		**Maintenance Kits**	
	PENR131048	R131048	For Inground Pools (no test kit) • Triangle Vac w/Snap adaptors • Thermometer • Leaf Skimmer • Brush w/snap adaptors
	PENR131076	R131076	For Above Ground Pools (with test kit) • Vacuum Head • Thermometer • Leaf Skimmer • Brush • Test Kit

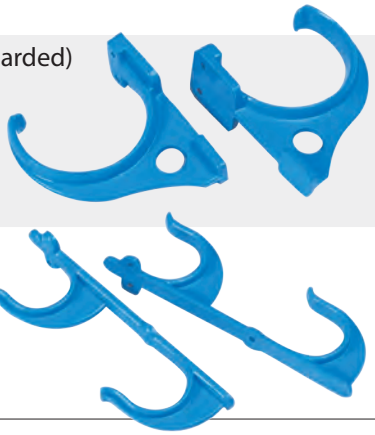

All items cataloged are normally stocked unless noted.
Not Stocked ✻ While Supplies Last

Code	New Product Number	Old Product Number	Description
			Leaf Skimmers
	OBP120030	OB120030	Leaf Skimmer with Replaceable Net
	OBP120031	OB120031B	Replacement Net for Leaf Skimmer (OB120030)
			Brushes
	OBP130040	OB130040	**20" Vac Brush** (Attaches to Vacuum Hose)
	OBP110030	OB110030	**20" Flexible Brush**

All items cataloged are normally stocked unless noted.
Not Stocked ✻ While Supplies Last

Code	New Product Number	Old Product Number	Description
			Leaf Rakes and Skimmers
	OBP140090	OB140090	Tsunami 18" Leaf Skimmer with Standard Mesh
	OBP140060	OB140060	Tsunami 20" Leaf Rake with Standard Mesh Bag
	OBP140064	OB140064	Tsunami 20" Leaf Rake with Fine Mesh Bag
	OBP140080	OB140080	Typhoon 24" Leaf Rake with Soft Mesh Bag
			Brushes
	OBP140071	OB140071	Tsunami 22" Nylon Bristle Brush
			Poles
	OBP100073	OB100073	8'-16' Pro Service Dual Cam Pole with EZ Release system
	OBP100074	OB100074	8'-16' Pro Service Dual Cam Pole

All items cataloged are normally stocked unless noted.
Not Stocked ✻ While Supplies Last

Code	New Product Number	Old Product Number	Description
RedLeopard PERFORMANCE BY DESIGN			**Manual Vacuum Cleaner**
✻	NCH60104RLP	60104	**Manual Vacuum Cleaner - Gunite - 4 / case** • Duo-disc suction profile for best debris pick-up • Hinge design cleans steps and tight corners • Swivel reduces hose coiling • Twin pivot design easy-to-steer
SKIMLITE			**Super Duty Series Poles** SL5008 SL5009
	SKI5008	SL5008	8' to 16' with external locking mechanism
	SKI5009	SL5009	8' to 16' with internal locking mechanism
SL9018			**Super Duty Dually™ Series Poles** The Dually™ locking system allows both internal and external locking for high demand jobs. You also have the option to use only one lock for quicker, lighter jobs.
	SKI9016	SL9016	8' to 16' Two Piece
	SKI9018	SL9018	6' to 18' Three Piece
			Eliptilock Poles
	SKI1006	SL1006	6' to 12'
	SKI1008	SL1008	8' to 15'
			Heavy Duty Snap Lite Pole
	SKI6016	SL6016	8' to 16' Two Piece
HAYWARD			**Vacuum Heads**
	HPPSP1067	SP1067	Vinyl / Fiberglass Vacuum - 12" Circular - Half Moon
	HPPSP1068	SP1068	Vinyl / Fiberglass Vacuum - Triangular SP1068
	HPPSP1068DL	SP1068DL	SP1068 Vac Head Plus 3 (Weighted)

All items cataloged are normally stocked unless noted.
Not Stocked ✻ While Supplies Last

NOTES

QUALITY POOL SUPPLY

Code	New Product Number	Old Product Number	Description
RELIANT®		**Thermometers**	
	BCIB7835	QBD0336	Duck
	BCIB7836	QBD0337	Little Whale
	BCIB7837	QBD0338	Turtles
	BCIB7853	QBD0339	Goldfish
	BCIB7840	QBD0342	Polar Bear
	BCIB7848	QBD0381	Plain

All items cataloged are normally stocked unless noted.

Not Stocked ✻ While Supplies Last

Code	New Product Number	Old Product Number	Description
			Ocean Blue Water Products — **Thermometers**
	OBP150056	OB150056	Floating Polar Bear Thermometers
			Case of 12 (2 styles mixed)
			Pentair Rainbow — **Thermometers**
	PENR141036	R141036	**White/Plastic** 3' cord (carded)
	PENR141076	R141076	**Chrome/Brass** 3' cord (carded)
	PENR141200	R141200	**EZ Read Combo (Sink or Float)** Features magnifying lens and includes snap on/off flotation top and 36" rope leash with anchor plate. Clamshell packaging.

All items cataloged are normally stocked unless noted.
Not Stocked ✻ While Supplies Last

Code	New Product Number	Old Product Number	Description
		1 1/4" Forge-Loop 3 Year Warranty - Blue & Black Hose (No swivel cuff)	
	HAVBO52811418HFC	65428	1 1/4" x 18'
	HAVBO52811421HFC	67005	1 1/4" x 21'
	HAVBO52811424HFC	65430	1 1/4" x 24'
	HAVBO52811427HFC	67004	1 1/4" x 27'
	HAVBO52811430HFC	65432	1 1/4" x 30'
	HAVBO52811436HFC	65433	1 1/4" x 36'
	HAVBO52811442HFC	65434	1 1/4" x 42'
		Bulk Blow Molded Hose	
	HAVEC100114252HF	772924	1 1/4" x 252' (Cuffed every 3' for cutting)
		1 1/2" Forge-Loop 1 Year Warranty - Blue & Black Hose with Swivel Cuff	
	HAVBO52811225HFS	68871	1 1/2" x 25'
	HAVBO52811230HFS	68870	1 1/2" x 30'
	HAVBO52811235HFS	68869	1 1/2" x 35'
	HAVBO52811240HFS	68868	1 1/2" x 40'
	HAVBO52811245HFS	68867	1 1/2" x 45'
	HAVBO52811250HFS	68866	1 1/2" x 50'
		Bulk Blow Molded Hose	
	HAVEC100112150HF	772925	1 1/2" x 150' (Cuffed every 3' for cutting)
		Premium Vac Hose - White i-Helix Service Hose with Swivel Cuff	
	HAVIH217112030SI	66085	1 1/2" x 30'
	HAVIH217112035SI	66208	1 1/2" x 35'
	HAVIH217112040SI	66209	1 1/2" x 40'
	HAVIH217112050SI	66210	1 1/2" x 50'

Vacuum Hose

All items cataloged are normally stocked unless noted.

Not Stocked ✻ While Supplies Last

Code	New Product Number	Old Product Number	Description
Haviflex		**Replacement Cuffs & Couplings** For Plastiflex, Haviland, or other spiral-wound vac hoses (Not for molded hoses)	
	HAVCUPA00096	241	1¹/₄" Cuffs - White
	HAVCUPA00129	211	1¹/₂" Cuffs - White
	HAVPA000971EA	242	1¹/₄" Double Threaded Coupling - Gray
	HAVCUPA00126	212	1¹/₂" Double Threaded Coupling - Gray
		Vacuum Hose Fittings	
	PFASPA1512	1512	1¹/₂" MIP x 1¹/₂" or 1¹/₄" Hose
	HPPSPX1091Z4	SPX1091Z4	1¹/₂" MIP x 1¹/₂" Hose
	HPPSPX1091Z7PAK2	SPX1091Z7	Hose Adapter 1-1/2" MIP x 1-1/2"/1-1/4"
	HPPSPX1105Z2	SPX1105Z2	1¹/₂" MIP x 1¹/₄" Hose Ell
	HPPSP1091CV	SP1091CV	In-Line Combo 1½" x 1¼" Hose Adapter and Check Valve *(Hayward)*
FeherGuard		**Feherguard Vac Hose Reel**	
	FEHFGVHGN	FG-VHG	Vac hose reel, molded from U.V. stabilized high density polyethylene.

All items cataloged are normally stocked unless noted.
Not Stocked ✻ While Supplies Last

Code	New Product Number	Old Product Number	Description
		Vacuum Parts	
	PENR201496	R201496	Rainbow bolt & nut for handle
	PENR201476	R201476	Rainbow "Snap-Adapt" type handle
	PENR201526	R201526	Brush set for R201350 (carded)
	PENR201536	R201536	Brush set for R201392 (carded)
	PENR201540	R201540	Brush set for R201398 (carded)
	PENR03086	R03086	Handle Connecting Pin 1¾" for R201350
	PENR03101	R03101	Handle Connecting Pin, 2¼" for Multiple Vacuums & Leaf Eater
	PENR201498	R201498	Rainbow Axle Assembly with Wheel for R201388 (Set of 4)
	PENR201500	R201500	Rainbow Axle Assembly with Wheel for R201126 (Set of 4)
	HPPSPX1067C	SPX1067C	Brush set for SP1067
	HPPSPX1068G3	SPX1068G3	Brush set for SP1068 (Set of 3)
	HPPSPX1067QA	SPX1067QA	Quick Snap Handle with Spring For SP1067
	HPPSPX0068Z1A	SPX0068Z1A	Bracket Bolt/Nut For SP1067
	PENR201456	R201456	Flex-A-Vac Axle Assembly (Wheel not Included)
	PENR03021	R03021	Flex-A-Vac Wheel Only
❋	PEN91000500	91000500	Flex-A-Vac Handle (Chrome Snap-Adapt)
	PENR211426	R211426	Rainbow Leaf Eater Bag
	PENR211436	R211436	Rainbow Leaf Eater Wheel & Caster (Pack Of 3)

All items cataloged are normally stocked unless noted.

Not Stocked ❋ While Supplies Last

PRODUCTS

Hayward 335
Maytronics 334
Pentair 338
Polaris 333
WaterTech 337
Zodiac 333

PARTS

Aquabot 341
Booster Pumps 346
Dolphin Maytronics 340
Polaris 342
Replacement Hoses 340
TigerShark 356

PLEASE VISIT OUR PARTS WEBSITE:

http://www.qualitypool.com/parts/

Parts explosions for:

Letro LEGEND
Letro LEGEND II
Baracuda Alpha 3
Baracuda Alpha 2
Baracuda G3
Baracuda Ranger
Baracuda Beta
Arneson Pool Sweep

CLEANER WARRANTY NOTICE:
Most manufacturers are no longer allowing over-the-counter exchanges for warranty claims on cleaners. (Exception - Apollo)
Please contact the respective manufacturer's representative for instructions.

QUALITY POOL SUPPLY

Polaris® TRADE SERIES EXCLUSIVE

Pressure Pool Cleaners

BRICK AND MORTAR NO INTERNET SALES

Code	New Product Number	Old Product Number	Description
	PLSWE000003 and PLSPB4SQ	WE000003 and PB4SQ	**TR35P Cleaner and PB4SQ Booster Pump** *Trade Series Exclusive*
	PLSWE000003	WE000003	**TR35P Pressure Side Cleaner** *Trade Series Exclusive* • Requires Booster Pump • Triple Venturi Jet • Large Capacity Zippered Bag. • 31 ft. Sweep Hose
	PLSPB4SQ	PB4SQ	**Booster Pump** *Trade Series Exclusive* • Energy-efficient, multistage booster pump • Operates quietly • Easy to install and service TRADE SERIES EXCLUSIVE
CALL	PLSF1TR	F1TR	**TR36P Pressure Side Cleaner** *Trade Series Exclusive* • Does not require Booster Pump • Triple Jet Venturi • Large Throat for Debris • Large Filter Bag Capacity
	PLSF4TR	F4TR	**Polaris Quattro Sport Cleaner** • Requires Booster Pump • Pressure - Side Cleaner
	PLSF5TR	F5TR	**Polaris TR28P Pressure Cleaner** *Trade Series Exclusive* • Requires Booster Pump • Powered by dual venturi jets it cleans in just a few hours • Large throat for big debris • TailSweep PRO eliminates spraying outside the pool • Large capacity all purpose premium zippered debris bag

All items cataloged are normally stocked unless noted.
Not Stocked ✻ While Supplies Last

Polaris®

TRADE SERIES
EXCLUSIVE

OUR MOST
ADVANCED CLEANERS
JUST FOR YOU

Whether it's keeping pool floors clean or keeping the water clear, new in 2022, you can now rely on the power and performance of Polaris to keep your in-ground or above-ground pool clean.

ROBOTIC
State-of-the-art, app-controlled robotic cleaners

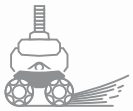

SUCTION
Innovative, highly efficient suction cleaners

PRESSURE
Over 45 years of leadership in pressure cleaning

PolarisPool.com

Introducing Above-Ground Systems

©2022 Zodiac Pool Systems LLC. Polaris® and the Polaris 3-wheeled cleaner design are registered trademarks of Zodiac Pool Systems LLC. All other trademarks referenced herein are the property of their respective owners. 3956.4_AD

iAquaLink®

ABSOLUTE **CONTROL.**
ABSOLUTE **CONVENIENCE.**

Give your customers a better pool experience.

With iAquaLink, they'll never need to turn another pool valve, switch on a light, or power up the pump from the pool pad. ***It's all just a tap away.***

FILTRATION | HEATING | SANITIZATION | ROBOTIC POOL CLEANERS | POOL AND SPA LIGHTING | FIRE FEATURES | WATER FEATURES | LANDSCAPE LIGHTING

Highest rated pool control app in the industry

Download on the App Store | GET IT ON Google Play

iAquaLink.com

©2022 Zodiac Pool Systems LLC. All rights reserved. ZODIAC® is a registered trademark of Zodiac International, S.A.S.U., used under license. All other trademarks are the property of their respective owners. 6792.4_AD

CLEANER WARRANTY NOTICE:
Most manufacturers are no longer allowing over-the-counter exchanges for warranty claims on cleaners. (Exception - Apollo)
Please contact the respective manufacturer's representative for instructions.

Code	New Product Number	Old Product Number	Description
Polaris TRADE SERIES EXCLUSIVE		**Robotic Cleaners**	
	PLSFALPHAIQP	FALPHAIQP	**Polaris Alpha iQ+ Robotic Cleaner** SMART Cycle Cleaning Mode, Deliberate Navigation, Temperature Display, Large Illuminated Debris Canister, and Multiple Cleaning Modes
	PLSFALPHAIQ	FALPHAIQ	**Polaris Alpha iQ Robotic Cleaner** SMART Cycle Cleaning Mode, Deliberate Navigation, Extra Large Filter Canister
	ZODIAC TRADE SERIES EXCLUSIVE	**Suction Cleaners**	
CALL	ZODMX8EL	MX8EL	**Zodiac MX8 Elite Suction Side Cleaner.** Dual Cyclonic Scrubbing, 39' Twist Lock Hose. 1 Year Warranty Trade Series Exclusive
CALL	ZODWS000016	WS000016	**Zodiac TR2D Suction Side Disc Cleaner.** Dura Life Diaphragm, Twist Locking Hose Trade Series Exclusive
Polaris		**Ladder Guard**	
	PLSG21	G21	2 Panels - Works with All Units

All items cataloged are normally stocked unless noted.
Not Stocked ✻ While Supplies Last

CLEANER WARRANTY NOTICE:
Most manufacturers are no longer allowing over-the-counter exchanges for warranty claims on cleaners. (Exception - Apollo)
Please contact the respective manufacturer's representative for instructions.

QUALITY POOL SUPPLY

maytronics Exceptional Pool Experience

Robotic Pool Cleaners

BRICK AND MORTAR NO INTERNET SALES

Code	New Product Number	Old Product Number	Description
	MAY99996151USF	96151	**Active 10 Above Ground Robotic Cleaner** • Floor only • Top load basket - fine • Single brush • 40' Cord
	MAY99996148USF	96154	**Active 15 Inground Robotic Cleaner** • Floor and wall • Basic power supply • Top load basket - fine • Single brush • Includes spring and fine cartridges • 49' Cord
	MAY99996203USW	96203	**Active 20 Inground Robotic Cleaner** • Floor, wall, and waterline • Basic power supply • Extra large top load basket • Two brushes, one active • Includes spring and fine cartridges • 60' Cord
	MAY99996231USWI	96231	**Active 30 Inground Robotic Cleaner** • Floor, wall, and waterline • Advanced power supply • Extra large top load basket • Two brushes, one active • Includes spring cleanup cartridge and fine cartridge • Basic smartphone app; Bluetooth with WiFi • 60' Cord
	MAY99996235USWI	96235	**Active 30i Inground Robotic Cleaner** • Floor, wall, and waterline • Advanced power supply • Extra large top load multi-layer basket • Two brushes • Includes spring cleanup cartridge and fine cartridge • Full smartphone app; Bluetooth with WiFi • 60' Cord • Includes Caddy
	MAY99996271US	96271	Active 40 Remote Cleaner w/ Wi-Fi • Floor, wall and waterline • Full WiFi connectivity • 60' Cord • Includes Caddy
	MAY99996614US	96614	Active 60 Remote Cleaner w/ Wi-Fi • Floor, wall and waterline • Full WiFi connectivity • 60' Cord • Includes Caddy

Active 10

Active 15

Active 20, 30, 30i

Active 40

All items cataloged are normally stocked unless noted.
Not Stocked ✻ While Supplies Last

CLEANER WARRANTY NOTICE:
Most manufacturers are no longer allowing over-the-counter exchanges for warranty claims on cleaners. (Exception - Apollo)
Please contact the respective manufacturer's representative for instructions.

Code	New Product Number	Old Product Number	Description
HAYWARD		**Automatic Pool Cleaners**	
	HPPRCH651CUY	RCH651CUY	**AquaVac 650** Robotic Cleaner with Caddy (Stocked in Perrysburg only)
	HPPRC9950CUB	RC9950CUB	**TigerShark** 3 hour average clean time - 55' cord
	HPPRC9990CUB	RC9990CUB	**TigerShark QC** (Quick Clean Technology) 1 hour average clean time - 55' cord
	HPPRC99385	RC99385	**TigerShark Caddy**
CALL	HPPRC9742CUBY	RC9742CUBY	**Shark Vac with Caddy Cart** 110V, 50' cord Floor-specific cleaner Two-Hour Cleaning Cycle Stocked in Perrysburg only
HAYWARD AquaBug		**1 Year Limited Warranty** For Above Ground Pools or Flat Bottom Ingrounds	
	HPP500	HAY500	AquaBug
	HPP100	HAY100	Penguin (Three colors customization kit included)

All items cataloged are normally stocked unless noted.
Not Stocked ✻ While Supplies Last

CLEANER WARRANTY NOTICE:
Most manufacturers are no longer allowing over-the-counter exchanges for warranty claims on cleaners. (Exception - Apollo)
Please contact the respective manufacturer's representative for instructions.

QUALITY POOL SUPPLY

Code	New Product Number	Old Product Number	Description
			Clearance Cleaners
✻	AQPARAPID4WD	ARAPID4WD	**Rapids 4WD Cleaner** 60' cord, 3 hour cleaning time, Floor & Wall Cleaning with top-loading filter basket.
✻	PLS613000	6-130-00	**Polaris 65** • For above ground pools up to 5 feet deep • Operates with pumps and filtration systems normally found on above ground pools • Vacuums the bottom and sweeps the sides in 3 hours or less • Quick and easy installation
✻	ZODF9650iQ	F9650IQ	**Polaris 9650IQ Sport Robotic Cleaner** • Connects via wi-fi on Android and iOS devices • Dirty Canister Indicator • App features remote control recurring cleaning cycles, and easy lift system. • 70' Cable

All items cataloged are normally stocked unless noted.
Not Stocked ✻ While Supplies Last

CLEANER WARRANTY NOTICE:
Most manufacturers are no longer allowing over-the-counter exchanges for warranty claims on cleaners. (Exception - Apollo)
Please contact the respective manufacturer's representative for instructions.

Code	New Product Number	Old Product Number	Description
WATER TECH "The pool invention people"		**Benefits of the Volt Series** • Levels the playing field for dealers by establishing minimum advertised prices across the product line • Better product specifications versus Pool Blaster lineup	
	WTC13000BB	VLTFX-2	**Volt FX-2 Cleaner** - 3x the debris capturing capacity, 2x the power, and over 30% larger vacuum head compared to the Aqua Broom
	WTC24050GL	VLTFX-4	**Volt FX-4 Cleaner** - over 2x the debris capacity of the Catfish cleaner
	WTC34000KL	VLTFX-8	**Volt FX-8 Cleaner** - more power, an extended debris chamber, and a larger filter bag than the Max cleaner
WATER TECH "The pool invention people"		**Filter Bags**	
	WTCP32X022AP	P32X022AP	All purpose filter bags for Volt 8Li
	WTCP30X022AP	P30X022AP	All purpose filter bags for Volt 4Li
	WTCP12X022AP	P12X022AP	All purpose filter bags for Volt 2Li

For replacement parts see page 341

All items cataloged are normally stocked unless noted.
Not Stocked ✻ While Supplies Last

CLEANER WARRANTY NOTICE:
Most manufacturers are no longer allowing over-the-counter exchanges for warranty claims on cleaners. (Exception - Apollo)
Please contact the respective manufacturer's representative for instructions.

QUALITY POOL SUPPLY

Code	New Product Number	Old Product Number	Description
PENTAIR		**Kreepy Krauly®**	
	PENK60430	K60430	**Kreepy Kruiser** • Silent flapper design provides quiet operation. • Won't get stuck or thrown off course by main drains, tight corners, etc. • Built-in bumper allows free movement around steps and ladders. • Installs in minutes, without tools, to skimmer
	PENK50600	K50600	**E-Z Vac Above Ground** • Only one moving part for simple operation • No bags or compartments to empty, wheels or gears to jam, diaphragms to replace No costly booster pumps to buy or operate • Free automatic skimming valve assures proper cleaning speed and simultaneous skimming
CALL	PENLA01N	LA01N	**Booster Pump - Stocked in Waterford only** • Use with all pressure side cleaners • Hose and Adapters included
	PENLAMS05	LA-MS05	**Boost Rite Booster Pump** (replaces LA01N) • Five stage impeller design cuts electricity use by up to 27% • Includes hose kit and adapter
	PENLX5000G	LX5000G	**Kreepy Krawly Legend II** Pressure Side - Cleaner - NO Pump

All items cataloged are normally stocked unless noted.
Not Stocked ✻ While Supplies Last

CLEANER WARRANTY NOTICE:
Most manufacturers are no longer allowing over-the-counter exchanges for warranty claims on cleaners. (Exception - Apollo)
Please contact the respective manufacturer's representative for instructions.

Code	New Product Number	Old Product Number	Description
PENTAIR TRADEGRADE BY PENTAIR		**Kreepy Krauly®**	
	PEN360322	360322	**Kreepy Krauly® Prowler 920®** • All-surface deep cleaning with a powerful, high-speed scrubbing brush • Fast and easy debris removal with a top access filtration basket • Select from a large or fine debris filtration cartridges • Programmable daily cleaning schedules with a built-in weekly timer
	PEN360165	360165	Caddy Kit for Prowler 920/930 Cleaners
RELIANT®		**Diaphragm Cleaner**	
	BCIB7321	B7321	**Diaphragm Cleaner for Above Ground Pools** Includes 26' of hose, regulator valve, connector, weights, and skimmer adapter. Easy assembly and no tools required, ready to clean your pool in minutes, quiet operation. Automatic regulator valve adjusts the working speed of the cleaner from 8' - 12' per minute. For larger pools, additional hose sections (#772151) may be purchased separately. *Included Parts*

All items cataloged are normally stocked unless noted.
Not Stocked ✻ While Supplies Last

QUALITY POOL SUPPLY

Code	New Product Number	Old Product Number	Description
Haviflex		**Replacement Hoses** For Suction Style Cleaners	
	HAVMV200112004HF	772151	Interconnecting Section For Kreepy Krauly, Baracuda and other cleaners, 1.5" Hose (White)
Dolphin™		**Replacement Parts and Accessories**	
	MAY9991422R4	91422	Endeavor Ultra Fine Cartridge Replacement Kit 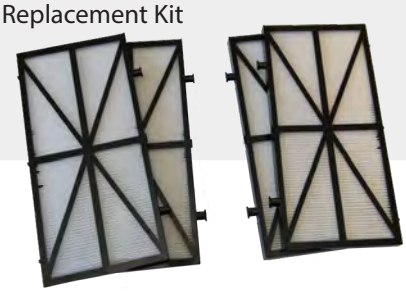
	MAY9991425R4	91425	Edge Ultra Fine Cartridge Replacement Kit
	MAY9995672USASSY	95672	Power Supply for Endeavor
	MAY9995678USASSY	95678	Power Supply for Dolphin edge
	MAY9995872DIY	Edge-cable	Edge Cable Assembly 3-Wire Remote Ready
	MAY9995861DIY	Endeavor-cable	Endeavor Cable Assembly (No Remote Capabilities)
	MAY9993179R1	93179	Replacement Remote - Apollo and Edge Cleaners

All items cataloged are normally stocked unless noted.

Not Stocked ✻ While Supplies Last

Aquabot Parts

Code	New Product Number	Old Product Number	Description
✻	APD2610	2610	Drive track roller bushing – white, plastic
✻	APD3200	3200	Drive Track (EA) - Black (ABS)
✻	APD3201	3201	Drive Track (EA) - Blue (ABS)
✻	HOS3302	3302	Drive Belt (PAIR) - Tan
✻	APD8000	8000	Clip, filter bag (PAIR)
✻	APD8100	8100	Filter Bag, Fine
✻	APD8200	8200	Filter Bag, Mesh
✻	APD11058	11058	Retaining Ring (E-Clip) for wheel tube

QUALITY POOL SUPPLY

Polaris

F9350, F9450, and F9550

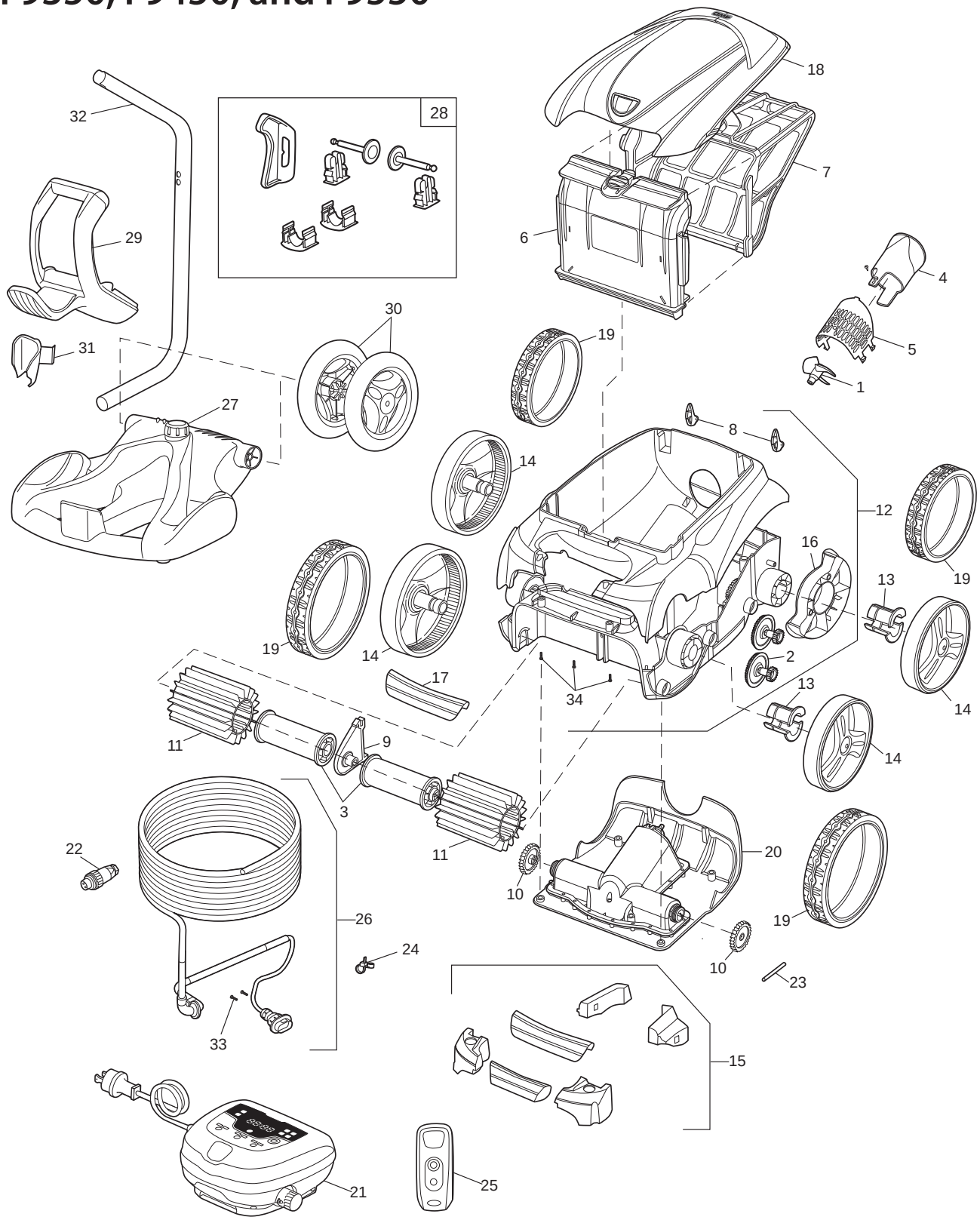

All items cataloged are normally stocked unless noted.

Not Stocked ✻ While Supplies Last

Code	New Product Number	Old Product Number	Key	Description
Polaris		F9350, F9450, and F9550		
	PLSR0517000	R0517000	1	Propeller
	PLSR0517200	R0517200	2	Transmission Kit
	PLSR0517400	R0517400	3	Brush Roller Kil, 2/ PK
	PLSR0517500	R0517500	4	Flow Outlet Kit
	PLSR0517600	R0517600	5	Motor Screen
	PLSR0517700	R0517700	6	Filter Canister Inlet Housing
✻	PLSR0517800	R0517800	7	Fine Filter Canister
	PLSR0535900	R0535900	7	General Purpose Canister
	PLSR0535800	R0535800	7	Ultra Fine Sand/Silt Canister
	PLSR0518100	R0518100	8	Roller Kit
	PLSR0518700	R0518700	9	Roller Support Kit
	PLSR0518800	R0518800	10	Drive Gear, 2/PK
	PLSR0528900	R0528900	11	Brush, 2 Pk
	JNDR0517300	R0517300	11	Brush, 2/ PK
	PLSR0539200	R0539200	12	Main Body Housing Kit
	PLSR0589100	R0589100	12	Main Housing (Top and Bottom)
	PLSR0518500	R0518500	13	Wheel Bushing Kit (1 Set for 1 Wheel)
	PLSR0539500	R0539500	14	Wheel, Black
✻	PLSR0529000	R0529000	14	Wheel, Silver
	PLSR0529100	R0529100	14	Rear Wheel, Small, Silver
	PLSR0539700	R0539700	15	Float Kit
	PLSR0540300	R0540300	16	Wheel Cover
	PLSR0540400	R0540400	17	Handle Grip
	PLSR0588500	R0588500	18	Hood Kit
	PLSR0543300	R0543300	18	Hood Kit, w/o Spoiler
	PLSR0539400	R0539400	18	Hood Kit
	PLSR0539600	R0539600	19	Tire Grey
	PLSR0529300	R0529300	19	Front Tire, Black
	PLSR0529400	R0529400	19	Rear Tire, Black
	PLSR0565600	R0565600	22	Floating Cable Plug Kit
	PLSR0567800	R0567800	23	Motor Block Shatt Pin, 5/PK
	PLSR0567900	R0567900	24	Floating Cable Clamp Kit, 5/PK
	PLSR0589000	R0589000	25	Remote Control
	PLSR0528700	R0528700	26	Floating Cable
	PLSR0516800	R0516800	26	Floating Cable
	PLSR0564800	R0564800	27	Caddy Base
	PLSR0564900	R0564900	28	Caddy Accessories Kit
	PLSR0565000	R0565000	29	Caddy Handle
	PLSR0565100	R0565100	30	Caddy Wheel Kit, 2/PK
	PLSR0548500	R0548500	31	Remote Control Holster
	PLSR0565200	R0565200	32	Caddy Tube Kit
	PLSR0608500	R0608500	33	Screw M4'16mm, 5/PK
	PLSR0516700	R0516700	34	Screw M4'12mm, 5/PK

QUALITY POOL SUPPLY

Polaris
3900 Sport

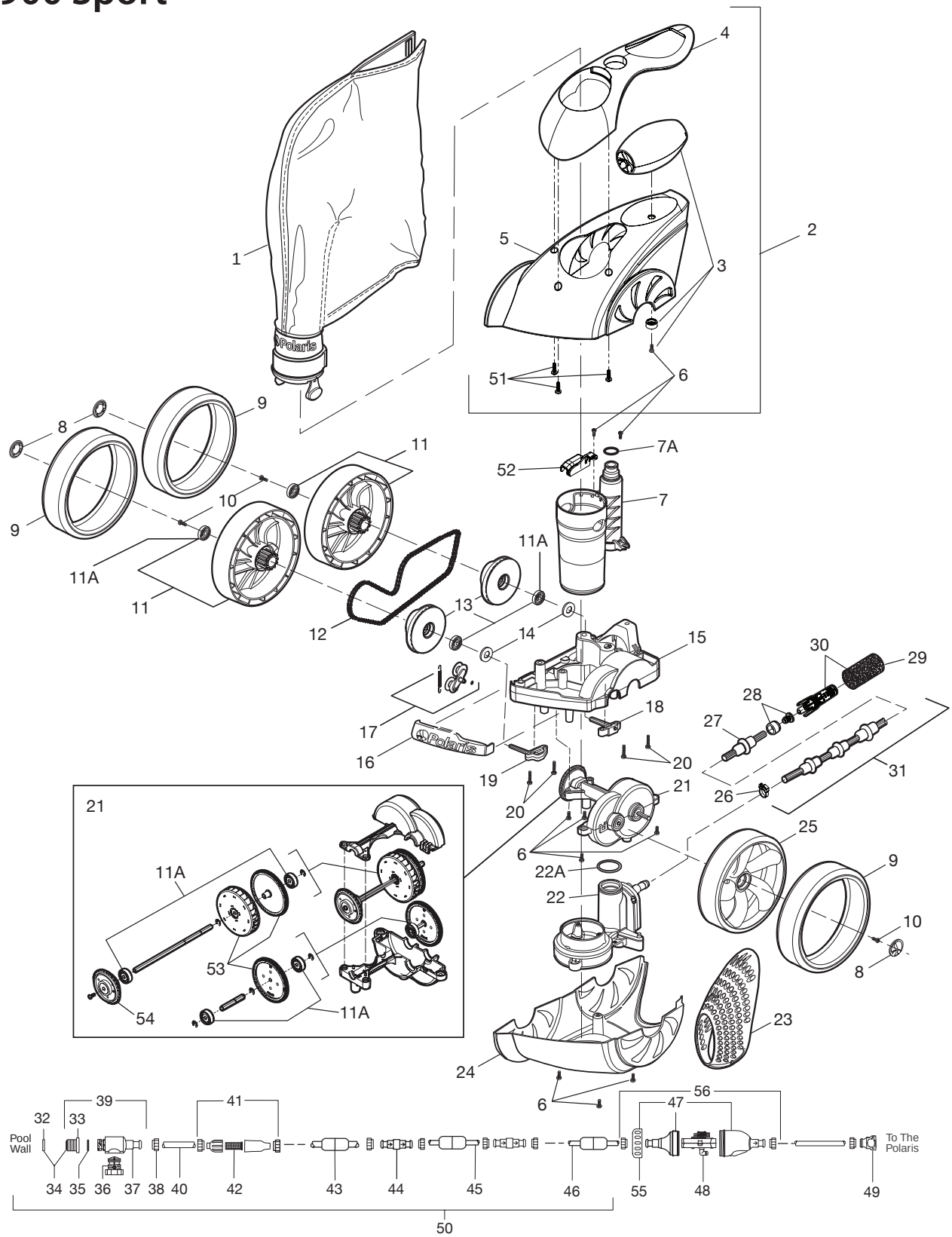

All items cataloged are normally stocked unless noted.

Not Stocked ✻ While Supplies Last

Code	New Product Number	Old Product Number	Key	Description
	PLS39310	39-310	1	3900 Sport Superbag
	PLS39003	39-003	2	Top Housing Assembly
	PLSR0537900	R0537900	4	Canopy
	PLSR0538100	R0538100	5	Housing Top
	PLSC40	C40	6	Screw 10-32 X 38" SS Pan Head 10Pk
	PLS48141	48-141	7a	O-Ring Feed Hose Connector
	PLS39008	39-008	8	Hubcap 3Pk
CALL	PLS48232	48-232	9	Tire Widetrax Black
❋	PLS39410	39-410	11	Double Side Wheel With Bearing
	PLS91001108	9-100-1108	11a	Ball Bearing
❋	PLS39126	39-126	12	Chain
	PLS39420	39-420	13	Wheel Sprocket Assembly With Bearing
❋	PLS39602	39-602	14	Wheel Spacer Pair 2Pk
	PLS39111	39-111	16	Bumper
	PLS39120	39-120	17	Chain Tensioner Kit
	PLS39430	39-430	18	Rear Axle Block Assembly
	PLS39440	39-440	19	Front Axle Block Assembly
	PLS48045	48-045	20	Screw 10-32 X 78" SS Pan Head With Star Washer
	PLS39200	39-200	21	Gearbox Assembly
	PLS39300	39-300	22	WMS Assembly With O-Ring
	PLSR0544000	R0544000	22a	O-Ring Sweeptail Jet
	PLS39005	39-005	23	Rear Housing
	PLS39004	39-004	24	Bottom Housing
	PLS39401	39-401	25	Single Side Wheel
	PLSB16	B16	26	Sweep Hose Attach Clamp Black
	PLS39021	39-021	27	Sweep Hose Wear Ring Blue 8Pk
	ZODB25	B25	28	Orifice Tip With Orifice Tip Guard
	PLS91003105	9-100-3105	29	Sweep Hose Scrubber
❋	PLSTSP10S	TSP10S	30	Tail Sweep Pro Strip Clip 12Pk
	PLS39500	39-500	31	Sweep Hose Complete
	PLS1011200	10-112-00	32	UWF Restrictor Disk Kit
	PLS1010800	10-108-00	34	UWF Restrictor Kit
	PLS650500	6-505-00	35	O-Ring UWF QD (All Pressure-Side Products)
	PLS91009006	9-100-9006	36	Pressure Relief Assembly Black
	PLSD30	D30	37	Quick Disconnect UWF Black
❋	PLSD16	D16	38	Nut Feed Hose Black
	PLSD44	D44	40	Barracuda R-Kit Adapter Hose 812" Large
	PLS48085	48-085	41	In-Line Filter Assembly Black
	PLS48222	48-222	42	Screen In-Line Filter
	PLSD47	D47	45	Feed Hose 10 Foot Black
	PLSD52	D52	46	Leader Hose 10 Foot Black
	PLSG62	G62	47	Back-Up Valve Black
	PLS48240	48-240	49	Feed Hose Connector Black
	PLSG6	G6	50	Feed Hose Complete With UWF No Back-Up Valve Black
	PLSR0538200	R0538200	51	Screw Self Tapping Canopy 3Pk
❋	PLSR0537800	R0537800	52	Chain Guard
	PLSR0547400	R0547400	53	Turbine Gear Assembly 3900
	PLSR0547500	R0547500	54	Drive Sprocket Assembly 3900
	PLSG67	G67	55	Collar Back-Up Valve Black
	PLSG64	G64	56	Case Kit For G62 Black

All items cataloged are normally stocked unless noted.
Not Stocked ❋ While Supplies Last

QUALITY POOL SUPPLY

Polaris

PB4-60 Booster Parts

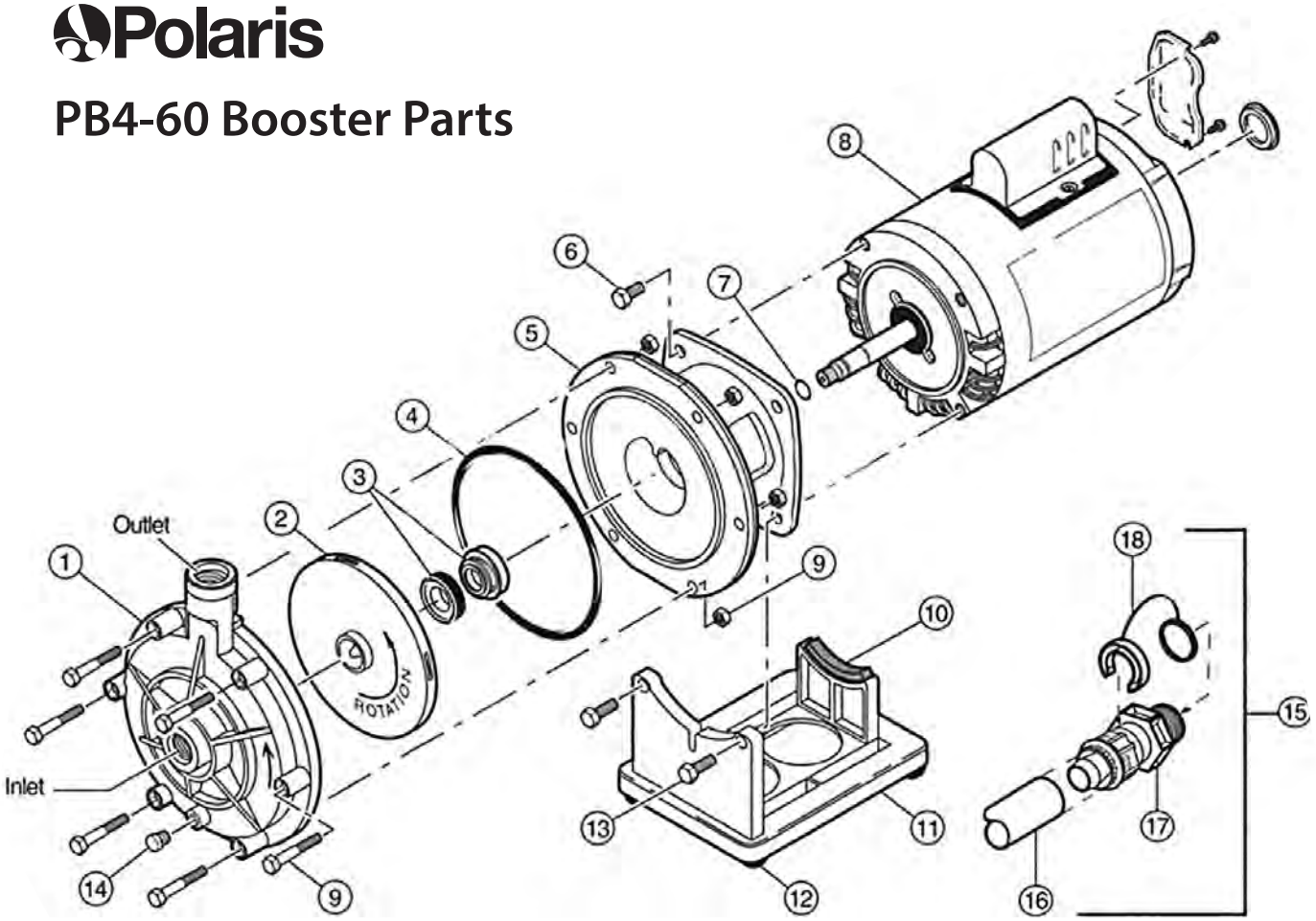

Code	New Product Number	Old Product Number	Key	Description
	PLSP15	P15	2	Impeller
	AQPAPCAS1000	AS-1000	3	Shaft Seal
	AEQO299	O-299	4	Bracket O-Ring
	AEQO39	O-39	7	Shaft O-Ring
✻	ZODP45	P45		Impeller Shaft
✻	ZODP50	P50		Set Screw
	CRMB625	B625	8	Motor 3/4 HP Threaded Shaft (See pump section page for pricing)
	BCIF412T10	P70	11	Pump Stand with Feet
	PLSP20	P20	14	1/8" NPTM Plastic Plug
	PLSP19	P19	16	Pump Hose 6' Flexible Reinforced
	JNDR0536700	R0536700		Jandy Pro Series Backplate, R-Kit 60Hz, PB4-60
	JNDR0537000	R0537000		Jandy Pro Series Plug, Drain, R-Kit, PB4-60
	PLSR0617100	R0617100		Polaris Installation Kit, Pump Hose & Soft Tube Quick Connects

All items cataloged are normally stocked unless noted.

Not Stocked ✻ While Supplies Last

Polaris

PB4-60Q Booster Parts

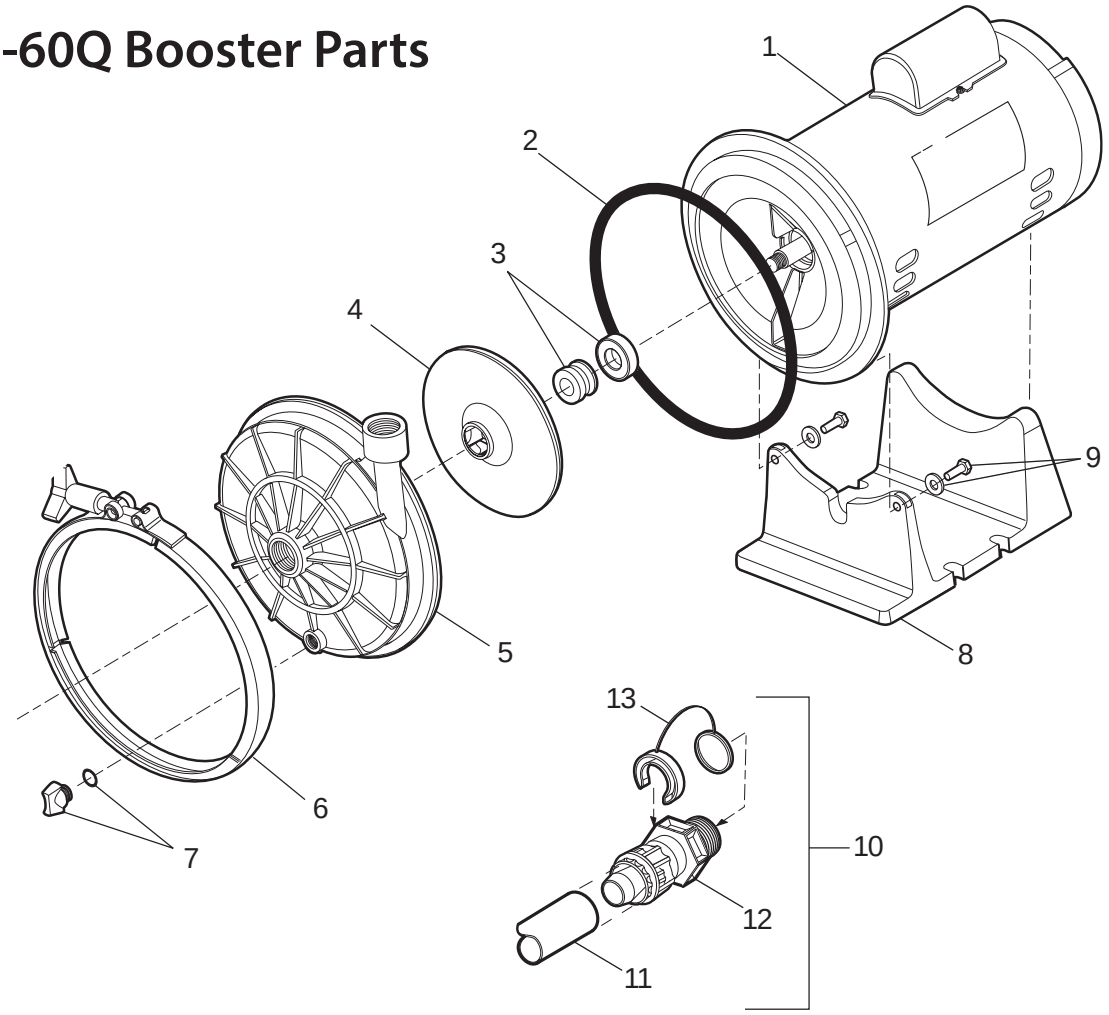

Code	New Product Number	Old Product Number	Key	Description
✻	PLSP85	P85	2	Seal Plate O-ring
CALL	PLSP84	P84	3	Shaft Seal Assembly
✻	PLSP16	ZP16	4	Impeller
	PLSP82	P82	5	Volute with Drain Plug and O-ring
	PLSP88	P88	7	Drain Plug and O-ring
	PLSP17	P17	10	Installation Kit - Includes Keys 11-13
	PLSP19	P19	11	Pump Hose 6'
CALL	PLSP21	P21	13	Quick Connect Retainer

All items cataloged are normally stocked unless noted.
Not Stocked ✻ While Supplies Last

QUALITY POOL SUPPLY

Polaris
180 and 280

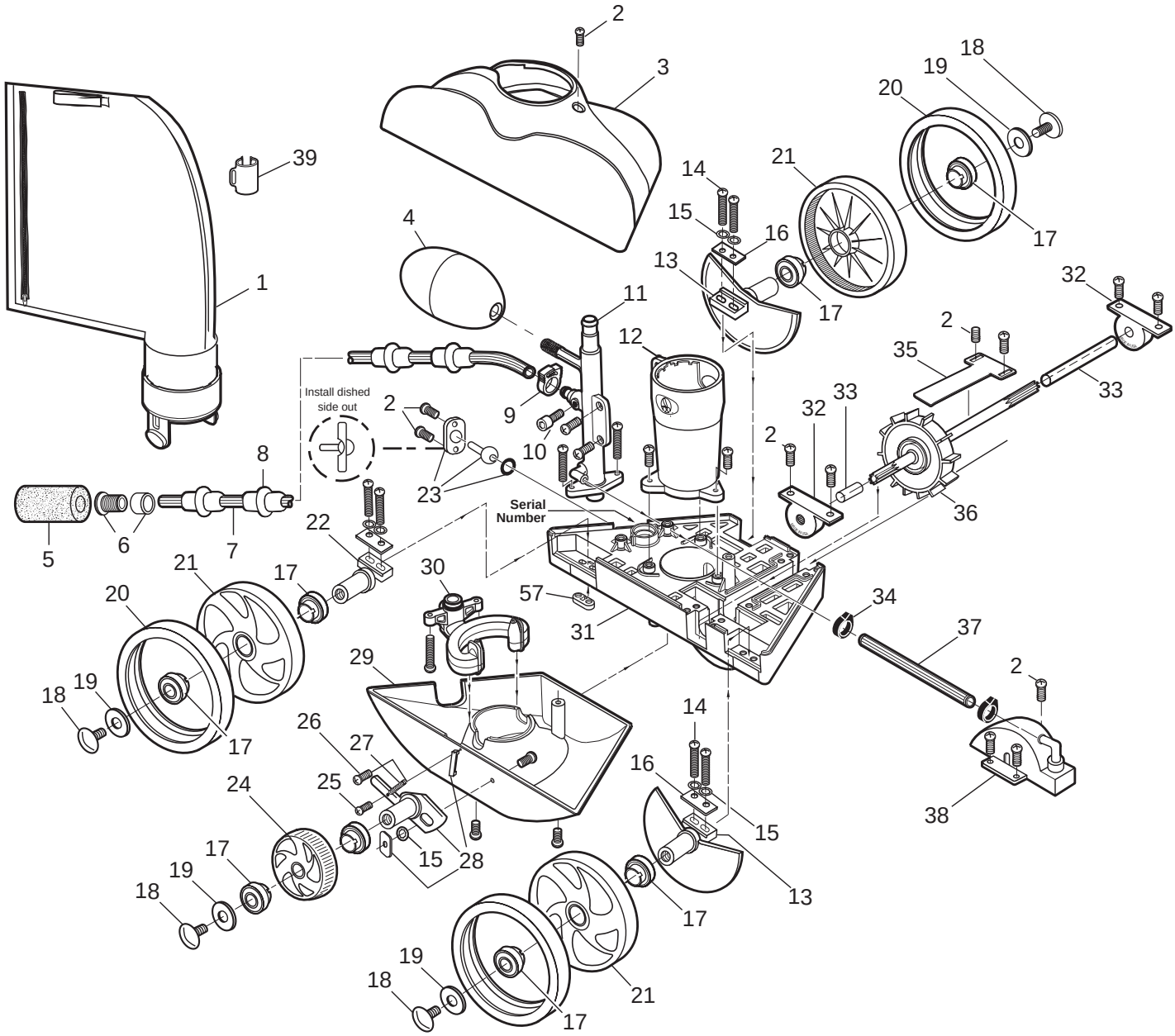

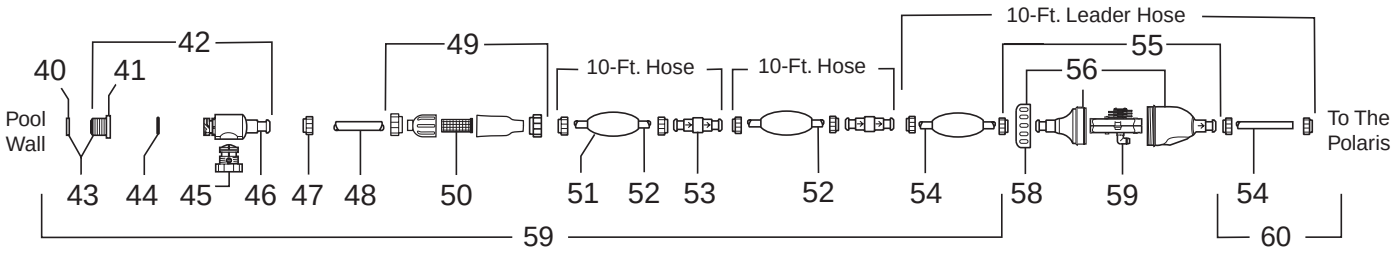

All items cataloged are normally stocked unless noted.

Not Stocked ✻ While Supplies Last

Code	New Product Number	Old Product Number	Key	Description
	PLSK13	K13	1	Zippered All-Purpose Bag (280)
	PLSA16	A16	1	All Purpose Bag (180)
	PLSC40	C40	2	Screw 10-32 X 38" SS Pan Head 10Pk
	PLSA5	A5	3	Top (180)
	PLSA20	A20	4	Float Head
	PLS91003105	9-100-3105	5	Sweep Hose Scrubber
	ZODB25	B25	6	Orifice Tip With Orifice Tip Guard
	PLSB5	B5	7	Sweep Hose Complete
	PLSB15	B15	9	Sweep Hose Attach Clamp
✻	PLSB20	B20	10	Adjustment Screw Sweep Hose
	PLSK30	K30	11	Feed Pipe With Elbow
	PLSC66	C66	13	Axle Large With Sandgravel Guard
✻	PLSC76	C76	14	Screw 10-32 X 7/8" SS Pan Head 2Pk (280)
✻	PLSC75	C75	14	Screw.Nut 10-32 X 7/8" SS Pan Head (180)
	PLSC45	C45	15	Lock Washer For C36 5Pk
	PLSC70	C70	16	Axle Plate For C65C66
	PLSC60	C60	17	Ball Bearing Wheels
	PLSC55	C55	18	Wheel Screw Plastic
	PLSC64	C64	19	Wheel Washer Plastic
	PLSC10	C10	20	Tire Maxtrax
	PLSC6	C6	21	Wheel Large No Bearings Included
	PLSC65	C65	22	Axle Large Rear Wheel Only
	PLSC16	C16	24	Idler Wheel Small
✻	PLSC30	C30	25	Screw 4-40 X 3/16" SS Pan Head 5Pk
	PLSC32	C32	26	Screw 6-32 X 12" SS Pan Head 5Pk
	PLSC25	C25	27	Spring For C36
	PLSC36	C36	28	Swing Axle Kit
	PLSK10	K10	29	Bottom White With Bracket (280)
	PLSA10	A10	29	Base W Bracket (180)
	PLSC80	C80	32	Ball Bearings Turbine
	PLS91007170	9-100-7170	34	Hose Clamp For Water Management System 6Pk
✻	PLSA40	A40	35	Turbine Shaft Shield
✻	PLSC86	C86	36	Drive Shaft Assembly
✻	PLSC120	C120	37	Hose For C110 7-12"
✻	ZODC110	C110	38	Turbine Cover With Elbow
	PLS1011200	10-112-00	40	UWF Restrictor Disk Kit
	PLS650000	6-500-00	41	Universal Wall Fitting All Pressure-Side Products
	PLS91009001	9-100-9001	42	UWF Connector Assembly
	PLS1010800	10-108-00	43	UWF Restrictor Kit
	PLS650500	6-505-00	44	O-ring UWF QD (All Pressure-Side Products)
	PLS91009002	9-100-9002	45	Pressure Relief Valve
	PLSD29	D29	46	Quick Disconnect UWF
	PLSD15	D15	47	Nut Feed Hose
	PLS48080	48-080	49	In-Line Filter Assembly
	PLS48222	48-222	50	Screen In-Line Filter
	PLSD10	D10	51	Float Feed Hose
	PLSD45	D45	52	Feed Hose 10'
	PLSD20	D20	53	Swivel Ball Bearing
	PLSD50	D50	54	Leader Hose 10 Foot
	PLSG52	G52	55	Back-Up Valve Kit
	PLSG54	G54	56	Case Kit For G52
✻	PLSG57	G57	58	Collar Back-Up Valve
	PLSG53	G53	59	Mechanism For G52
	PLSG5	G5	60	Feed Hose Complete With UWF No Back-Up Valve
✻	PLSA30	A30	N/S	Screw #10 X 12" SS Pan Head Self Tap (180)
	ZODC115	C115	N/S	Elbow For C110 Or Feed Mast Tube (180)
	PLS650400	6-504-00	N/S	Filter Screen UWF QD (180)

All items cataloged are normally stocked unless noted.
Not Stocked ✻ While Supplies Last

QUALITY POOL SUPPLY

Polaris

Polaris Vac-Sweep® 360

Part #F1

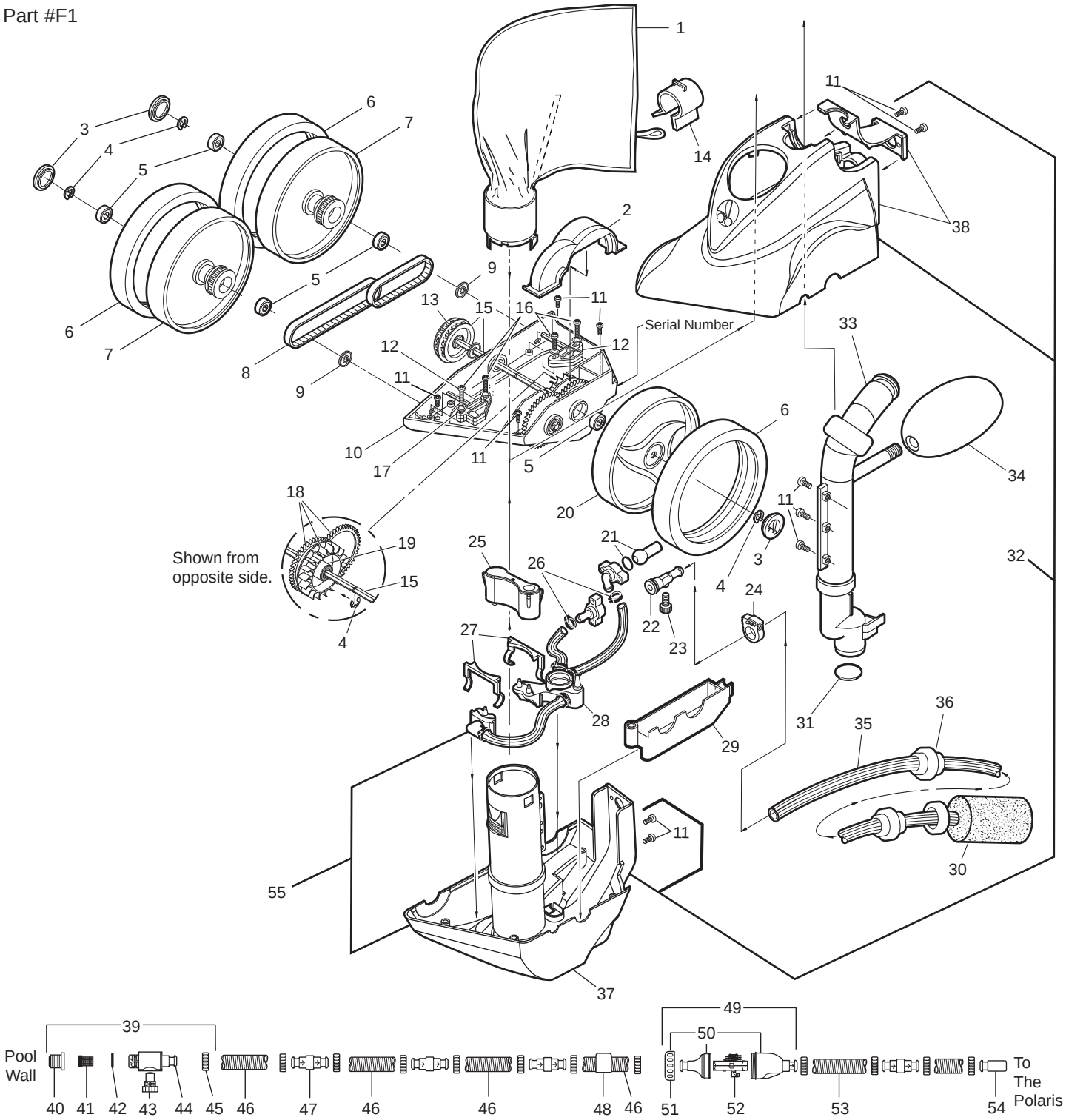

All items cataloged are normally stocked unless noted.

Not Stocked ✻ While Supplies Last

Code	New Product Number	Old Product Number	Key	Description
	PLS91001014	9-100-1014	1	All-Purpose Bag ,380/360
	PLS91001114	9-100-1114	3	Hub Cap, 380/360/340
	PLS91005107	9-100-5107	4	E-clip, Stainless Steel , 380/360/ATV , 5/PK
	PLS91001108	9-100-1108	5	Ball Bearing ,380/360/340
	PLSC10	C10	6	Tire, MaxTrax ,380/360/280/180
	PLS91001008	9-100-1008	7	Wheel, Double-side ,380/360
	PLS91001017	9-100-1017	8	Belt Kit, Small and Large, 380/360
	PLS91007011	9-100-7011	9	Shield, Bearing, 380/360/ATV
	PLS91005125	9-100-5125	11	Screw, 8-32 x 1/2" SS Pan Head, 380/360 , 5/PK
	PLS91001139	9-100-1139	12	Axle Block Kit (Front and Rear), 380/360
	PLS91003135	9-100-3135	14	Bag Clip
✻	PLS91001007	9-100-1007	15	Transfer Pulley/Drive Shaft Assembly, 380/360
✻	PLS91005115	9-100-5115	16	Screw, 8-32 x 3/4" SS Pan Head, 380/360/ATV , 5/PK
✻	PLS91005130	9-100-5130	17	Lock Washer, Axle Block 380/360/ATV , 4/PK
	PLS91001132	9-100-1132	18	Drive Train Gear Kit With Turbine Bearing , 380/360
	PLS91001103	9-100-1103	19	Turbine Wheel with Bearing 360/380
	PLS91001116	9-100-1116	20	Wheel Single Side
✻	PLSB20	B20	23	Adjustment Screw, Sweep Hose ,380/360/280/180
	PLSB15	B15	24	Sweep Hose Attach Clamp ,380/360/280/180
	PLS91003005	9-100-3005	25	Base Weight 360
	PLS91007170	9-100-7170	26	Hose Clamp for Water Management System ,380/360/280/180 , 6/PK
✻	PLS91007009	9-100-7009	27	Jet Retainer, 380/360 , 2/PK
✻	PLS91007014	9-100-7014	28	Water Management System 360
	PLS91001155	9-100-1155	29	Housing, Turbine Lower ,380/360
	PLS91003105	9-100-3105	30	Sweep Hose Scrubber ,380/360/280/180
	PLS91005132	9-100-5132	31	O-ring, Feed Pipe Assembly, 380/360
CALL	PLS91001002	9-100-1002	33	Feed Pipe/Timer Blank Assembly 360
	PLSA20	A20	34	Float, Head ,380/360/280/180
	PLS91007026	9-100-7026	37	Base Assembly, 360/380
	PLS650000	6-500-00	40	Universal Wall Fitting All pressure-side products
	PLS650400	6-504-00	41	Filter Screen, UWF/QD All Pressure-side Products
	PLS650500	6-505-00	42	O-ring, UWF/QD (All pressure-side products)
	PLS91003006	9-100-3006	44	Quick Disconnect, UWF
	PLS91003109	9-100-3109	45	Hose Nut
	PLS91003102	9-100-3102	46	Feed Hose, 6'
	PLS91003002	9-100-3002	47	Swivel, Hose
✻	PLS91001206	9-100-1206	48	Float, Feed Hose,360 360
	PLS91001200	9-100-1200	49	In-line Back-up Valve ,360
	PLS91003103	9-100-3103	53	Feed Hose, 1 Foot
	PLS91006000	9-100-6000	54	Pressure Stick, 360
	PLS91003100	9-100-3100	N/S	Feed Hose Complete with UWF, No Back-up Valve 360

All items cataloged are normally stocked unless noted.
Not Stocked ✻ While Supplies Last

QUALITY POOL SUPPLY

Polaris

Polaris Vac-Sweep® 380

Part# F3

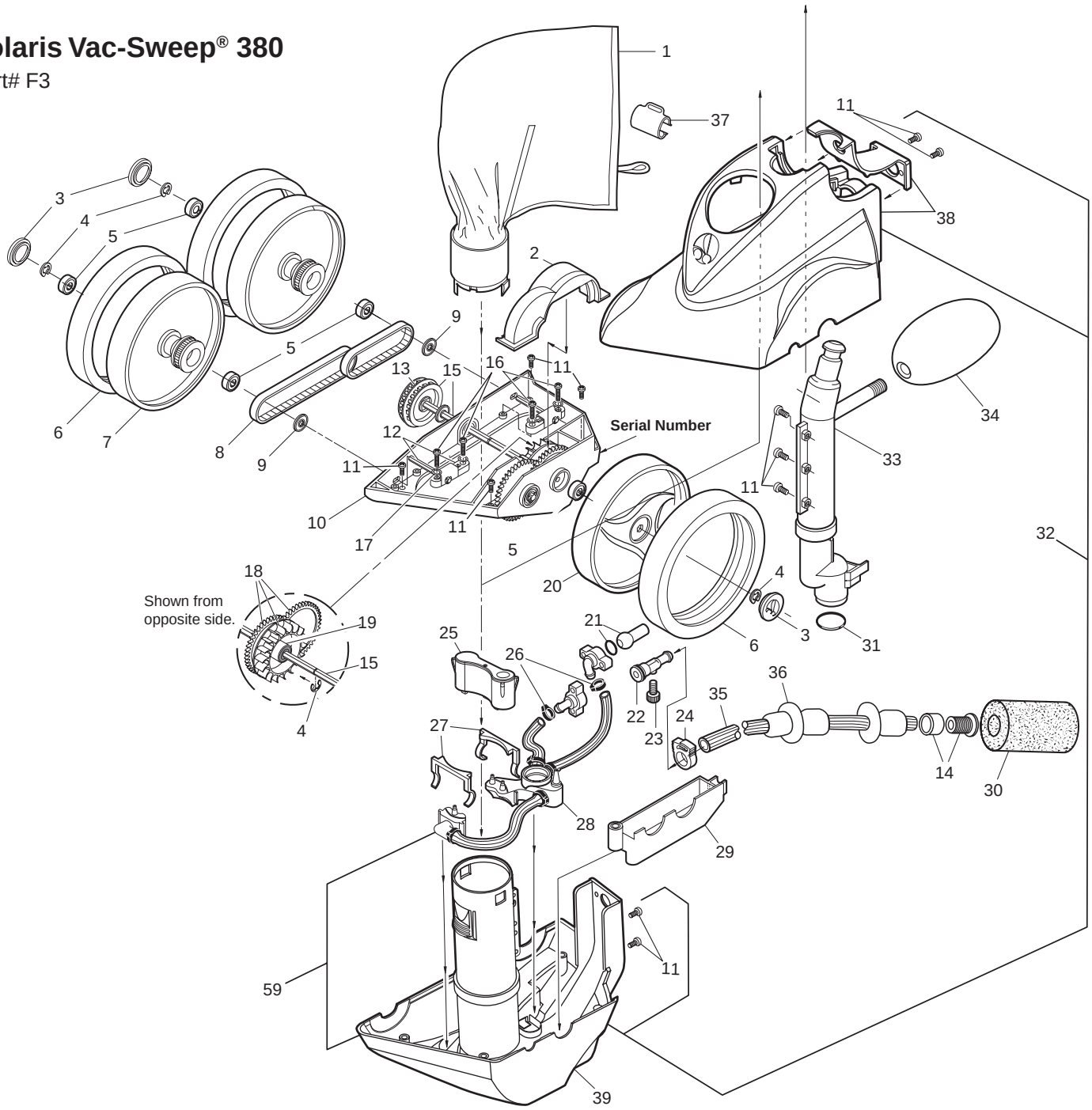

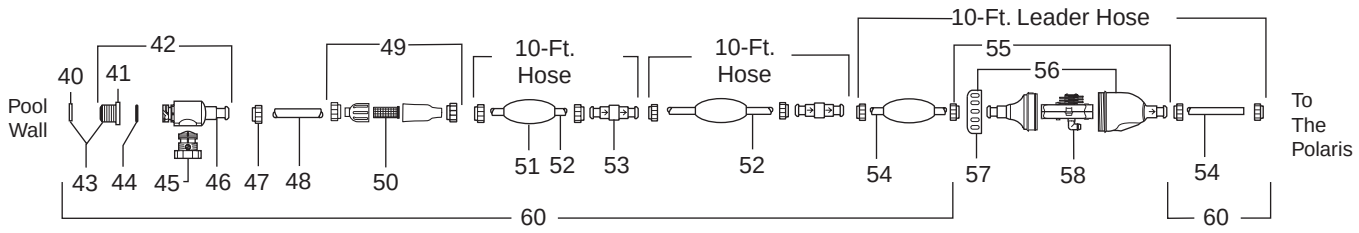

All items cataloged are normally stocked unless noted.

Not Stocked ✻ While Supplies Last

Code	New Product Number	Old Product Number	Key	Description
	PLS91001021B	9-100-1021	1	Zippered All-Purpose Bag
	PLS91001152	9-100-1152	2	Housing Turbine Upper
	PLS91001114	9-100-1114	3	Hub Cap
	PLS91005107	9-100-5107	4	E-clip Stainless Steel ATV 5PK
	PLS91001108	9-100-1108	5	Ball Bearing
	PLSC10	C10	6	Tire MaxTrax
	PLS91001008	9-100-1008	7	Wheel Double-side
	PLS91001017	9-100-1017	8	Belt Kit Small and Large
	PLS91007011	9-100-7011	9	Shield Bearing ATV
	PLS91005125	9-100-5125	11	Screw 8-32 x 1/2" SS Pan Head 5PK
	PLS91001139	9-100-1139	12	Axle Block Kit (Front and Rear)
	PLS91001010	9-100-1010	13	Belt Divider Transfer Pulley
	ZODB25	B25	14	Orifice Tip with Orifice Tip Guard
	PLS91001007	9-100-1007	15	Transfer PulleyDrive Shaft Assembly
	PLS91005115	9-100-5115	16	Screw 8-32 x 3/4" SS Pan Head ATV 5PK
✻	PLS91005130	9-100-5130	17	Lock Washer Axle Block ATV 4PK
	PLS91001132	9-100-1132	18	Drive Train Gear Kit With Turbine Bearing
	PLS91001103	9-100-1103	19	Turbine Wheel with Bearing
	PLS91001116	9-100-1116	20	Wheel Single-side
	PLS91007008	9-100-7008	22	Sweep Hose Barb Complete
✻	PLSB20	B20	23	Adjustment Screw Sweep Hose
	PLSB15	B15	24	Sweep Hose Attach Clamp
	PLS91009004	9-100-9004	25	Base Weight
	PLS91007170	9-100-7170	26	Hose Clamp for Water Management System 6PK
	PLS91007009	9-100-7009	27	Jet Retainer 2PK
	PLS91007010	9-100-7010	28	Water Management System
	PLS91001155	9-100-1155	29	Housing Turbine Lower
	PLS91003105	9-100-3105	30	Sweep Hose Scrubber
	PLS91005132	9-100-5132	31	O-ring Feed Pipe Assembly
	PLS91007030	9-100-7030	32	Top and Base Assembly Complete Kit
	PLS91007003	9-100-7003	33	Feed PipeTimer Blank Assembly
	PLSA20	A20	34	Float Head
	PLSB5	B5	35	Sweep Hose Complete
	PLSB10	B10	36	Wear Rings
	PLS91001018	9-100-1018	37	Bag Collar
	PLS91001240	9-100-1240	38	Top Housing
	PLS91007026	9-100-7026	39	Base Assembly
	PLS1011200	10-112-00	40	UWF Restrictor Disk Kit
	PLS650000	6-500-00	41	Universal Wall Fitting All pressure-side products
	PLS91009001	9-100-9001	42	UWF Connector Assembly
	PLS1010800	10-108-00	43	UWF Restrictor Kit
	PLS650500	6-505-00	44	O-ring UWF QD (All pressure-side products)
	PLS91009002	9-100-9002	45	Pressure Relief Valve
	PLSD29	D29	46	Quick Disconnect UWF
	PLSD15	D15	47	Nut F eed Hose
	PLSD44	D44	48	Baracuda R-Kit Adapter Hose 81/2" Large
	PLS48080	48-080	49	In-Line Filter Assembly
	PLS48222	48-222	50	Screen In-Line Filter
	PLSD10	D10	51	Float Feed Hose

All items cataloged are normally stocked unless noted.
Not Stocked ✻ While Supplies Last

QUALITY POOL SUPPLY

Polaris

Polaris Vac-Sweep© 65, 165, Turbo Turtle

Part# 6-130-00, 6-120-00, 6-130-00T

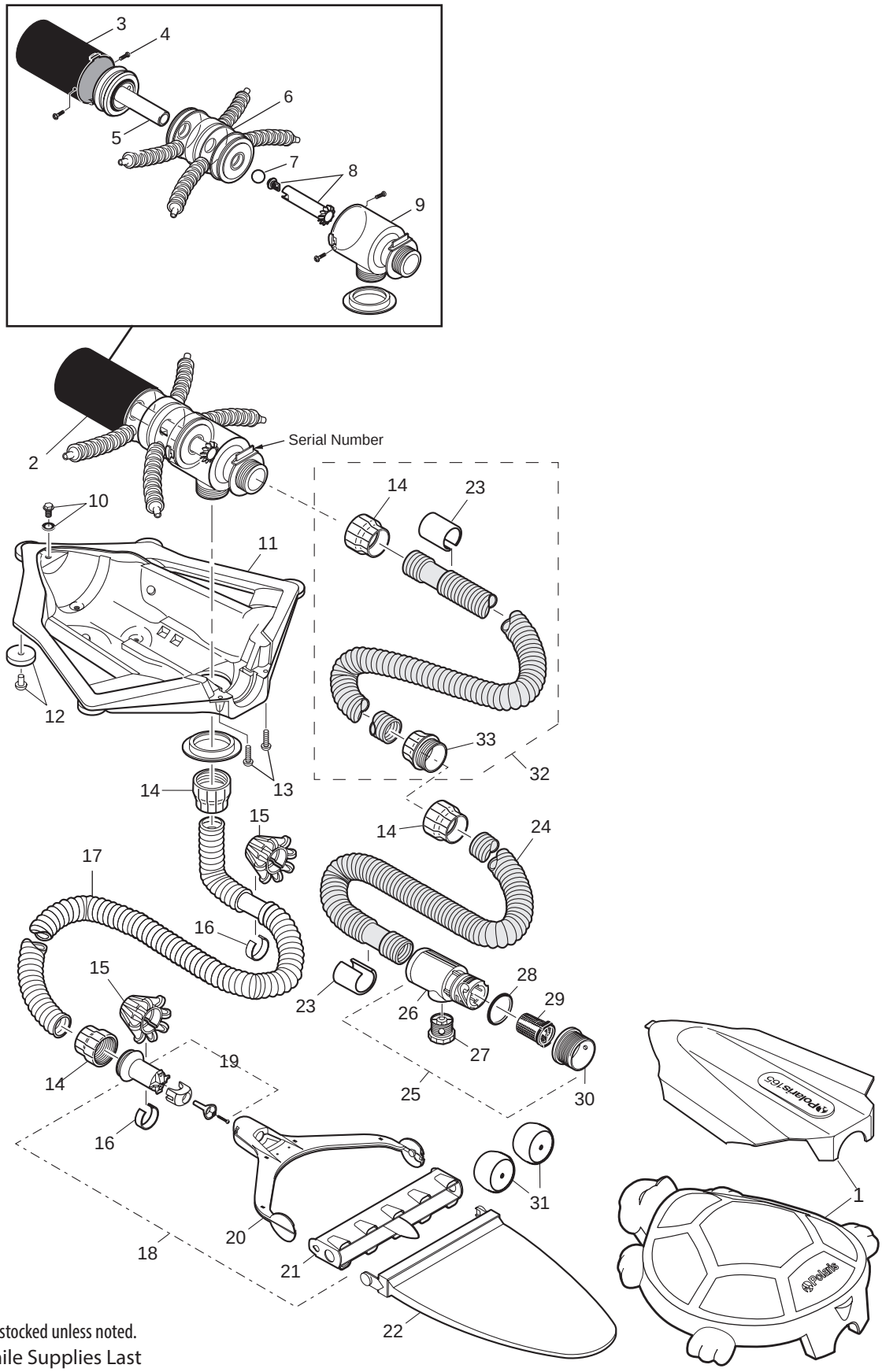

All items cataloged are normally stocked unless noted.

Not Stocked ✻ While Supplies Last

Code	New Product Number	Old Product Number	Key	Description
	PLS630600	6-306-00	1	Surface Module Top, Granite (Polaris 165)
	PLS630900	6-309-00	1	Turtle Top (Polaris 6-130-00T)
✻	PLS640000	6-400-00	2	Mechanism
✻	PLS640700	6-407-00	3	Cylinder
✻	JND641300	6-413-00	4	Screw, Mechanism, #6 x 5" SS Sheet Metal, Blunt-End
	PLS641100	6-411-00	5	Piston Assembly
	PLS640900	6-409-00	6	Center Chamber Assembly
✻	PLS640300	6-403-00	7	Randomizer Ball
✻	PLS640600	6-406-00	8	Filter Connector/Randomizer Tube Kit
✻	PLS640800	6-408-00	9	Connector Chamber
✻	PLS650700	6-507-00	10	Drain Plug Assembly
	PLS630500	6-305-00	11	Body Bottom Assembly
✻	PLS630100	6-301-00	12	Body Bottom Wheel Kit
✻	PLS630200	6-302-00	13	Screw, Top, #10 x 5" SS Sheet Metal, Pan Head
	PLS610400	6-104-00	14	Hose Connector, Female
✻	PLS610700	6-107-00	15	Wheel Cage Assembly
	PLS611000	6-110-00	16	Hose Weight
	PLS611400	6-114-00	17	Sweep Hose Complete, 10 ft. (Polaris 165)
CALL	PLS610600	6-106-00	17	Sweep Hose Complete, 7 ft. (Polaris 65 and 6-130-00T)
	PLS621200	6-212-00	18	Jet Sweep Assembly
	PLS611600	6-116-00	19	Jet Body Assembly
	PLS621100	6-211-00	20	Jet Sweep Harness
	PLS621000	6-210-00	21	Jet Sweep Head
	PLS620600	6-206-00	22	All-Purpose Bag
	PLS622200	6-222-00	23	Float
	PLS622500	6-225-00	24	Float Hose, 24 ft.(Hose Only)
	PLS650800	6-508-00	25	UWF® Connector Assembly
	PLS650200	6-502-00	26	Quick Disconnect, UWF
	PLS650500	6-505-00	28	O-ring, UWF/QD
	PLS650400	6-504-00	29	Filter Screen, UWF/QD
	PLS650000	6-500-00	30	Universal Wall Fitting (UWF)
	PLS1010700	10-107-00	31	Eyeball Regulator
	PLS622100	6-221-00	32	Float Hose Extension Kit, 8 ft.
	PLS610300	6-103-00	33	Hose Connector, Male

All items cataloged are normally stocked unless noted.

Not Stocked ✻ While Supplies Last

QUALITY POOL SUPPLY

HAYWARD

TigerShark by HAYWARD

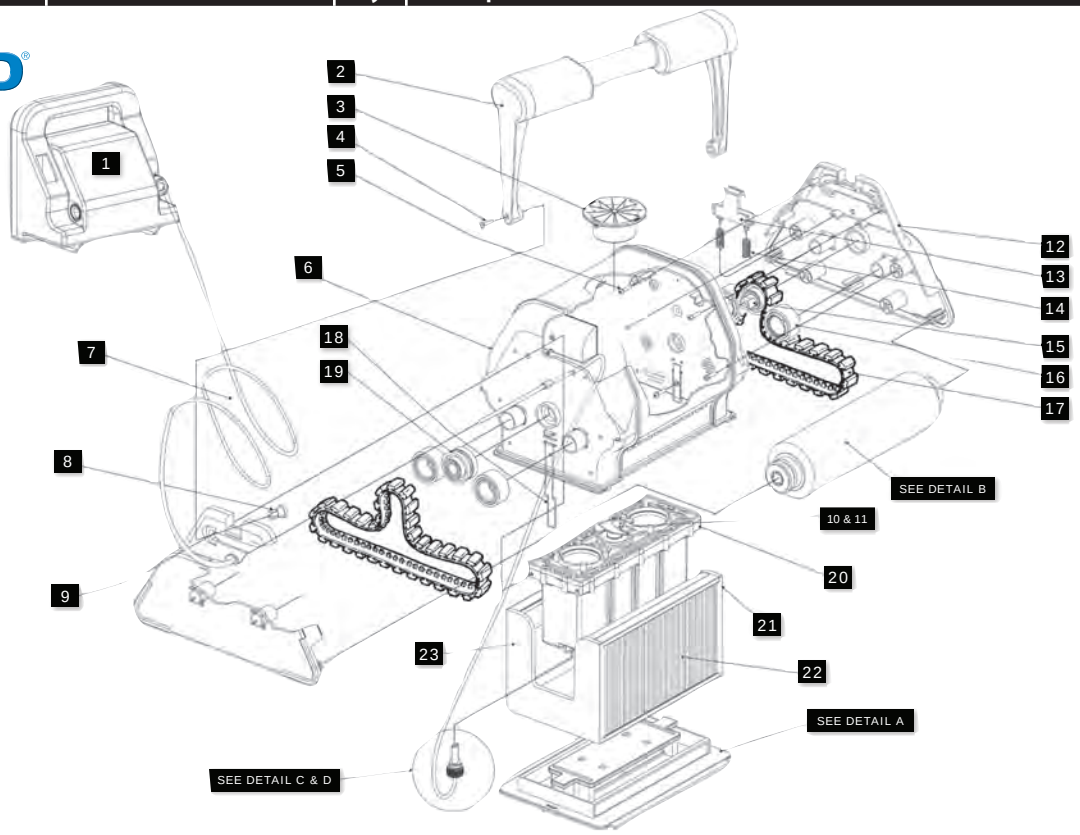

Code	New Product Number	Old Product Number	Key	Description
	HPPRCX97453	RCX97453	1	Power Supply 115v For TigerShark (9950)
	HPPRCX97453QC	RCX97453QC	1	Power Supply 115v For TigerShark QC (9990)
	HPPRCX30000RC	RCX30000RC	1	Power Supply 115v For TigerShark Remote Control (9955)
CALL	HPPRCX76007	RCX76007	2	Handle Assembly - Blue (9950/9955)
	HPPRCX76000	RCX76000	2	Handle Assembly - Teal (9990)
	HPPRCX11208	RCX11208	3	Venturi Assembly
	HPPRCX12011	RCX12011	4&5	Screw (Handle Requires 2, Body Requires 14)
	HPPRCX13001	RCX13001	6	Outer Casing Assembly For 9950
CALL	HPPRCX50061	RCX50061	7	Floating Power Cord Assembly - 55 Ft. (9950/9990)
	HPPRCX50070	RCX50070	7	Floating Power Cord Assembly - 55 Ft. (9955)
	HPPRCX12001	RCX12001	9	Handle Arm Slide Screw
	HPPRCX11000	RCX11000	10	Impeller
	HPPRCX13200	RCX13200	12	Side Cover
	HPPRCX14100	RCX14100	13	Handle Latch
	HPPRCX12100	RCX12100	14	Handle Latch Spring
	HPPRCX26002	RCX26002	15	Drive Pulley Bearing Assembly (Includes RCX26003i Insert)
CALL	HPPRCX26000PAK2	RCX26000	16	Idler Pulley Bearing
	HPPRCX23002	RCX23002	17	Drive Track - Soft Tread
	HPPRCX11400	RCX11400	18	Lid Clip
CALL	HPPRCX26001	RCX26001	19	Guide Roller Bearing
	HPPRCX70100	RCX70100	21	Filter Cartridge Assembly - Frame With filters
	HPPRCX70101PAK2	RCX70101PAK2	22a	Filter Cartridge Refill Set (1 Set=2 Cartridges)
	HPPRCX70103PAK2	RCX70103PAK2	22b	Spring Cleanup Disposable Cartridge Set (1 Set=2 Cartridges)
	HPPRCX70102	RCX70102	23	Filter Cartridge Frame Only
	HPPRCX40209	RCX40209		Remote Control Assembly (9955)
	HPPRCX17000	RCX17000		High Velocity Inlet - 1 Required Per Cleaner

All items cataloged are normally stocked unless noted.

Not Stocked ✻ While Supplies Last

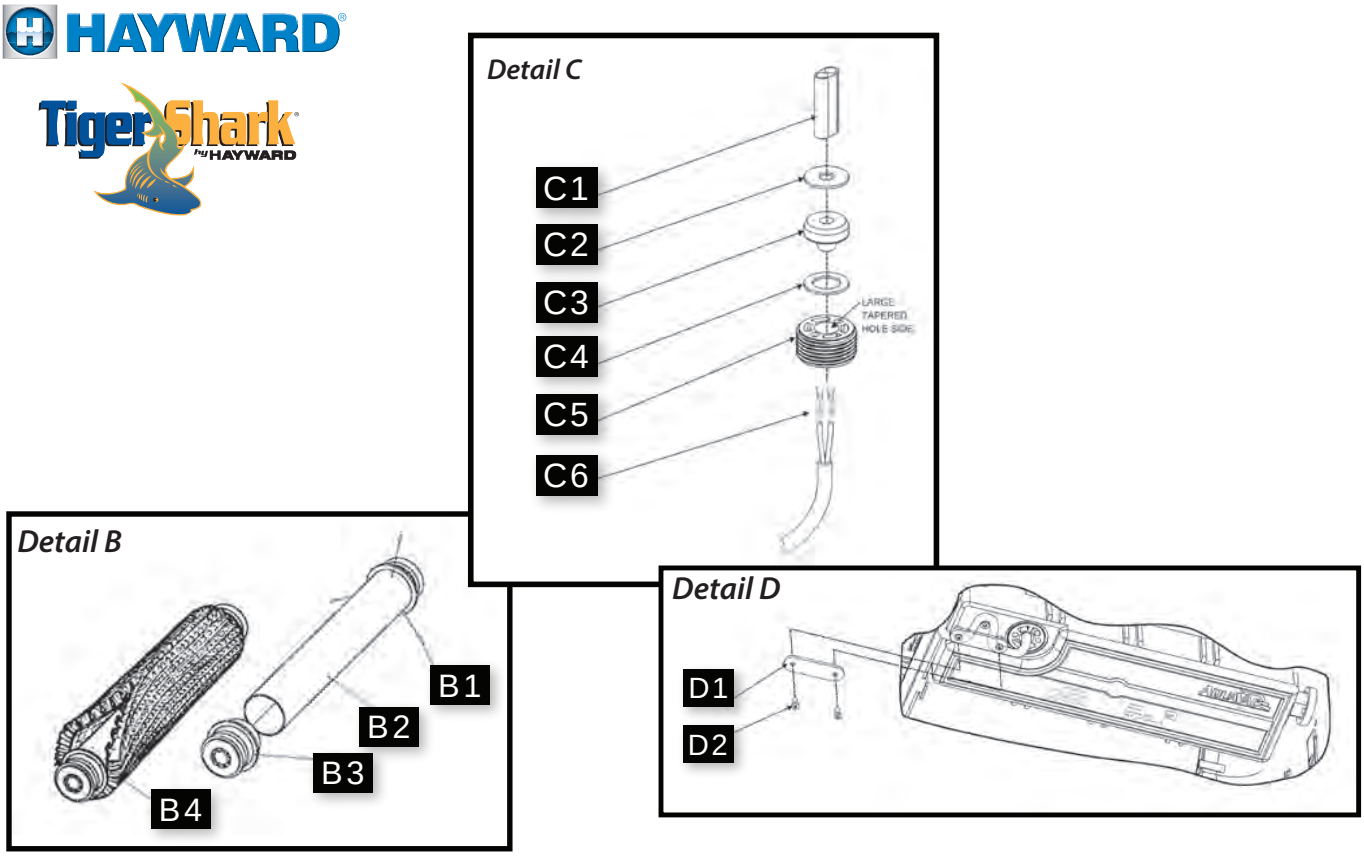

Code	New Product Number	Old Product Number	Key	Description
				Detail A - Bottom Lid Assembly
	HPPRCX12008	RCX12008	A1	Screw - Clip To Locking Plate
	HPPRCX12102	RCX12102	A2	Spring Retainer
	HPPRCX12101	RCX12101	A3	Compression Spring
	HPPRCX75004	RCX75004	A4	Clip Follower
	HPPRCX75002	RCX75002	A5	Support Clip
	HPPRCX12000	RCX12000	A6	Screw - Clip To Bottom Lid
CALL	HPPRCX75003	RCX75003	A7	Locking Plate
	HPPRCX75006	RCX75006	A8	Inlet Cover
	HPPRCX78005	RCX78005	A9	Cover Gasket
CALL	HPPRCX75005	RCX75005	A10	Inlet Flap
				Detail B - Wheel Tube
	HPPRCX26005S	RCX26005S	B3	Wheel Tube Bearing
	HPPRCX26008	RCX26008	B4	Brush
				Detail C - Cord Connection
CALL	HPPRCX59002KIT	RCX59002	C1	Connector Housing
	HPPRCX59004KIT	RCX59004KIT	C5	Seal Plug
CALL	HPPRCX59006	RCX59006	C6	Molex Connector Socket
				Detail D - Cord Connection Strain Relief
	HPPRCX59007	RCX59007	D1	Strain Relief Cover Plate
	HPPRCX12009	RCX12009	D2	Screw - Strain Relief Cover Plate

All items cataloged are normally stocked unless noted.
Not Stocked ✻ While Supplies Last

NOTES

INDEX

FeherGuard 363
GLI Solar Reels 365
Horizon Solar Reels 365
Ideal Solar Covers 360
Rocky's Eazy Rollers 366
Solar Pill 362
Solar Reel Parts 368

QUALITY POOL SUPPLY

Code	New Product Number	Old Product Number	Description

IDEAL POOL PRODUCTS

Boxed Solar Covers

Quantity Discounts
One Invoice Single Destination
5 covers - 5% discount
25 covers - 10% discount

Warranty Information		
7-year	1st, 2nd & 3rd Full	After 3rd year customer calls the factory
6-year	1st & 2nd Full	After 2nd year customer calls the factory
4-year	1st year Full	After 1st year customer calls the factory

Full Warranty Period - customers are to call in a return to their local Quality Pool Supply location to determine credit reviewing the "damaged/warrantied" product.

7 Year Warranty Covers

	MCAIBXSC16X327BB	QSP1632B	16' x 32' Rectangular
	MCAIBXSC18X367BB	QSP1836B	18' x 36' Rectangular
	MCAIBXSC20X407BB	QSP2040B	20' x 40' Rectangular
	MCAIBXSC20X447BB	QSP2044B	20' x 44' Rectangular
	MCAIBXSC24X447BB	QSP2444B	24' x 44' Rectangular

6 Year Warranty Covers

	MCAIBXSC8SQ6BB	QS1288B	8' x 8' Rectangular
	MCAIBXSC12X246BB	QS121224B	12' x 24' Rectangular
	MCAIBXSC14X286BB	QS121428B	14' x 28' Rectangular
	MCAIBXSC16X246BB	QS121624B	16' x 24' Rectangular
	MCAIBXSC16X326BB	QS121632B	16' x 32' Rectangular
	MCAIBXSC16X366BB	QS121636B	16' x 36' Rectangular
	MCAIBXSC18X366BB	QS121836B	18' x 36' Rectangular
	MCAIBXSC18X406BB	QS121840B	18' x 40' Rectangular
	MCAIBXSC20X406BB	QS122040B	20' x 40' Rectangular
	MCAIBXSC20X446BB	QS122044B	20' x 44' Rectangular
	MCAIBXSC24X446BB	QS122444B	24' x 44' Rectangular
CALL	MCAIBXSC25X456BB	QS122545B	25' x 45' Rectangular
	MCAIBXSC26X506BB	QS122650B	26' x 50' Rectangular

All items cataloged are normally stocked unless noted.

Not Stocked ✻ While Supplies Last

Code	New Product Number	Old Product Number	Description

IDEAL POOL PRODUCTS

Boxed Solar Covers

Quantity Discounts
One Invoice Single Destination
5 covers - 5% discount
25 covers - 10% discount

Warranty Information		
7-year	1st, 2nd & 3rd Full	After 3rd year customer calls the factory
6-year	1st & 2nd Full	After 2nd year customer calls the factory
4-year	1st year Full	After 1st year customer calls the factory

Full Warranty Period - customers are to call in a return to their local Quality Pool Supply location to determine credit reviewing the "damaged/warrantied" product.

4 Year Warranty Covers

	MCAIBXSC16X244BB	QS81632B	16' x 32' Rectangular
	MCAIBXSC18X364BB	QS81836B	18' x 36' Rectangular
	MCAIBXSC20X404BB	QS82040B	20' x 40' Rectangular
	MCAIBXSC12RD4BB	QSR812B	12' Round
	MCAIBXSC15RD4BB	QSR815B	15' Round
	MCAIBXSC16RD4BB	QSR816B	16' Round
	MCAIBXSC18RD4BB	QSR818B	18' Round
	MCAIBXSC21RD4BB	QSR821B	21' Round
	MCAIBXSC24RD4BB	QSR824B	24' Round
	MCAIBXSC28RD4BB	QSR828B	28' Round
	MCAIBXSC30RD4BB	QSR830B	30' Round
	MCAIBXSC33RD4BB	QSR833B	33' Round
	MCAIBXSCO12244BB	QSO81224B	12' x 24' Oval
	MCAIBXSCO15274BB	QSO81527B	15' x 27' Oval
	MCAIBXSCO15304BB	QSO81530B	15' x 30' Oval
	MCAIBXSCO16254BB	QSO81625B	16' x 25' Oval
	MCAIBXSCO16324BB	QSO81632B	16' x 32' Oval
	MCAIBXSCO18344BB	QSO81834B	18' x 34' Oval
	MCAIBXSCO18384BB	QSO81838B	18' x 38' Oval
	MCAIBXSCO21414BB	QSO82141B	21' x 41' Oval

Special Order Covers

		4 Year	Special Order Solar Cover, per sq. ft.
		6 Year	Special Order Solar Cover, per sq. ft.

Special Orders:

We will add the **ACTUAL** cost of shipping from the factory to our warehouse to your invoice. Call your local branch to get an estimate.

All items cataloged are normally stocked unless noted.

Not Stocked ✻ While Supplies Last

Code	New Product Number	Old Product Number	Description
			Liquid Solar Blankets • Invisible barrier that conserves water and heat by reducing evaporation • Safe to use with all sanitizing systems
	NCH17100NCM	NAT07100	Natural Chemistry Cover Free 32 oz. (12 / case)
	HAVC005310CS20Q	C005310-CS20Q	Nature's Care Instant Cover 32 oz. (12 / case)
			SolarPill • Automatically dispenses formula when placed in the skimmer basket • Forms an ultra-thin invisible barrier on the surface of the water that reduces heat and chemical loss by reducing water evaporation • Helps extend your swimming season • Lasts up to one month
	NCH90124APL	AP73	Small - up to 12,000 gallons
			Case 12 (10% Discount)
	NCH90123APL	AP72	Large Pool - up to 30,000 gallons
			Case 12 (10% Discount)

All items cataloged are normally stocked unless noted.

Not Stocked ✻ While Supplies Last

Code	New Product Number	Old Product Number		Description
		Inground Reels		5 year warranty. Note: Does not cover consumables (bearings,straps, strap plates, screws). Tarnishing or discoloration of mill tubes can occur and is not covered under warranty.
		FG-1B Reel		Features large 20" wheels with handles on both ends
	FEHFG1B, FEHFGL18M	FG118	18'	Economy tube - mill finish (FG-1B, L18M)
	FEHFG1B, FEHFGIG20	FG120	20'	Deluxe tube - anodized finish (FG-1B, IG-20)
	FEHFG1B, FEHL20M	FG120M	20'	Economy tube - mill finish (FG-1B, L20M)
		FG-3 Deluxe "Low Profile"		Specially engineered for placement under diving boards
	FEHFG3, FEHFGIG20P	FG320	20'	Deluxe tube - anodized finish (10" Clearance Under Diving Board) (FG-3, IG-20P) Accommodates covers up to 40' in length
		Blanket Handler Plus		Heavy duty engineering with larger 4" tubes
	FEHFGBH, FEHFGL18M	BH18	18'	Economy tube - mill finish (FG-BH, L18M)
	FEHFGBH, FEHL20M	BH20	20'	Economy tube - mill finish (FG-BH, L20M)

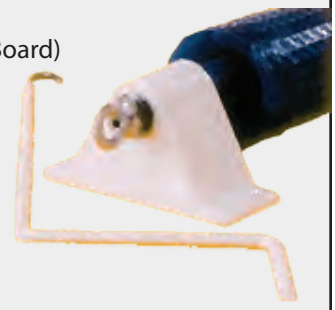

Code	New Product Number	Old Product Number	Description	
			Above Ground Reels 5 year warranty. Note: Does not cover consumables (bearings,straps, strap plates, screws). Tarnishing or discoloration of mill tubes can occur and is not covered under warranty. Demo reels are available at no cost. Contact your sales rep for details.	
			Surface Rider **Complete Reel in One Box** No pool attachment required (can be completely removed from pool)	
	FEHFGSRE, FEHFGSRT18	SRS18	18' (SRE, SRT-18) - mill finish	
	FEHFGSRE, FEHFGSRT24	SRS24	24' (SRE, SRT-24) - mill finish	
			FG-7B Premium Convenient "lift off and swing" feature Features handles at both ends	
	FEHFG7B, FEHFGL18M	FG718	18' (FG-7B, L18M) - mill finish	
	FEHFG7B, FEHL24M	FG724	24' (FG-7B, L24M) - mill finish	
	FEHFG7B, FEHL28M	FG728	28' (FG-7B, L28M) - mill finish	
	FEHFG614	FG614	Extra (3rd) cone for creating a rest when swivelling the tube off the pool	

All items cataloged are normally stocked unless noted.

Not Stocked ✻ While Supplies Last

Code	New Product Number	Old Product Number	Description
		Solar Reels	
		Signature Reel System • Premium bearing system • 1 person operation • Heavy duty tubing - no sagging • 5 year warranty • Casters sold separately • 17" total height	
	HORSIGN18	SIGN-18	12' - 18' Pools
	HORSIGN20	SIGN-20	19' - 20' Pools
	HOR7041	7041	Optional Caster Kit (4)
		Pro-2000 Reel System • Commercial grade materials • Dual bearings per frame provide smooth cover removal • Heavy-duty anodized aluminum tubing • Fits over low profile diving boards (26" height) • Lockable casters included • 7 year warranty	
	HORHV200020	HV2000/20	19' - 20' 6"Pools
	HORHV200022	HV2000/22	21' - 22' Pools
		Inground Solar Reels • Corrosion resistant resin base • Anodized aluminum tube • Includes all straps, hardware, & foot pads • Base and tube kits are UPS able • Crank handle on both ends for 1 or 2 person operation	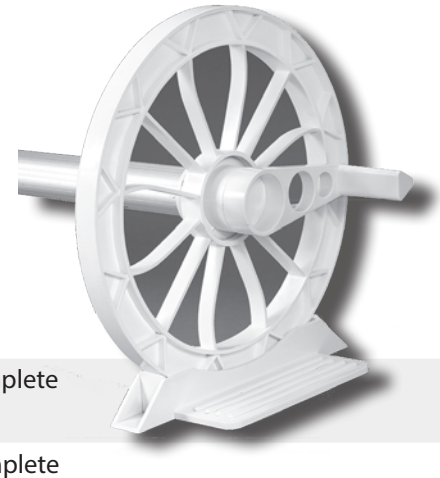
	GLI550000TYBK, GLI551603IGTK	4390160	Typhoon 16' Resin Reel Complete (4390001, 4390016)
	GLI550000TYBK, GLI552003IGTK	4390200	Typhoon 20' Resin Reel Complete (4390001, 4390020)

All items cataloged are normally stocked unless noted.
Not Stocked ✻ While Supplies Last

QUALITY POOL SUPPLY

Code	New Product Number	Old Product Number	Description

Eazy Rollers

The **QUALITY** line of pool cover roller systems.

10 YEAR WARRANTY!

Sturdy die-cast aluminum with white enamel finish.

ROCKY'S

#3A Portable Inground or On Ground

Deluxe 12-sided tube, anodized finish.
Roller ground clearance approximately 9½"

	RSS3A, RSSAT1	RR3A21W	21' Maximum Width White Clear Coated Finish on End Box (RR3A, RRAT1)
	RSS3A, RSSAT2	RR3A24W	24' Maximum Width White Clear Coated Finish on End Box (RR3A, RRAT2)
	RSS307CC, RSSAT1	RR3A21G	21' Maximum Width Grey Clear Coated Finish on End Box (RR3G, RRAT1)
	RSS307CC, RSSAT2	RR3A24G	24' Maximum Width Grey Clear Coated Finish on End Box (RR3G, RRAT2)

ROCKY'S

#4A Permanent Inground

Deluxe 12-sided tube, anodized finish.
Roller ground clearance approx. 6½"
Anchors to concrete deck.

	RSS4A, RSSAT1	RR4A21W	21' Maximum Width (RR4A, RRAT1)
	RSS4A, RSSAT2	RR4A24W	24' Maximum Width (RR4A, RRAT2)
	RSS3	RR3R	4" Hub End Box Complete—Portable (For Irrigation Pipe)
	RSS4	RR4R	4" Hub End Box Complete—Permanent (For Irrigation Pipe)

Standard hubs are 3" diameter. 4" hubs for models #3 and #4 reels are available special order.
4" hubs require 4" irrigation pipe which would be purchased locally.

All items cataloged are normally stocked unless noted.
Not Stocked ✻ While Supplies Last

Code	New Product Number	Old Product Number	Description
		Solar Reel Parts	
		Rocky's Easy Rollers Parts for Model #3A Reel (and others)	
	RSS307CC	RR3G	#3A End Box Complete Grey Clear Coated
	RSS3A	RR3A	End Box Complete—Portable Model
	RSS4A	RR4A	End Box Complete—Permanent Model
	RSSAT1	RRAT1	Tube Box Complete—15'-2" to 21' Adjustable
	RSSAT2	RRAT2	Tube Box Complete—17'-10" to 24'-6" Adjustable
	RSS511	RR511	Anchor Bolt (Package of 2) 3/8" x 6" 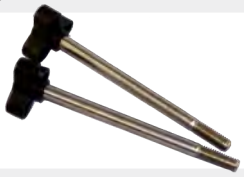
	RSS515	RR515	Drop In Anchor (package of 2)
	RSS517	RR517	Stainless Steel Spring (set of 2 for Anchor Bolt #511)
	RSS545	RR545	Small Handle
	RSS553	RR553	Grommet Pack (50 per pack)
	RSS555	RR555	Black Plastic Bushing Set w/ washer (set of 2)
	RSS577	RR577	Strap Kit - 22' of vinyl strapping, 10 grommets, hole punch
	RSS583	RR583	Caster 2" Plastic (set of 4 w/ Acorn Nut)
	RSS591	RR591	Vinyl Strapping Roll - 150' 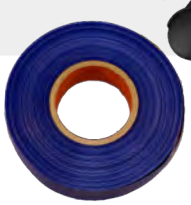

All items cataloged are normally stocked unless noted.
Not Stocked ✻ While Supplies Last

QUALITY POOL SUPPLY

Code	New Product Number	Old Product Number	Description
		Solar Reel Parts	
	FEHFGPFS	FG-PFS	Fasteners (10)
	FEHFGRS26	FG-RS26	Reel Straps (10) Attaches cover to reel
	FEHFGFASKIT	FG-FASKIT	Tube & Blanket Fastening Kit (for any residential Feherguard reel) *Includes (1) FG - PFS and (1) FG-RS26
	FEHFGBS2	FG-BS2	Blanket Straps (2) Secures cover when rolled up
	FEHFG002	FG-002	Wheel Stop (FG-1 or FG-IB)
	FEHFG502	FG-502	Wheel for FG-1B (1) (new style)
	FEHFG614	FG-614	Cone for FG7B
	FEHFGBEA005	FG-BEA005	Widetrack Bearing for FG1B, FG7B, and BL-IGEW
	FEHFGPLGL	FG-PLGL	Tube plug for L18 & L18M tubes
	HORHV20WC	HV-20WC	White Protective Sheet 20' X 40" with Velcro Straps
	HORHV3036	HV3036	Joint Webb 36" - For Pro & Signature Reels
	HORHV7011	HV7011	Strap Kit - Above Ground
✻	HOR7010	7010	Strap Kit - Inground
✻	HOR2008	2008	Return cord reinforcement plates (10)
	GLI99554395000	4395000	Typhoon Reel Wheel
	GLI99554395001	4395001	Typhoon Reel Wheel Footpad
	GLI99554395002	4395002	Typhoon Reel Crank Handle Wheel
	GLI99554395003	4395003	Typhoon Reel Wheel Bearing

All items cataloged are normally stocked unless noted.

Not Stocked ✻ While Supplies Last

PRODUCTS

Air Blowers 389
Air Switches 397
Covers 374
Cover Lifters 380
Fittings 393
Heaters 388
Lights 405
Manifolds 398
Ozone Generators 387
Scents 384
Scumballs 385
Suction Fittings-VGB 396
Summit Spas 370
Vacuums 386

PARTS

Balboa Parts 399
Brett & Catalina 404
Coates Heaters 405
Cords 402
Generic Pack Parts 400
Len Gordon 397
Topside Controls 404

SUMMIT Spas

www.summit-spas.com

Summit Spas™ are made exclusively for Quality Pool Supply by Saratoga Spa & Bath Co. in New York. They have over 45 years experience manufacturing premium spas.

QUALITY POOL SUPPLY

SUMMIT Spas

www.summit-spas.com

Summit Spas™ are made exclusively for Quality Pool Supply by Saratoga Spa & Bath Co. in Latham, New York. They have over 45 years experience manufacturing premium spas. All materials are sourced in the USA. Quality components, workmanship and unique features like our patented waterfall make this a product that your customers are looking for. These are not "bare bones" spas! Standard features include cover, ozone, LED, and beautiful maintenance-free cabinets with a sealed base.

All prices are for Silver Marble shell with Gray cabinet which is our stock color scheme. Silver Marble is the only standard color for Mammoth, Pilot, Rainier, Teton, and Whitney tubs. Please add a $126 special color charge for other shell colors. There are no special color charges for Shasta, Fuji, K2, Denali, and Everest tubs. Please contact your salesman for more information or visit www.summit-spas.com for larger images and additional information.

SHELL OPTIONS		CABINET OPTIONS
Silver Marble (Stocked Color)	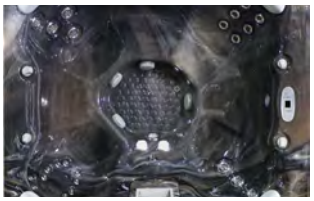 **Midnight Canyon**	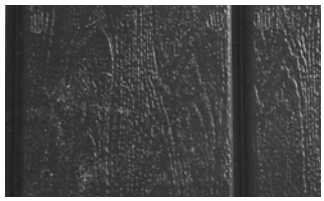 **Gray** (Stocked Color)
Smoky Mountain	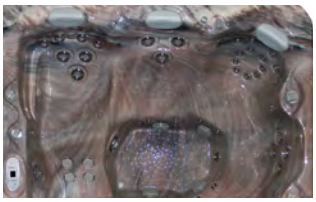 **Tuscan Sun**	**Mahogany**
Whispering Winds	**Sand**	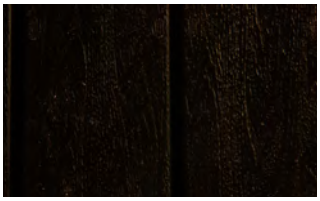 **Black**

All items cataloged are normally stocked unless noted.

Not Stocked ✻ While Supplies Last

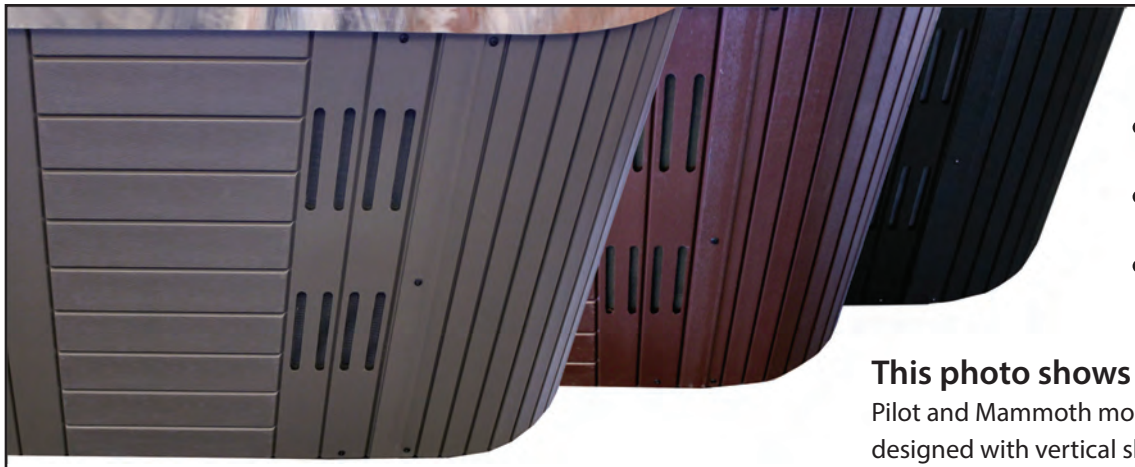

- Gray
- Mahogany
- Black

This photo shows cabinet detail.
Pilot and Mammoth models (round spas) are designed with vertical slats only.

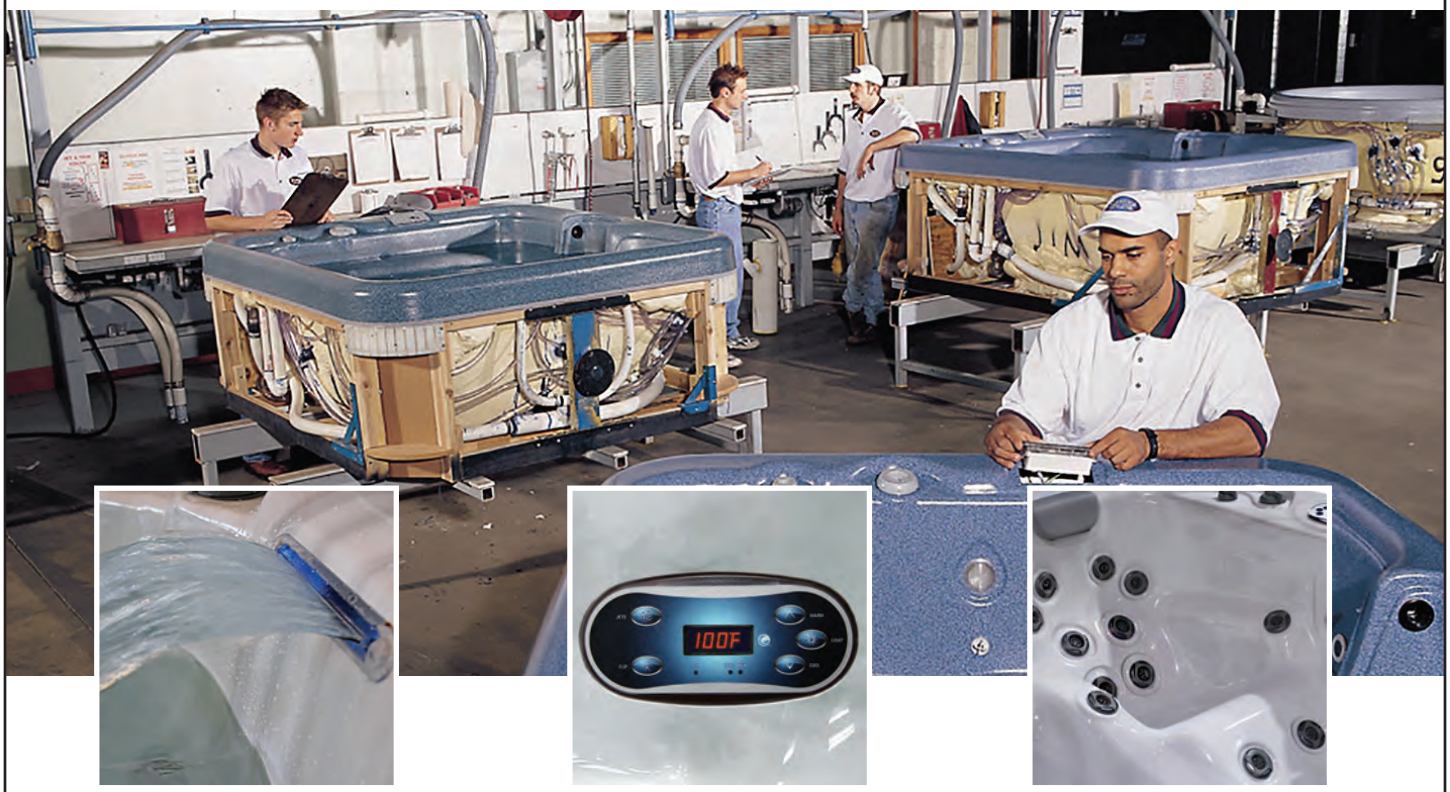

WARRANTY

7

Seven Year Spa Shell Limited Warranty

Saratoga Spa & Bath® Company, Inc. warrants the surface finish of your Summit Spa™ shell against peeling, cracking, or delamination for a period of seven years from effective warranty date.

3

Three Year Plumbing Limited Warranty

Saratoga Spa & Bath® Company, Inc. warrants your Summit Spa™ model against leaks for three years from effective warranty date. This warranty coverage pertains to leaks from the spa shell, internal plumbing, jet fittings and bonded parts.

2

Two Year Component Limited Warranty

Saratoga Spa & Bath® Company, Inc. warrants the factory installed pump(s), heater and controls against malfunctioning, leaking, or defect for a period of two years from effective warranty date.

QUALITY POOL SUPPLY

Models	Features	
TETON (Not Stocked)	• 82" X 59", 29" high • 150 gallons, seats 2 • 13 jets	• (1) 2 speed pump (140 GPM) • LED waterfall, backlit filter bay, & waterline facets
PILOT (Not Stocked)	• 78 ½" round, 36" high • 255 gallons, seats 4-6 • 25 jets	• (1) 2 speed pump (240 GPM) • LED backlit filter bay & waterline facets
MAMMOTH (Not Stocked)	• 92" round, 38" high • 425 gallons, seats 6-8 • 25 jets	• (1) 2 speed pump (240 GPM) • LED waterline facets weir style skimmer
FUJI	• 80" X 57", 29" high • 150 gallons, seats 2 • 20 jets	• (1) 2 speed pump (140 GPM) • LED foot jet, backlit filter bay, waterfall, & waterline facets
SHASTA	• 80" X 67", 34" high • 240 gallons, seats 3-4 • 25 jets	• (1) 2 speed pump (195 GPM) • LED foot jet, backlit filter bay, waterfall, & waterline facets
WHITNEY	• 84" X 80", 36" high • 350 gallons, seats 4-5 • 37 jets	• (1) 2 speed pump (195 GPM) + blower • LED foot jet, backlit filter bay, waterfall, & waterline facets
RAINIER	• 84" X 80", 36" high • 350 gallons, seats 4-5 • 38 jets	• (1) 2 speed pump (195 GPM) + blower • LED foot jet, backlit filter bay, waterfall, & waterline facets
K2	• 84" X 84", 38" high • 375 gallons, seats 5-6 • 42 jets	• (1) 2 speed & (1) 1 speed pump (390 GPM) • LED foot jet, backlit filter bay, waterfall, & waterline facets
DENALI	• 84" X 84", 38" high • 375 gallons. seats 5-6 • 43 jets	• (1) 2 speed & (1) 1 speed pump (390 GPM) • LED foot jet, backlit filter bay, waterfall, & waterline facets
EVEREST	• 93" X 89", 40" high • 525 gallons, seats 6 • 56 jets	• (1) 2 speed & (1) 1 speed pump (480 GPM) • LED foot jet, backlit filter bay, waterfall, & waterline facets

Full Foam Insulation	Available on Fuji, Shasta, Whitney, Rainier, K2, Denali, and Everest.
LE package	Full foam insulation plus upgraded controls and a 35 gpm circulation pump. Available on Fuji, Shasta, K2, Denali, and Everest.
Bluetooth Audio	Bluetooth connected sound system with 2 flat mounted speakers. Includes Subwoofer. *(Bluetooth audio is not available on one pump models).*

Summit Spa Filter Element Replacement Guide

New Product Number	Quality Product Number		WHITNEY	RAINIER	TETON	PILOT	MAMMOTH	FUJI	SHASTA	K2	DENALI	EVEREST
UNFC4314AM	C-4314AM	Filters - 6.5"	2	2		2						
UNFC4327AM	C-4327AM	Filters - 12"			1			2	2	2	2	2
UNF6CH941	6CH-941	Filters - 6"					1					
UNF6CH942	6CH-942	Filters - 6"					1					

Please visit our website for updated information.
www.summit-spas.com

All items cataloged are normally stocked unless noted.

Not Stocked ✻ While Supplies Last

TETON | 59" X 82" X 29"

SUMMIT Spas

Made in USA

PILOT | 78.5" X 36.5"

MAMMOTH | 92" X 38"

Standard Features:

- Cover
- LED Lighting
- High Efficiency Ozone
- Maintenance-Free Cabinet with Sealed Base
- Thermal Wrap Insulation with Sealed Base

www.summit-spas.com

FUJI | 57" X 80" X 29"

SHASTA | 67" X 80" X 34"

RAINIER | 80" X 84" X 36"

WHITNEY | 80" X 84" X 36"

DENALI | 84" X 84" X 38"

K2 | 84" X 84" X 38"

EVEREST | 89" X 93" X 40"

All items cataloged are normally stocked unless noted.

Not Stocked ✻ While Supplies Last

Code	New Product Number	Old Product Number	Description
			Insulated Spa Covers 4" to 2" taper with 4" skirt. Includes 4 lockable, clip-type fasteners, mesh bottom fabric, 1.5 lb. density foam and 2 handles.
	CACCOVER1CASTLE	Cover1 Castle	Up to 72"
	CACCOVER2CASTLE	Cover2 Castle	72.01" to 85"
	CACCOVER3CASTLE	Cover3 Castle	85.01" to 96"
	CACSPECSPACOVER	Specialspacover Castle	Over 96"
	CACBUCKLESET	Buckle Set	Replacement Buckles for Tie-Downs

Cover Color Options
See Next Page

Quantity Discounts
5 of one model - Less 10%

****Please call for approximate lead times****

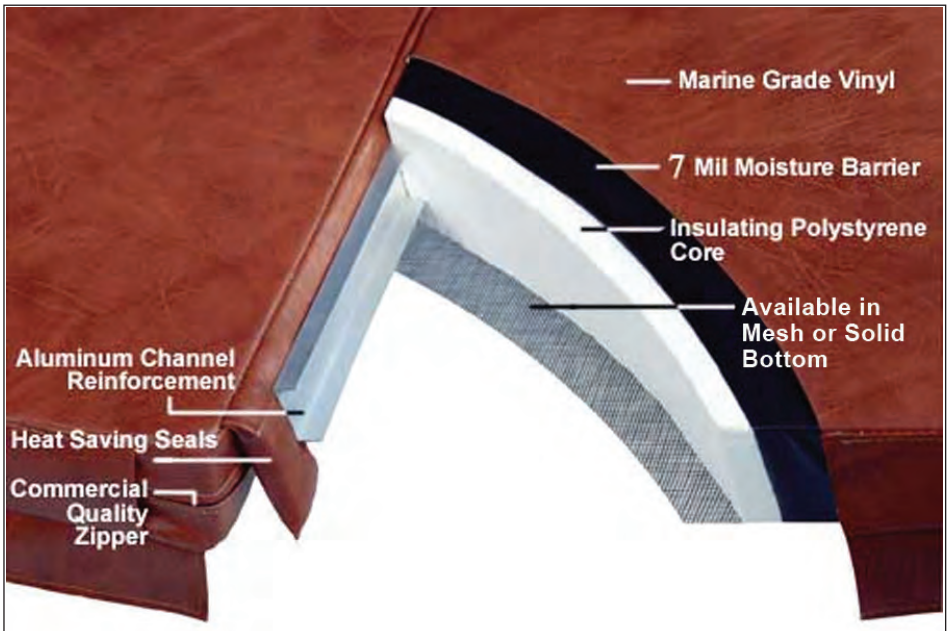

Optional features including but not limited to headrest cutout, added straps, added handles, two pound density foam, double moisture barriers, and replacement vinyl skins may incur additional charges. Please contact Quality Pool Supply for a quote.

			Floating Foam Covers
	HORHV8X8	HV-8X8	8' x 8' Pre-Cut Cover
	HORHV8X250	HV-8X250	96" Wide, Cut from a roll - Price is per foot (May not be available in all locations - call for availability) • Trim cover to fit your spa • Cover is designed to rest on the surface of the water. Retains heat, reduces evaporation and chemical consumption.

All items cataloged are normally stocked unless noted.

Not Stocked ✻ While Supplies Last

CASTLE SPA COVERS Spa Cover Color Choices

TEAK

WALNUT

NUGGET

OYSTER

PORT

FOREST

NAVY

BLUE

TEAL

LIGHT GREY

CHARCOAL

BLACK

VINYL SPECIFICATIONS

- 100% Virgin Vinyl
- 28 Ounce / Linear Yd.
- 100% Polyester Backing
- U.V. Stabilized Pigments
- Cold Crack: -10° F.
- Mildew & Antimicrobial Treated

CHARACTERISTICS

RESISTANCE TO: Ultra Violet, Oil, Mildew, Bromine & Chlorine

Colors are for reference only.

Due to variations in color printing, actual colors may vary slightly from those shown.

Code	New Product Number	Old Product Number	Description
		Insulated Spa Covers	4" to 2" taper with 3" skirt. Includes 4 lockable, clip-type fasteners, solid bottom fabric, 2 lb. density foam and 2 handles.
	NSQPSMLICOVER1	Cover1 Merlin	Up to 86"
	NSQPSMLISPACOVER	Cover2 Merlin	86.5" to 96"
		Specialspacover Merlin	Over 96"

****Please call for approximate lead times and freight charges****

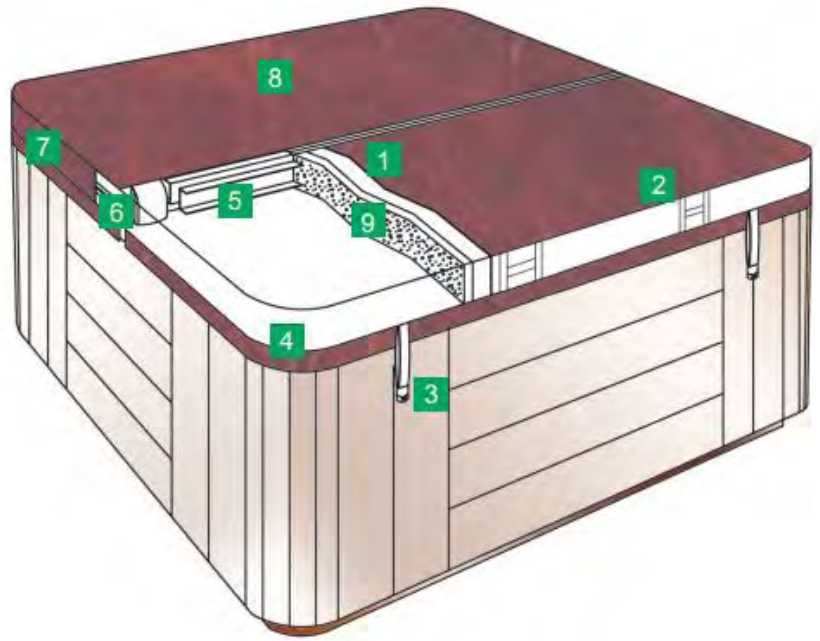

Optional features including but not limited to headrest cutout, added straps, added handles, double moisture barriers, and replacement vinyl skins may incur additional charges.
Please contact Quality Pool Supply for a quote.

1. Heat sealed vapor wrap
2. Integrated, reinforced handles
3. Hold-down straps with locking buckles
4. Double skirt retains hear and protects acrylic spa lip from fading
5. A super-strong 3" galvanized steel C-channel adds superior strength to the cover's center
6. 2 large heat seals lock in heat and lower operating costs
7. Heavy duty nylon zipper
8. Highest quality marine grade vinyl with UV and weather resistant finish
9. Strong tampered highly insulating EPS foam care

		Custom Floating Covers	
	MLITHERMOLITE	Thermolite	Thermo-Lite Floating Spa Cover For larger or freeform in-ground spas where regular foam spa covers can be too heavy or cannot be installed. Thermo-Lite spa covers feature a five year warranty. Thermo-Lite spa covers are not designed to support weight.

All items cataloged are normally stocked unless noted.
Not Stocked ✻ While Supplies Last

MERLIN INDUSTRIES, INC. Spa Cover Color Choices

Custom Spa CSC Covers

VINYL SPECIFICATIONS

- 100% Virgin Vinyl
- 28 Ounce / Linear Yd.
- 100% Polyester Backing
- U.V. Stabilized Pigments
- Cold Crack: -10° F.
- Mildew & Antimicrobial Treated

CHARACTERISTICS

RESISTANCE TO: Ultra Violet, Oil, Mildew, Bromine & Chlorine

Colors are for reference only.

Due to variations in color printing, actual colors may vary slightly from those shown.

CASTLE SPA COVERS Spa Cover Order Form

QUALITY POOL SUPPLY

Dealer Name _____

Phone _____ Fax _____

Tag as (PO#, name, etc.) _____

☐ Delivery (or) ☐ Pickup

Delivery Address _____

City _____ State ____ Zip _____

INTERNAL USE ONLY

S.O.# _____

P.O.# _____

Date Ordered _____

Date Expected _____

Buyer _____

☐ Clio ☐ Perrysburg
☐ Dublin ☐ Byron Center
☐ Akron ☐ Waterford

STANDARD FEATURES
- 4 Straps (8" long)
- 2 Handles
- 4" Skirt
- 4" to 2" 1.5# density foam

OPTIONS
- Control/headrest cutouts
- Additional Straps
- Longer skirts
- Tri-fold two-hinge covers
- Solid Bottom

COLOR (choose one)

☐ TEAK ☐ BLUE ☐ NAVY ☐ PORT ☐ BLACK ☐ TEAL ☐ FOREST ☐ WALNUT ☐ CHARCOAL ☐ NUGGET ☐ LIGHT GRAY ☐ OYSTER

SPECIAL INSTRUCTIONS (cutouts, longer skirt, etc.)

_____

_____

_____

DIMENSIONS (inches)

A _____ D _____

B _____ E _____

C _____ F _____

SPA MAKE/ MODEL / YEAR

_____

_____

_____

SHAPE (choose one)

☐ Rectangle
☐ Four Cut Corner Rectangle
☐ Rounded Rectangle

☐ Square
☐ Four Corner Cut Square
☐ Rounded Square

☐ Round
☐ Octagon
☐ Hexagon

☐ One Cut Corner
☐ Two Cut Corner

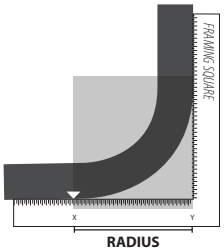

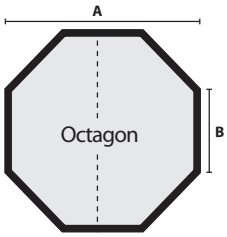

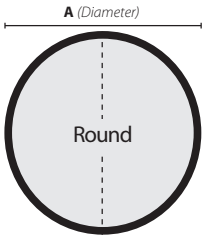

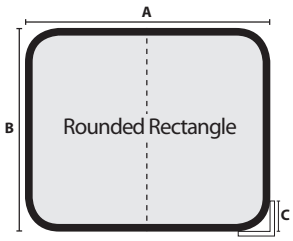

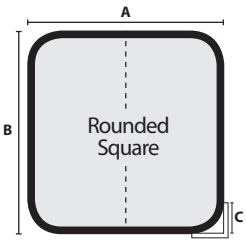

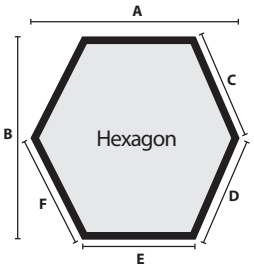

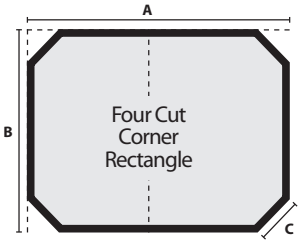

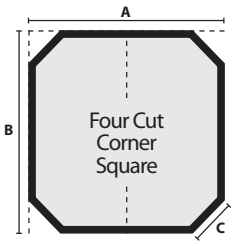

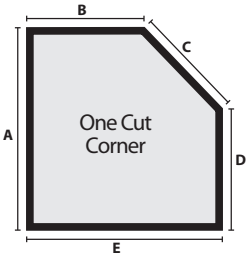

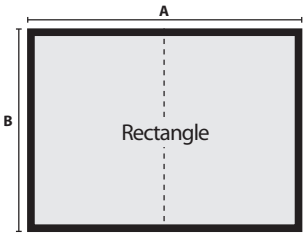

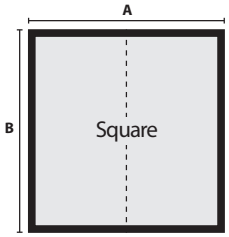

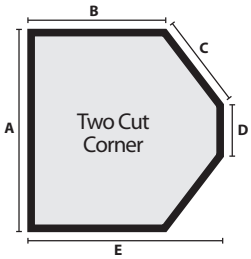

MEASURING INSTRUCTIONS

- Measure to outside of Flange.
- Covers > 96" are special order.
- Shapes not shown will require a template.
- Templates must be made from heavy plastic with the top side marked.
- Must draw in hinge line for one cut corner, two cut corner and hexagon shaped covers. For rectangles, longer side will be halved unless otherwise instructed.

All items cataloged are normally stocked unless noted.

Not Stocked ✻ While Supplies Last

CUSTOM SPA COVER ORDER FORM

AN AFFILIATE OF MERLIN INDUSTRIES,INC 2904 E.State St. Ext. - Hamilton, NJ 08619
Phone 800-289-1836 Fax 800-289-9591

Custom Spa CSC Covers

Distributor Name: _____ Job Name: _____
Dealer Name: _____ PO#: _____
Address: _____ Ship With Other Orders? _____ *WO# or PO#*
City: _____ St: Zip: _____ Shipping Instructions: Pick Up? ☐ Drop Ship? ☐
Contact: _____ Ship To: _____
Phone: _____
Fax: _____

☐ **ORDER** ☐ **QUOTE** ☐ **ORDER W/ Emergency RUSH Service (Extra Charge)**

Please Indicate Hinge Direction or we will split longest length

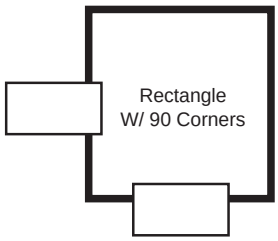

Indicate Strap and Handle Placement

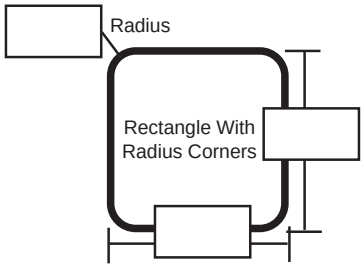

Indicate Strap and Handle Placement

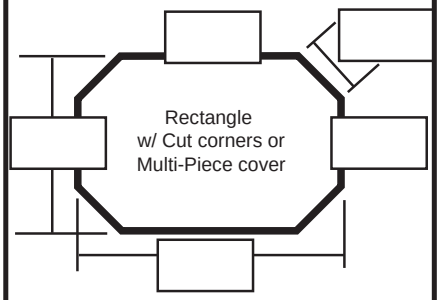

Indicate Strap and Handle Placement

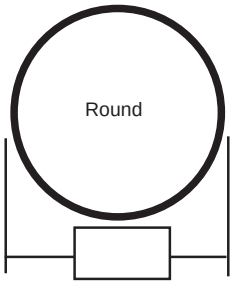

Indicate Strap and Handle Placement

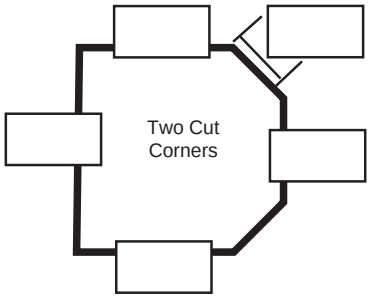

Indicate Strap and Handle Placement

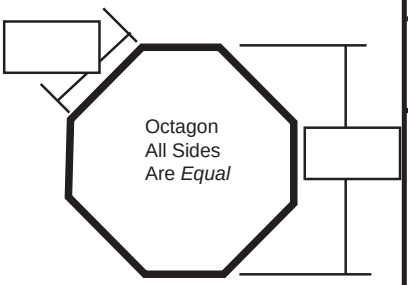

Indicate Strap and Handle Placement

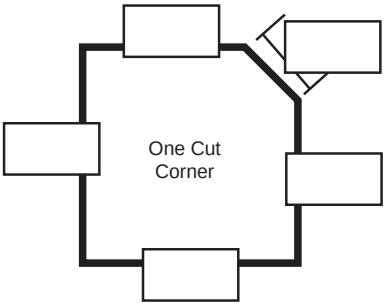

Indicate Strap and Handle Placement

Provide drawing for additional shapes or provide special instructions here.

Grade of Spa Cover:
Economy ☐ Standard ☐ New! ☐
Deluxe ☐ Ultra ☐ Thermo-Light**

Spa Manufacturer:
Brand: _____
Model: _____
Year: _____

For Inground Spas:
Overlap requested on each side: _____
(Not included in dimensionsprovided)
Heavy Duty Bottom Needed (Extra Charge) ☐
Concrete Deck Hold Down Kit ☐

Cover Design:
2 Piece ☐ 3 Piece ☐ Multiple Piece ☐

Foam Material:
3" - 2" Taper ☐
4" - 2" Taper(Std./Dlx.Only)* ☐ *Additional Cost
4" - 3" Taper(Ultra Only)* ☐ *Additional Cost

Skirt Length:
☐ 3" (standard) ☐ Other* _____
*Additional Cost Over 3" Skirt

Bottom Material:
Standard Gray ☐ Heavy Duty Bottom* ☐
*Additional Cost

Color:

Almond ☐	Charcoal ☐	Navy ☐
Ash ☐	Hunter/Forest ☐	Russet (Brown) ☐
Black ☐	Light Blue ☐	Rust ☐
Burgundy ☐	Light Gray ☐	Teal ☐

Green or Blue Solid Safety Cover Material *(5% Upcharge)* ☐
GREEN ☐ BLUE ☐
Kaleidoscapes! Solid Safety Cover Material *(10% Upcharge)* ☐
COLOR _____

Double Vapor Wrap:
Second Vapor Wrap Installed (Addtional Cost) ☐

Please indicate hinge direction. If direction is not indicated, we will split longest length given.
Please indicate strap and handle locations.
***** Thermo-Light Dimensions should be waters edge not coping, cabinet or acrylic dimensions.***
Please modify any of these drawings if necessary to show other cover shapes. Use a separate sheet of paper if necessary. Provide a template for Freeform Covers.

All items cataloged are normally stocked unless noted.
Not Stocked ✻ While Supplies Last

QUALITY POOL SUPPLY

Code	New Product Number	Old Product Number	Description
		Cover Butler • No Cover Handling • Easy to Install • Lifts and Stores Cover • Fits Most Covers up to 96" • No Gas Struts to Fail • Covers Last Longer • Great for Older Users	
	ASMCBA	CB	Cover Butler
	ASMCBA	CB	Quantity of 4 or more
	ASMCBA	CB	Quantity of 24 or more
		Cover Butler Parts	
	ASMCBKIT	CB-KIT	Parts Bag for Cover Butler
	ASMMB	MB	Replacement Mounting Block
	ASMAT42	AT42	42" Side Arm
		AT58	58" Bridge Arm
		Confer Step Handi Step 2 (Round and Straight Step)	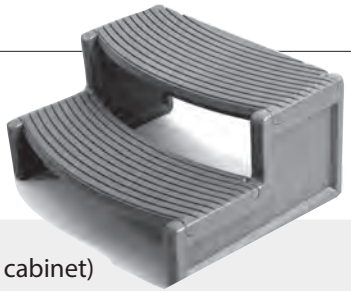
	CPIHS2E	HS2-E	Espresso (matches Mahogany Summit Spa cabinet)
	CPIHS2G	HS2-G	Light Gray
	CPIHS2T	HS2-T	Tan
		Spa Pad	
	CPISP3248	SP3248	32" x 48" x 2" (case of 3) Two cases of three makes an 8' x 8' spa pad. (Individual pieces lock together)

All items cataloged are normally stocked unless noted.

Not Stocked ✻ While Supplies Last

Code	New Product Number	Old Product Number	Description
COVERVALET THE CONSUMERS' CHOICE.		**Cover Valet**	
	CVACV250	CV250	**Cover Valet 250 Model for spas up to 95"** The Cover Valet is the world's leading premium spa cover removal system. Dual gas springs assist in effortlessly lifting and lowering the cover. A locking safety feature holds the cover open until it is time to be closed. Features a powder coat finish and stainless steel hardware. Requires only 4" to 6" of clearance. Accessory brackets are available to fit specific spa manufacturers' needs. Five year limited warranty.
COVERVALET THE CONSUMERS' CHOICE.		**Cover Rock-It™**	
	CVACR	CR	**Cover Rock-It** The Cover Rock-It™ is a superior and affordable cover lift that offers a simplistic design. Fits most spas up to 96". Under spa plates are held securely in place by the weight of the spa. Requires as little as 18" of clearance. When folded down, the cover stores neatly on the side to provide a full view. Zinc-plated and powder coated finish. Five year limited warranty.
COVERVALET THE CONSUMERS' CHOICE.		**Cover RX**	
	CVACRX	CRX	**Cover RX** The new Cover Rx is compatible with virtually any above-ground spa on the market today. The Rx can be installed on any side of your spa and requires only 14" of clearance. The Rx will be a perfect fit and requires no drilling into your spa cabinet. Your cover is supported entirely by the Rx and does not place any unwanted stress on the center cover seam, which translates to a longer cover life. Can be operated by a single user from any position - from the side of the spa, from the back, or even inside of the spa. Features a single gas shock and is constructed of powder coated aluminum. Five year limited warranty. 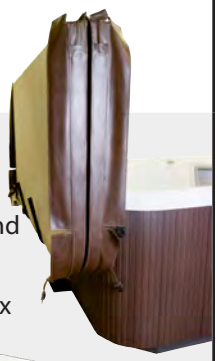

Code	New Product Number	Old Product Number	Description
COVERVALET THE CONSUMERS' CHOICE.		**Cover Caddy**	Undermount Feature
	CVACOVERCADDY	COVERCADDY	**Cover Caddy** This gas spring assisted cover lift defines effortless spa cover removal. It's unique design allows installation on round, octagonal, and spas with large radius or cut corners. The powerful gas spring makes lifting and lowering the spa cover super easy. The under-mount base plate makes for a complete installation within minutes. Made of powder coated aluminum and includes spacers for covers with 6"–4" tapers. Five year warranty.
	CVACVEX	CVEX	**Cover Ex Lifter** • All-aluminum construction with reinforced aluminum mounting brackets (no plastic) • Requires 12" of clearance behind the spa • Works with square and rectangular spas up to 104" in size • Zinc plated and powder coated for added longevity • Features a five year limited manufacturer's warranty
COVERVALET THE CONSUMERS' CHOICE.		**Spa Side Step**	
	CVASSSWG	SSSWG	Warm Gray
	CVASSSJV	SSSJV	Java
	CVASSSRW	SSSRW	Redwood

Reversible treads for use with round or square spas, maintenance free blow-molded plastic,
Height: 16", Overall Depth: 24," Tread Width: 32"

All items cataloged are normally stocked unless noted.

Not Stocked ✻ While Supplies Last

Code	New Product Number	Old Product Number	Description
COVERVALET THE CONSUMERS' CHOICE.			**Spa Side Handrail with LED & Base**
	CVASSHR	SSHR	**Spa Side Handrail with LED & Base** The Spa Side Handrail™ is the most user-friendly spa side assist product on the market. The Spa Side Handrail slides under the spa cabinet for complete installation and requires no hardware or assembly. The attractive carbon gray powder coat is accented by the new battery-powered LED mood lighting located on the interior curve of the rail.
COVERVALET THE CONSUMERS' CHOICE.			**Spa Side Umbrella™** ***Great for display spas!*** The leading alternative to traditional gazebos. Its versatility allows for 360 degrees of travel as well as a crank and tilt mechanism that affords trouble free operation. One year warranty – please note that the warranty does not include wind damage.
	CVASSURT	SSURT	Umbrella with base - Rust
	CVASSUNV	SSUNV	Umbrella with base - Navy
COVERVALET THE CONSUMERS' CHOICE.			**Spa Crystals Assorted Case**
*	CVASPACRYSTALS	SPACRYSTALS	The Spa Crystals fragrance line features a unique blend of plant extracts and essential minerals. There are 2 pounds of fragrance crystals and scooper inside each unique and attractive re-sealable package. Six different scents packaged in each case. (Pomegranate, Jasmine, Lavender, Eucalyptus, Cucumber Melon, Lime Basil Mandarin)
COVERVALET THE CONSUMERS' CHOICE.			**Spa Side Towel Tree™** 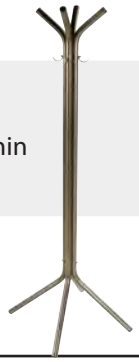
	CVATTPWT	TTPWT	**Spa Side Towel Tree™** The Spa Side Towel Tree™ is the stylish way for a spa owner to keep their towel off of the ground and within reach. One year non-prorated warranty.
	CVAWSBLK	WSBLK	**Water Seat - Black**

All items cataloged are normally stocked unless noted.

Not Stocked * While Supplies Last

QUALITY POOL SUPPLY

inSPAration

Will not clog filters, stain, discolor tubs or affect pH.

9 oz. bottles - Priced each - 12 / case - Sold by each or by case

Code	New Product Number	Old Product Number	Description	
CALL	INI8LA	8LA	9 oz.	Lavender
CALL	INI8WA	8WA	9 oz.	Watermelon
	INI8AD	8AD	9 oz.	Apple Delight
	INI8AP	8AP	9 oz.	April Showers
	INI8CB	8CB	9 oz.	Cherry Blossom
	INI8CL	8CL	9 oz.	Coconut Lime Verbena
	INI8CM	8CM	9 oz.	Coconut Mango
	INI8CU	8CU	9 oz.	Cucumber Melon
	INI8EM	8EM	9 oz.	Eucalyptus Mint
	INI8GA	8GA	9 oz.	Gardenia
	INI8HA	8HA	9 oz.	Hawaiian Sunset
	INI8HO	8HO	9 oz.	Honeysuckle
	INI8JA	8JA	9 oz.	Jasmine
	INI8JS	8JS	9 oz.	Just Soft
	INI8MG	8MG	9 oz.	Mangosteen and Goji
	INI8MU	8MU	9 oz.	Musk
	INI8OR	8OR	9 oz.	Orangesicle
	INI8PE	8PE	9 oz.	Peach
	INI8RA	8RA	9 oz.	Rain
	INI8RO	8RO	9 oz.	Romance
	INI8SP	8SP	9 oz.	Spring Bouquet
	INI8SB	8SB	9 oz.	Spa Berry
	INI8TT	8TT	9 oz.	Tahitian Tropic
	INI8TQ	8TQ	9 oz.	Tranquility
	INI8TI	8TI	9 oz.	Tropical Island
	INI8VA	8VA	9 oz.	Vanilla Twist

10% Discount on Case of 12 of Same Fragrance

All items cataloged are normally stocked unless noted.

Not Stocked ✻ While Supplies Last

Code	New Product Number	Old Product Number	Description
		inSPAration Will not clog filters, stain or discolor tubs or affect pH	
	INI740ASB	SPABOMBA	5oz. Insparation SpaBomb - assorted - case of 12
	INIINPAKSB	INPAK-SB	Sampler Bags Case of 12 Bags of 6 1/2 oz. assorted pillows.
	INIINPAKAS	INPAK-AS	36 x 1/2 oz. Assorted
	INIINDP	INDP	Fishbowl Display (48 x 1/2 oz. Assorted)
		SCUMBALL™	
	HORSCUMBALL	Scumball	**SCUMBALL™** - Package of 2
			SCUMBALL™ - Case of 24 packages (Save 5% by the case)
		SCUMBUG™	
	ROLTB124	SB	**Scumbug** - Package of 1

All items cataloged are normally stocked unless noted.
Not Stocked ✻ While Supplies Last

QUALITY POOL SUPPLY

Code	New Product Number	Old Product Number	Description
	RAINBOW	**Spa Vacuums**	
	PENR201146	R201146	Spa-Vac - Use with garden hose or 1¹/₄" or 1¹/₂" vacuum hose. 204
	PENR191128	R191128	6' Plastic Handle/Pole
	ZODIAC	**Spa Wands**	
	ZOD540000	5-400-00	Polaris Spa Wand (Individual Blue Box)
	ZOD520000	5-200-00	Polaris Spa Wand Pro.
	ZODIAC	**Spa Wand Parts**	
*	ZOD511300	5-113-00	#1 Dual Purpose nozzle
	JND511100	5-111-00	#2 Wide sweep nozzle
	JND511400	5-114-00	#3 End cap & valve assy
	JND511600	5-116-00	#5 Filter Screen
	PARADISE INDUSTRIES	**Spa Vac**	
	ROLNPSV6	SPAVAC	**Paradise Spa Vac** Sold Individually This vac is exceptionally easy to use and requires no pumping, batteries or water hookups. It is totally self-contained and the only vacuum on the market with a telescoping aluminum pole, making it possible to clean even an in-ground spa without bending over.

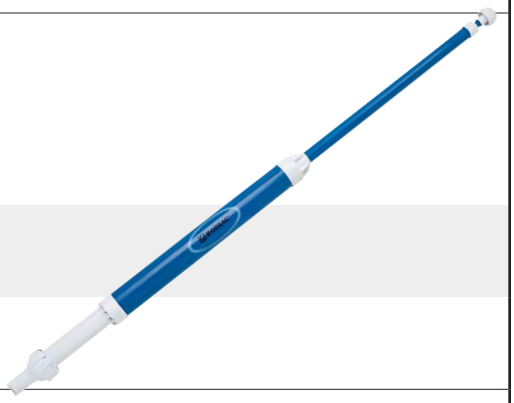

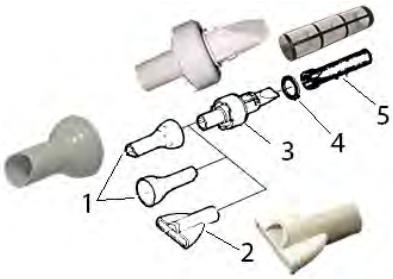

All items cataloged are normally stocked unless noted.

Not Stocked * While Supplies Last

Code	New Product Number	Old Product Number	Description
			Ozone Generators
	CMPECS1RPAM2U	ECS-1RPAM2-U	**Spa Eclipse Universal 120/240V** Corona discharge Ozonator With amp cord and parts bag. Ozone systems provide clean, clear and safe water for your spa, as well as a significant reduction in chemical sanitizer use. • Destroys Chemical Resistant Organisms • Oxidizes Contaminants • Penetrates Biofilm Buildup • Micro-Clarifies Spa Water • Reduces Chemical Demand
			DEL Parts
	WWP7151261	715-1261	¼" Barb x ¼" MPT Barb Adapter

All items cataloged are normally stocked unless noted.
Not Stocked ✻ While Supplies Last

QUALITY POOL SUPPLY

Code	New Product Number	Old Product Number	Description

Spa Heaters

E3T Electric 3-Series Titanium Pool and Spa Heater

The Electric 3-Series Titanium heater is the latest technology in pool and spa heating. The E3T is built with titanium heating elements and 316L stainless steel to withstand extreme pool water conditions, including salt water chlorinated pools. The E3T heater operates by utilizing the latest solid-state design and flow sensor technology. It has easy to use digital controls with diagnostics. The compact size makes it is easy to install for new construction or replacement installations.

CALL	RAY017121	RAY017121	5.5 KW ELS-R-0005 1 T1 240V 1 Phase
CALL	RAY017122	RAY017122	11 KW ELS-R-0011-T-T1 240V 1 Phase
CALL	RAY017123	RAY017123	18 KW ELS-R-0018-1-T1 240V 1 Phase
CALL	RAY017124	RAY017124	27 KW ELS-R-0027-1-T1 240V 1 Phase

Residential Electric Spa Heaters

- Close differential thermostat
- Stainless steel tank
- UL Listed
- Indoor or outdoor installation
- Element "on" pilot light
- Manual reset hi-limit
- Incoloy heating element

Residential Inline Spa Heater

	COA6ILS	6ILS	5.75 KW, 240V, 23A, 20,478 BTU Features replaceable incoloy heating element and pressure switch.

*Coates also offers a wide variety of commercial heaters, even for salt systems. Contact your salesman for more information.

Code	New Product Number	Old Product Number	Description
		Air Blowers	
		Santanna II	• Side or bottom mount (plug included for unused outlet) • Internal Check Valve • Full 1-year warranty (no water damage)
	WWP750310128O	750-3101-28O	1 HP 110V 7.0 Amps
	WWP750320128O	750-3201-28O	2 HP 110V 9.0 Amps
	WWP750310228O	750-3102-28O	1 HP 220V 3.5 Amps
	WWP750320228O	750-3202-28O	2 HP 220V 6.0 Amps
		Silent Aire Blower	The Silent Aire blower series offers a sleek, quiet and compact design that makes it the most innovative blower for spas.
	HDQAS610U	AS-610U	1 HP 120V 4.4 Amps
	HDQAS620U	AS-620U	1 HP 240V 2.4 Amps
	HDQAS810U	AS-810U	1.5 HP 120V 5.8 Amps
	HDQAS820U	AS-820U	1.5 HP 240V 3.1 Amps
	HDQ301200L48	30-1200-L48	Lighted Cord for Silent Aire Blowers - 48" Mini J&J
		Spa Blower	Enjoy the soothing effects of powerful, invigorating bubbles in your spa without excess equipment noise. The Jandy Air Blower offers reduced noise level for a peaceful spa experience.
	JNDPSB120	PSB120	Air Blower 2 HP/120v
	JNDPSB220	PSB220	Air Blower 2 HP/220v

All items cataloged are normally stocked unless noted.
Not Stocked ✻ While Supplies Last

QUALITY POOL SUPPLY

Code	New Product Number	Old Product Number	Description
HYDROQUIP			**CS6000 "Skid" System** 1 Year Limited Warranty • **Silent Aire Series** air blower, 1 HP • Convertable - 1.375 / 5.5kw heater • Low watt density heater element constructed of high grade Incoloy 800 for long life • Thermostat in panel • 2-speed high performance pump, 1.5 HP Timer mode-selector for control of filter/heater • 12V **spa light** • Independent air switches • Receptacles provided for 120V deluxe spa-side control and field installable ozone generator • Receptacle for single speed secondary pump • Includes air buttons and tubing
	HDQES6000CU2	ES6000-C-U2	Electromechanical equipment system, complete with pump, blower, and base. Minimal assembly required. *For Topside Controllers and additional cords see parts pages.*
HYDROQUIP			**Electromechanical Spa Control Systems** *For Topside Controllers and additional cords see next page.*
	HDQCS6009US2	CS6009-US2	**CS6000 "SLIDE"** Replacement control with new "SLIDE" technology which allows the heater to be mounted in a variety of positions. Ideal for retrofits. Unit is 120V/240V convertible (1.375/5.5kw heater) and has mini J&J receptacles for a two speed main pump, one speed secondary pump, blower & ozone. Includes 12V light, cord set, air buttons, and tubing. Topside ready.
✻	HDQ370031SM	37-0031-SM	Light Kit 120V less wall fitting

All items cataloged are normally stocked unless noted.

Not Stocked ✻ While Supplies Last

Code	New Product Number	Old Product Number	Description

HYDROQUIP

VS Series Retrofit Control Kits

Why choose Hydroquip?

Make no mistake, the VS series retrofit kits *ARE* Balboa controls. In coordination with Balboa, Hydroquip has developed a line of controls functionally identical to the original Balboa VS series. Then they set out to make improvements.

Improvements?

Yes! HydroQuip took Balboa PC boards, topsides, sensors, etc., and put them in a metal HydroQuip enclosure. Then they offered the VS511 and VS520 units as retrofit kits (Balboa doesn't).

HydroQuip offers VS kits in numerous forms, from the stock Water Pro line (which matches the existing Balboa VS design) to kits with "SLIDE" moveable heaters in both flow-thru and "L" shapes. They can even be ordered with remote heaters. But that's not the best part.

THE BEST NEWS IS THE WARRANTY! Balboa's warranty is 1 year from date of manufacture. HydroQuip's warranty is ***two years*** from date of manufacture.

Model	Description
VS500Z	For spas with one 2 speed jet pump.^
VS501Z	For spas with one 2 speed jet pump and either a single speed secondary jet pump or an air blower.^
VS510SZ	For spas with one 2 speed jet pump and a single speed secondary jet pump, plus an air blower.^
VS511Z	For spas with two 2 speed jet pumps.^
VS520SZ	For spas with two 2 speed jet pumps and an air blower or a single speed third jet pump.^
	^ If a circ pump is used with any of these systems, jet pump 1 can be single speed if desired.

	HDQCS6100BUWP	CS6100B-U-WP	HydroQuip VS500Z system with mini-oval topside
	HDQCS6200BUWP	CS6200B-U-WP	HydroQuip VS501Z system with mini-oval topside
	HDQCS6200BUFWP	CS6200B-U-F-WP	HydroQuip VS501Z system with lite duplex (mid-size) topside
	HDQCS6230BUZWP	CS6230B-UZ-WP	HydroQuip VS510SZ system with serial standard (large) topside
CALL	HDQCS6220BUWP	CS6220B-U-WP	HydroQuip VS511Z system with lite duplex (mini-oval) topside
CALL	HDQCS6330BUZWP	CS6330B-UZ-WP	HydroQuip VS520SZ system with serial standard (large) topside

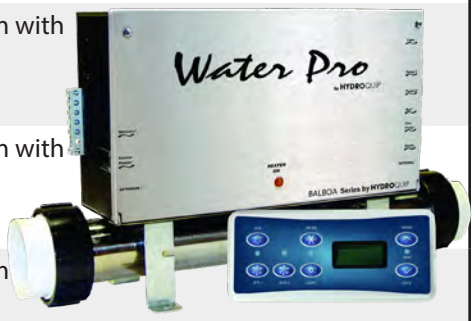

Code	New Product Number	Old Product Number	Description
			NEO 2100 Spa Control System
CALL	WWP777WW99053	777-WW99053	**NEO 2100 Control Kit:** Controls two 2-Speed Pumps, Blower, and 5.5 KW Heater. Includes NEO 2100 Topside Panel & Retrofit Kit. • Stocked in Perrysburg only • External equipment and topside panel connections • Toggle terminal connection • Electronic Thermal Sensing • Equipment converts 240v to 120v • Wi-Fi & Bluetooth option • Features 1.8" color LCD display • Panel back light with white LED or optional RGB LED • Accepts NEO 2100, NEO 1100or NEO 1000 topside panels • AUX ready • Real-time clock
			GECKO Electronic Spa Module
	AQPGKBDLTSC19PPD	PPTS2	**Top Side Controller (K-19)** 7" x 3¼" Size
	AQPGKBDLTSC18PPD	PPTS	**Top Side Controller (K-18)** 5" x 2½" Size
	HDQ340178A	800320-3	D Tec 2.0 PSI Pressure Switch
	ALI5606019	5-60-6019	Gecko temperature sensor
	AQPGK9920100317	5-60-7265	Gecko hi-limit sensor (flat rubber design) • For S-Class Packs
	ALI4307001	4-30-7001	Gecko thru-wall sensor mount

PPTS2

PPTS

All items cataloged are normally stocked unless noted.

Not Stocked ✻ While Supplies Last

Spa Fittings

Code	New Product Number	Old Product Number	Description
	CMP23300210000	10-3100	1¼" Standard Wall Fitting with Eyeball
	BWG303801WHT	30-3801	1¼" Standard Fitting Only
	CMP23300250000	10-3300	2½" Ext. Standard Wall Fitting with Eyeball
	AQP303803WHT	30-3803	2½" Ext. Standard Fitting Only
	CMP25098000000	10-2100	1" Air Control (CMP# 25098-000-000)
❋	BWG102350	10-2350	1" Silent Air Control with button
	AQPHA102200	10-2200	½" Air Control
	WWP6603300	660-3300	Waterway ½" Air Control
	BWG102310WHT	10-2310	1" Slimline Air Control
	AQPHA104400	10-4400	Hydro Jet Extender
	CMP25245000000	25245-000-000	Strip Style Spa Skimmer 1½" S - White
	WWP6406607	640-6607	Royal Spa Skimmer - Gray
	WWP5101500	510-1500	Front Access Square Spa Skimmer - White -1½" S / 2" Spg
	WWP4002070	400-2070	Garden Hose on/off Valve ¾" slip

10-3100

10-2100

10-4400

All items cataloged are normally stocked unless noted.
Not Stocked ❋ While Supplies Last

Code	New Product Number	Old Product Number	Description
		Spa Jets	
	BWG164821WHT	16-4821	Magna'ssage Rotating Single Port internal 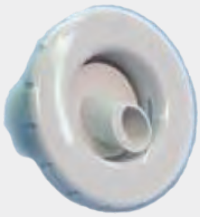 16-4821
✻	BWG165300WHT	16-5300	Hand Held "Shower" Jet for Magna Series 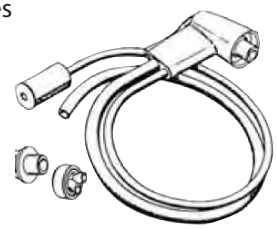 16-5300
✻	BWG104920WHT	10-4920	Directional Eyeball for 10-4940 10-4920
	BWG165250WHT	16-5250	1½" x 1" Micro'ssage Jet 16-5250
	BWG165230WHT	16-5230	Micro'ssage Grill & Flow path Assembly White 16-5230
	CMP23300100000	10-5100	1½" Hydro Jet (CMP# 23300-000-000) 10-5100

All items cataloged are normally stocked unless noted.

Not Stocked ✻ While Supplies Last

Code	New Product Number	Old Product Number	Description
			Waterway — Spa Jet Parts
	WWP2105910	210-5910	Poly Jet Ell Body ⅜" RB Air x ¾" S Water
	WWP2105870	210-5870	Poly Jet Body Assembly ⅜" Smooth Barb x ¾" Smooth Barb
	WWP2105830	210-5830	Poly Jet Body 1" Water x 1" Air
	WWP2105860	210-5860	Poly Jet Tee Body 1" S Air x 1½" S Water w/Top Plug - White
	WWP2106040	210-6040	Standard Poly Jet Adjustable Caged Style - White
	WWP2184000	218-4000	Diffuser for Poly Storm Jets
	WWP2186610	218-6610	Diffuser for Power Storm Jets
	WWP2186930	218-6930	Diffuser for Mini-Storm Jets
	WWP7111750	711-1750	Gasket for All Poly Jet Bodies
			HAYWARD — Hydrotherapy Spa Jet Fittings
	HPPSP1434PAKB	SP1434PAKB	Vari-Flo Nozzle Assembly - Adjustable
	HPPSP1436PAKB	SP1436PAKB	Pulse-Flo Nozzle Assembly - Rotating
			Waterway — Royal Spa Jets
*	WWP2124530	212-4530	Dual Diverter Jet Body
*	WWP2108437	210-8437	Pop-Up Jet/Neck Jet

210-5910

All items cataloged are normally stocked unless noted.
Not Stocked * While Supplies Last

QUALITY POOL SUPPLY

Waterway

Suction Fittings

VGB 2008 Compliant

Ask us about color options!

Code	New Product Number	Old Product Number	Description	Max Flow Rate (gpm)	Flow Rate @1 fps (gpm)
	WWP6403250VP	640-3250VP	White, 3¾" face, 1.5" slip connection, fits 2 3/8" hole	128	TBD
	WWP6423630V	642-3630V	Cover only for 640-3580V		
✻	WWP6423280V	642-3280V	Cover only for 640-3930V		

CMP

Suction Fittings

	New Product Number	Old Product Number	Description	Max Flow Rate (gpm)	Flow Rate @1 fps (gpm)
	CMP25215000000	25215-000	White, 6" face, 2" slip connection, fits 3" hole, nearly exact replica of the HydroAir 10-6201	175	40
	CMP25215000003	25215-000-003	White cover for above, accepted as VGB compliant replacement of the HydroAir 10-6011 cover for the 10-6200 series suction fittings		
	CMP61008083200	61008-083-200	Screws for above		

AquaStar pool products

Suction Fittings

	New Product Number	Old Product Number	Description	Max Flow Rate (gpm)	Flow Rate @1 fps (gpm)
	APP415T101	415T101	Adapter for 4HP101 - use when there is no wall fitting between the spa wall and the adapter. 415T101		
	APPR415T101	R415T101	Adapter for 4HP101 - use when there is a wall fitting between the spa wall and the adapter. 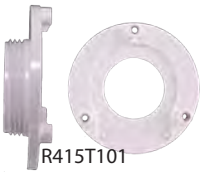 R415T101		
	APP6HPHA101	6HPHA101	White, 6" face, specific replacement of the HydroAir 10-6011 cover for the 10-6200 series suction fittings (no adapter required)	224	35.5
	APP615T101	615T101	Adapter for 6HPHA101		

AquaStar offers a variety of other adapters. If you don't see what you need here, call your nearest Quality Pool Supply branch and we can help you determine if AquaStar has a solution to fit your needs.

All items cataloged are normally stocked unless noted.

Not Stocked ✻ While Supplies Last

Code	New Product Number	Old Product Number	Description
LEN GORDON COMPANY		**Air Switches**	
	ALI923100001	ES-Combo	On/Off Switch (15' Max. tube distance) 120/240V - With #10 Button
	ALI921305001	AS-Multi-Combo	On/Off or 2-Speed double throw 120/240V - With #10 Button
	ALI921805001	AS-TD-Combo	On/Off with 10 Minute Time Delay 120/240V - With #10 Button
LEN GORDON COMPANY		**4-Function Switches** #1 - Off #2 - Jets & Blower #3 - Blower #4 - Jets	
	ALI910100007	FF-1094	120/240, 20 amp. per circuit With #10 Button The FF-1094 series offers on/off control for two pieces of equipment with one air button, from up to 150 feet. The two circuit design operates two electrical devices up to 20 amps, including a two-speed pump.
	ALI910106007	FF-1094TC	120/240V with Time Clock With #10 Button
	ALI924350001	FC-5SS-120	Freeze Control - with adjustable solid state thermostat 120/240V - No Button
LEN GORDON COMPANY		**Air Buttons**	
	ALI950401000	#4	White Button 1 3/16" Hole Size
	MPOLG15WHT	#15	White Classic Touch Button 1 3/8" Hole Size
	ALI951001000	#10	White Smooth Button 1 3/4" Hole Size
LEN GORDON COMPANY		**Air Switch Parts**	
	ALI410243	410243	Relay - AS-2
	ALI8600100	860010-0	Air switch - momentary
	ALI990100000	990100-000	75' Tubing with Coupler
	ALI990310000	990310-000	Coupler
	ALI990300000	990300-000	Tee

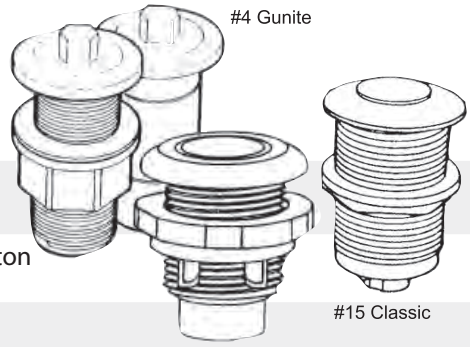

All items cataloged are normally stocked unless noted.
Not Stocked ✻ While Supplies Last

QUALITY POOL SUPPLY

Code	New Product Number	Old Product Number	Description
			Waterway Manifolds
	WWP6727130	672-7130	2" slip x 2" spg manifold, (2) ¾" barbs **Smartplumb**
	WWP6727140	672-7140	2" slip x 2" spg manifold, (4) ¾" barbs **Smartplumb**
	WWP7150040	715-0040	¾" plug for SmartPlumb barbs
	WWP7159860	715-9860	¾" barb plugs, pre-SmartPlumb
	WWP6724200	672-4200	2" slip x 2" spg manifold, (4) ¾" slip outlets
	WWP6724270	672-4270	2" slip x 2" slip manifold, (6) ¾" slip outlets
✻	WWP6724550	672-4550	2" slip x 2" spg or 1½ slip manifold, (6) 1" slip outlets
✻	WWP6724450	672-4450	2" slip x 2" spg manifold, (9) ¾" slip outlets
	WWP6724660	672-4660	1½" slip x 1½" spg manifold, (10) ⅜" barbs (2 rows)
	WWP6720420	672-0420	1½" slip x 1½" spg manifold, (16) ⅜" barbs (2 rows)
	WWP7159870	715-9870	⅜" barb plugs
	WWP4254000	425-4000	1½" x 1½" spg manifold, (6) ⅜" barbs (3/side)
	WWP6724260	672-4260	2" slip x (6) ¾" slip outlets
	WWP4251030	425-1030	½" slip / ¾" spg x ¾" barb adapter
	WWP6724350	672-4350	⅜" barb adapter x ¼" MPT
	WWP4250210	425-0210	⅜" barb adapter x ½" spigot
	WWP4251000	425-1000	¾" barb adapter x ½" spigot
	WWP8722291B	872-2291B	Clamp for ⅜" hose
CALL	WWP8722160B	872-2160B	Clamp for ¾" x 1" Tubing
			Hydro Air Parts
	BWG502108WHT	50-2108	1" Air Control Stem & Cap (white)
	BWG303703WHT	30-3703	Eyeball, Micro Series
	BWG303704WHT	30-3704	Retaining Ring, Micro Series
	BWG303801WHT	30-3801	Standard Wall fitting only 1.5" White
	BWG303805WHT	30-3805	Eyeball Only
	BWG303806WHT	30-3806	Eyeball Retaining Ring Only
	CMP23300200040	30-3804	Gasket
	BWG505838	50-5838	AF Mark II Eyeball Seating Ring
	BWGO016B70	30-016EP70	AF Mark II O-ring (Not Pictured)
✻	BWG305836WHT	30-5836	AF Mark II Clip for Nozzle (Not Pictured)
✻	BWG107825M	10-7825M	Metal Wrench for Standard, Slim Line & Micro

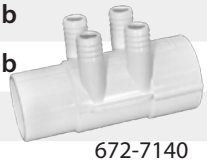
672-7140

672-4550

672-4260

50-2108

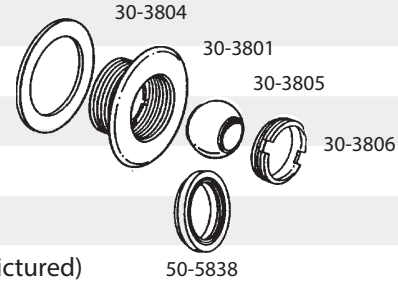

All items cataloged are normally stocked unless noted.

Not Stocked ✻ While Supplies Last

Code	New Product Number	Old Product Number	Description
			Balboa Spa Pack Parts
✻	BWG10328	10328	Replacement overlay, Converts 53189 to pump, blower, light
	BWG10402	10402	Replacement overlay, Converts 53189 to pump 1, pump 2, light
	AQPBB51223	51223	LED Duplex Topside - pump, blower, light
	BWG10352	10352	Replacement overlay - converts 51223 to pump and light only
	HDQ3452487K	52487	LCD Mini-oval topside (South Pacific spas, 54219-Z retrofit kits) - pump, light
	HDQ3452144K	52144	LCD Mini-oval Topside (54220-Z retrofit kits) – pump 1, pump 2/blower, light
	BWG22635	22635	25' Topside extension cable
	AQPBB10226	10226	Balboa panel lamp
✻	BWG5246801	52468	Ozone Generator - 120V and 240V applications
	BWG50096	50096	M-1 Heater assembly 5.5 KW with pressure switch
	HDQ2658083K	58083	M-7 Heater assembly 5.5 KW (with sensors)
	HDQ2658104K	58103	M-7 Heater assembly 4 KW (no sensors)
	BWG54091	54091	M-1 Circuit board
	HDQ3354115K	33-0031	Lite Leader Circuit Board (Balboa #54115)
✻	HDQ3354369K	54369-03	VS500Z Circuit board (replaced with 54357-03)
	HDQ3354357K	54357-03	VS501Z Circuit board
CALL	HDQ3354383K	33-0032C-K	VS511Z Circuit Board (Balboa #54383-04)
	HDQ3430337HQK	30337	Sensor assembly, temperature & hi-limit, pre M-7, 4 pin connector, 96”
	HDQ3453605HQK	53605	Balboa M-7 sensor, 12”
	HDQ390021K	52560	M-7 Sensor mount
	AEQ3029P	3029	Pressure Switch 2.0 PSI (replaces 30408)
	HDQ340199F	21223	Pressure switch wire harness
	AQPBB302741	30274-1	120V transformer with 9 position connector
	BWG302742	30274-2	240V transformer with 9 position connector
	BWG10165	10165	Deluxe Serial Standard Duplex - $6^{3}/8$" x $2^{5}/16$ Opening
	BWG11109	11109	Lite Duplex Adapter Plate - $5^{5}/16$ x $1^{3}/8$ Opening
	BWG11110	11110	Lite Digital Adapter Plate - $3^{1}/2$ x $1^{1}/4$ Opening
	BWG11718	11718	Mini Panel Adapter - $3^{13}/16$" x $^{15}/16$" Opening
	AQP50086	50086	2" Heater split nut (does not include screws)
	AQP50087	50087	Screw for 50086

** Please call for availability.

All items cataloged are normally stocked unless noted.
Not Stocked ✻ While Supplies Last

QUALITY POOL SUPPLY

Code	New Product Number	Old Product Number	Description
		Spa Pack Parts	
		Air, Pressure, and Flow Switches	
	HDQ340002K	TBS-301	Air Switch SPDT Latching 20A
	AQPTDITBS302	TBS-302	Air Switch SPDT Momentary 20A
	HDQ340059K	TBS-317	Air Switch DPDT Latching 20A
	AQPM25	M25	Flo Switch Grid Control 1.5" SXS-25A
	AEQ3029P	3029	Pressure Switch SPNO ⅛ Male 25A
	AEQ3902	3902	Pressure Switch with Adapto[illegible] (Aladdin)
	HDQ340178K	3902TM	Same as above without Adaptors (Tecmark)
	AEQ3925	3925	Pressure Switch 1-5 PSI 25 Amp w/adapters
	ALI8001223	800122-3	Len Gordon Pressure Switch 25A
		Relays and Contactors	
	HDQ350028K	DPC-240	DPST Contactor 40/50 AMP (240V Coil)
	HDQ350012	DPC-120	DPST Contactor 40 AMP (120V Coil)
	HDQAZ22801C120A	AZ2280-1C-120A	Relay 120V Coil T91 SPDT
	HDQ350036K	5-00-0053	Relay 120V Coil T92 DPDT
✻	AQPS86R11120	S86R11-120	Relay - 20 AMP 120V DPDT
✻	HWP351043	S86R11-240	Relay - 20 AMP 240V DPDT

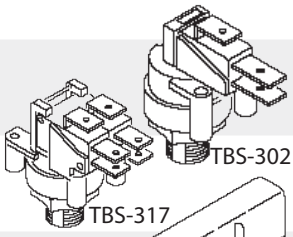
TBS-302
TBS-317

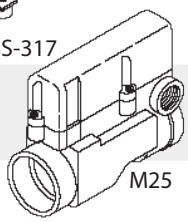
M25

3902

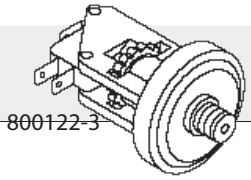
800122-3

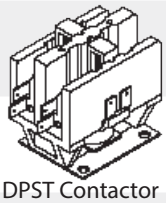
DPST Contactor

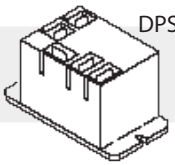
AZ2280-1C-120A

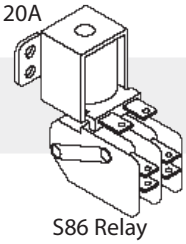
S86 Relay

All items cataloged are normally stocked unless noted.

Not Stocked ✻ While Supplies Last

Code	New Product Number	Old Product Number	Description
		Spa Pack Parts	
		Heating Elements, Housings, and Assemblies	
	JOD7020056	70-20056	5.5 KW Coiled heater element (fits low flow canister heaters)
	ALI299001	12-0001P	Heater Element 1.5/6 KW, 5" x 5" flange
	HDQ120110GK	25-3053	5.5 KW Flo-thru heater element, 7" length
	HDQ120100K	6-FLO ◊	5.5 KW Flo-thru heater element
	HDQ120102K	20-3440 ◊	4 KW Flo-thru heater element (Works with Gecko Propack) ◊*Buy 6 and get 10% off; Buy 12+ and get 15% off; Buy 24+ and get 20% off.*
✻	MPO612	6-1-2	5.5KW heater element, 1" thread, 2 thermowells
✻	MPO1512	1.5-1-2	1.5KW heater element with 2 bulb wells. 12OV
	HPPCZXELE7623	CZXELE7623	5.5KW heater element, 1" thread, 8.25" L
✻	MPO453001	45-3001	Adapter, converts 6-1.25-2 to replace Vulcan (large flange) elements
	HDQ481540RP	48-1540-RP	4 KW Universal Heater (replaces 2-00-5003)
	ALI380146	38-0146	Heater Housing EM-201/203/103
	AQPAPCO2407	O-171	Heater O-Ring (fits 38-0146)
	WWP7114030	711-4030	2" Heater gasket, flo-thru heater tube
	WWP7114050	711-4050	1 1/2" Heater gasket, flo-thru heater tube
	WWP7114000	711-4000	Flat heater union gasket, 1½"
	WWP7114020	711-4020	Flat heater union gasket, ¼" thick, 2"

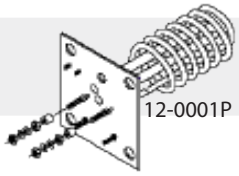
12-0001P

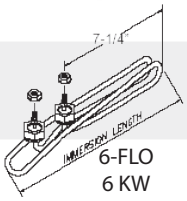

6-FLO
6 KW

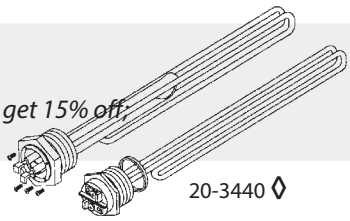
20-3440 ◊

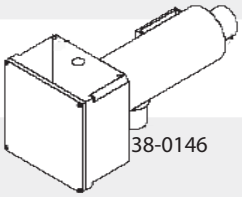
38-0146

All items cataloged are normally stocked unless noted.
Not Stocked ✻ While Supplies Last

Code	New Product Number	Old Product Number	Description
		Spa Pack Parts	
		Time Clocks	
	AQPTA4071	TA4071	Timer - 24 hr. SPST, 120V
	ALI3400020	TA4066	Diehl 7 day SPST time clock, 240V
	HDQ340033	34-0033	Timer - Grasslin - 24 hr. SPDT, 120V
	ALI3400005	PB913N	Intermatic 24 hr. SPST timer 120V (used in older Cal Spas, Hercules, etc.)
		Thermostats and Hi-Limit Switches	
	HDQ340058	HL9845	Hi-Limit Switch 2 Pole (Thermo Disc)
	HOS275266300	275-2663-00	High Limit 36" Capillary tube
	HOS275312400	275-3124-00	Thermostat, 36" capillary
	HDQ340081	34-0081	Tecmark Solid State 120V Thermostat (ETS1000-120040LP)
		Cords	
	ALI5500061	5-50-0061	15' Power Cord for 120V
	HDQ300061B	FP100GFI	15 ' Power Cord, 120V with 15AMP GFCI
	ALI5500080	5-50-0080	1 speed pump or booster pump cord 14/3 x 48" Red AMP Plug
	ALI5500065	5-50-0065	2 speed pump 115/230V 14/4 x 42" Red AMP Plug
	ALI5500066	5-50-0066	Blower cord 14/3 x 36" White AMP plug
	ALI5500175	5-50-0175	Ozone cord - 4 Position 16/3 x 36" Blue AMP Plug
	HDQ30024048	30-0240-48	1 speed pump cord 14/3 x 48" mini - J&J plug
	HDQ30018048	30-0180-48	Ozone cord 18/3 x 48" mini - J&J plug

TA Series Timer

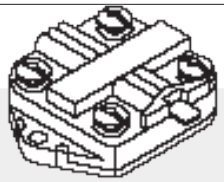
HL9845

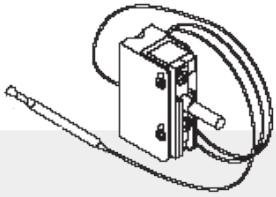
275 Series Hi-Limit

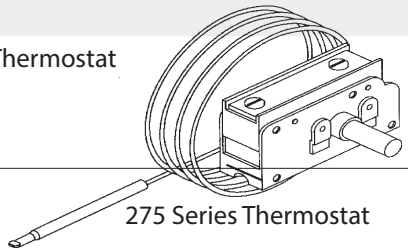
275 Series Thermostat

All items cataloged are normally stocked unless noted.

Not Stocked ✻ While Supplies Last

Code	New Product Number	Old Product Number	Description
		Spa Pack Parts	
		Electrical and Miscellaneous Components	
	AQPLG90180000PKG	990180-000PKG	Drywell - Plastic ½" MPT
	AQPHR120	HR1-20	Circuit Breaker 20 AMP (Thermal)
	HWP301002	6590GFCI	GFCI 20AMP Blank Front (120V)
✻	HOS5300004	5-30-0004	Indicator Light (120/240V)
	AQPPATMTG311A	3-30-0002	Four Function Switch (P.A.T. MTG311A, Green Cam)
	HOS5400003	5-40-0003	Toggle Switch, On/Off
	ALI5400006	5-40-0006	Toggle Switch for EM-190 Tritimer
	HDQ340020	5-40-0010	SPDT rocker toggle switch, 15 amp
	ALI350001	1-480703	Plug Female AMP 4 Pin
✻	ALI340301	350550-1	(Pins) Female AMP Plugs
	ALI1480702	1-480702	Plug Male AMP 4 Pin
✻	ALI340300	350547-1	(Pins) Male AMP Plug
	HDQ350081	30122	Fuse, MDA style, 10 amp
	BWG30123	30123	Fuse, MDA style, 20 amp
	HDQ340035	HKP-HH	Fuse holder, MDA style
✻	BWG30128	30128	Fuse block, MDA style
✻	AQPSBSC20	SC-20	Fuse, SC style, 20 amp
	AQPSBSC25	SC-25	Fuse, SC style, 25 amp
	AQPSBSC30	SC-30	Fuse, SC style, 30 amp
	ALI5100011	HPF-FF	Fuse holder, SC style, 25-30 amp
	HDQ340026	30138	Fuse block, SC style, 25-30 amp

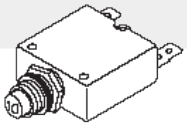
HR1-20

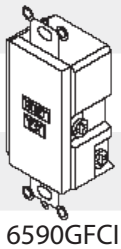
6590GFCI

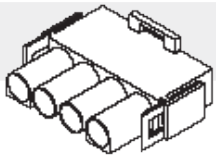
1-480702

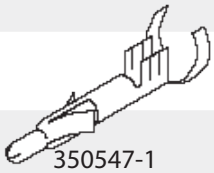
350547-1

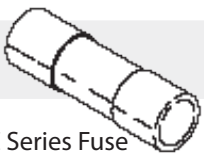
SC Series Fuse

All items cataloged are normally stocked unless noted.
Not Stocked ✻ While Supplies Last

Code	New Product Number	Old Product Number	Description
		Topside Controllers	
	ALI930630516	AQUA2	Len Gordon Controller with 2 buttons - 10' cord 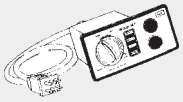
CALL	ALI930750516	AQUA4	Len Gordon Controller with 4 buttons - 10' cord
	HDQ340039AS	CC3-120	Tecmark 3 Button Topside - no digital display - 120V
	HDQ340039DS	CC3D-120	Tecmark 3 Button Topside with digital display - 120V
CALL	HDQ340037AS	CC4-120	Tecmark 4 Button Topside - no digital display - 120V
CALL	AQPTDI4D24010I00	CC4D-240	Tecmark 4 Button Topside with digital display - 240V
	ALI990126516	990126-516	Aquaset Diaphragm Kit
		Control Parts **Brett Aqualine & Catalina**	
	ALI990160000	990160-000	20'Water Temperature Sensor (strap-on style)(WTS020)
	ALI82580D0	82580D-0	PC Board for RC4, RC34 and BL-40 34-5023A
*	ALI380400A	38-0400A	Temperature Sensor for BL-40 Digital

All items cataloged are normally stocked unless noted.

Not Stocked * While Supplies Last

Code	New Product Number	Old Product Number	Description
		Spa Lights	
✻	ORYP0010	P0010	Aquastar Body
✻	ORYP0080	P0080	Reflector - Aquastar & Hydrostar
		Spa Light Accessories	
	WWP630K005	630-K005	Waterway Jumbo 5" lens assembly *(body, gasket, nut, reflector, red & blue lenses)*
	WWP6305005	630-5005	Standard Spa light kit (body, nut, gasket, reflector, red and blue lens covers)
	WWP6306005	630-6005	Same as above with removable front access lens
	WWP2154350	215-4350	Standard body
	WWP2154380	215-4380	Front access body (removable lens not included)
	WWP2154360	215-4360	Front access removable lens
	WWP7184100	718-4100	Nut
	WWP6114390	611-4390	Reflector
	WWP8050132	805-0132	Front access lens o-ring
	WWP6300100	630-0100	Front access wrench
	WWP6114303	611-4303	Blue lens cover
	WWP6114304	611-4304	Red lens cover
		Electric Spa Heater Parts	
	COA20005061	20005061	Element 5, 500W, 240V screw-in type
	COA21000650	21000650	Contactor, 2P, 35AMP, 220V
	COA22002001	22002001	Temperature Control, single stage
✻	COA29034610	29034610	Pilot Light ½" 250V

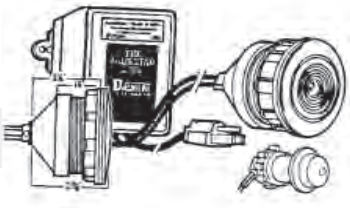

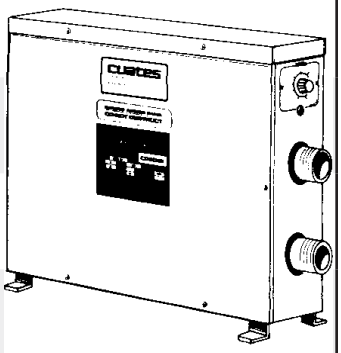

All items cataloged are normally stocked unless noted.
Not Stocked ✻ While Supplies Last

NOTES

INDEX

Above Ground Pool Lighting 416
Accessories 418
Hayward Lighting 415
Jandy Lighting 408
PAL Lighting 414
Pentair Lighting 410
Skimmer LED Lights 417
S.R. Smith Lighting 416

QUALITY POOL SUPPLY

WaterColors Nicheless LED Lights

- The Jandy Pro Series WaterColors Nicheless LED lights with HydroCool™ technology use an innovative, energy-efficient design that harnesses the cooling power of water to create a cooler running, longer lasting light.
- Bright illumination that reduces energy costs using less wattage than ever before.
- Triple-material, unibody construction design eliminates common leakage failure points.
- The diffuser lens provides better blending of light for the clearest and most consistent lighting in its class.

Code	New Product Number	Old Product Number	Description
	JNDJLU4C12W50S	JLU4C12W50S	Pro Series LED Underwater Light, RGBW S - Series 12W 50' Cord
	JNDJLU4C12W100P	JLU4C12W100P	Pro Series LED Underwater Light, RGBW P - Series 12W 100' Cord
	JNDJLU4C24W100P	JLU4C24W100P	Pro Series LED Underwater Light, RGBW P - Series 24W 100' Cord
	JNDJLU4C24W150P	JLU4C24W150P	Pro Series LED Underwater Light, RGBW P - Series 6W 150' Cord
	JNDJLU4C24W100S	JLU4C24W100S	Pro Series LED Underwater Light, RGBW S - Series 24W 100' Cord
CALL	JNDJLU4C24W150	JLU4C24W150	Jandy Pro Series LED Underwater Light, RGBW Watercolors 24W 150' Cord (Stocked in Waterford Only)
	JNDJLU4C24W150S	JLU4C24W150S	Pro Series LED Underwater Light, RGBW S - Series 24W 100' Cord
	JNDJLU4C6W150P	JLU4C6W150P	Pro Series LED Underwater Light, RGBW P - Series 6W 150' Cord
	JNDJLU4C24W100	JLU4C24W100	Jandy Pro Series LED Underwater Light, RGBW Watercolors 24W 100' Cord (Stocked in Dublin only)

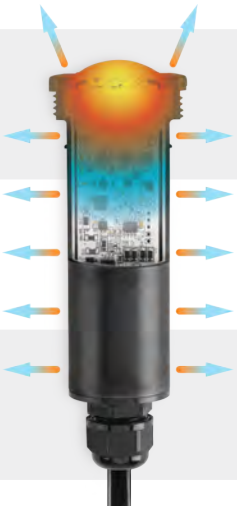

All items cataloged are normally stocked unless noted.

Not Stocked ✻ While Supplies Last

Code	New Product Number	Old Product Number	Description
			Pool and Spa Lighting
CALL	JNDCPLVRGBWP100	CPLVRGBWP100	Jandy Large RGBW LED Light 12v, Plastic Ring 100' Cord (Stocked in Clio Only)
✻	JNDCPHVRGBWS150	CPHVRGBWS150	Large RGBW LED Light, 120V Stainless Steel Face Ring, 150' Cord
✻	JNDCSHVLEDS100	CSHVLEDS100	Pro Series Color LED Light, Small, 120V, SS, 100' Cord
✻	JNDCSHVLEDS150	CSHVLEDS150	Pro Series Color LED Light, Small, 120V, SS, 150' Cord
✻	JNDCSHVLEDS50	CSHVLEDS50	Pro Series Color LED Light, Small, 120V, SS, 50'
✻	JNDWSHV100WS100	WSHV100WS100	Pro Series Small White Light, 120V, 100W SS, 100' Cord
✻	JNDSSNICSM1R	SSNICSM1R	Pro Series Stainless Steel ProNiche, Small, 1" Rear Outlet, Gunite
✻	JNDSSNICSM1S	SSNICSM1S	Pro Series Stainless Steel ProNiche, Small, 1" Side Outlet, Gunite
✻	ZODBUDDYLITEW150	BUDDY-LITE-W-150	Buddy Light White, 12V Dimmable - 150' Cord
			Lighted Waterfalls Complete Full Color LED Water Fall Kit. Unique combination of water, light, and sound. Use as a stand-alone feature or combine with SAVI Lighting Systems
✻	ZODOAWF24XMS100	OAWF-24-XMS-100	X-Stream Nova Fall, 24" - 100' Cord
✻	ZODOAWF36XMS100	OAWF-36-XMS-100	X-Stream Nova Fall, 36" - 100' Cord

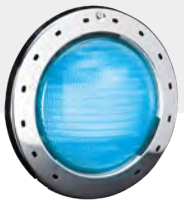

All items cataloged are normally stocked unless noted.

Not Stocked ✻ While Supplies Last

QUALITY POOL SUPPLY

Code	New Product Number	Old Product Number	Description

MicroBrite® (color and white LED lights)

- Brilliant LED excitement in a small package The brightest ultra-compact light available Premium LED illumination and vibrant colors from a light just 3.5 inches long
- Installation in water as shallow as four inches
- Versatile upgrade for fiber-optic lighting
- Suitable for retrofit into many pools with older fiber-optic systems
- Fits where others don't: Fits into narrow walls and tight spaces for ultimate design and lighting flexibility
- Energy-saving, money-saving LED efficiency from the industry's most compact 12V LED plastic light
- Installs in any standard 1.5-inch pool wall fitting
- Fast and simple for professional installation
- No niche required

	PEN620424	620424	12V Color 50' Cord Light
	PEN620425	620425	12V Color 100' Cord Light
	PEN620426	620426	12V Color 150' Cord Light
	PEN620428	620428	12V White 50' Foot Cord Light
	PEN620429	620429	12V White 100' Foot Cord Light
	PEN620430	620430	12V White 150' Foot Cord Light

GloBrite® (color and white LED lights)

- 5 brilliant fixed colors, 7 dazzling pre-programmed light shows
- The perfect complement to IntelliBrite® 5g LED Pool Lighting for dynamic, synchronized colored light shows
- Compatible with IntelliTouch® and EasyTouch® control systems for advanced control features
- Can be used with optional IntelliBrite Controller
- Does not require grounding or bonding for quick and easy installations
- UL approved
- Shallow Water LED Lights

	PEN620081	620081	Vinyl Combo #2: 2 GloBrite Color Light with 100' cord, 300W Transformer, 2 Vinyl Niches
	PEN602055	602055	GloBrite 12 V 100' Cord Light
	PEN602056	602056	GloBrite 12 V 150' Cord Light
	PEN620039	620039	Vinyl Niche for GloBrite with white, blue, black, tan, and grey rings
	PEN620051	620051	Fiberglass Combo #1: GloBrite Color Light with 100' cord, 300W Transformer, Fiberglass Niche
	PEN620041	620041	Fiberglass Niche for GloBrite - white ring
	PEN619994	619994	Gunite Combo #2: 2 GloBrite Color Light with 100' cord, 300W Transformer, 2 Gunite Niches
	PEN620040	620040	Gunite Niche for GloBrite with white, blue, black, tan,and grey rings
	PEN602104	602104	GloBrite White LED Light 12V 100' cord
	PEN602108	602108	GloBrite White LED Vinyl Combo:(2) GloBrite White Lights with 100' cords, (1) 300W Transformer, and (2) Vinyl Niches
	PEN580036	580036	ColorVision Bubbler - Vinyl/Fiberglass (Globrite light sold separately/required)
	PEN580037	580037	ColorVision Bubbler - Gunite (Globrite light sold separately/required)

All items cataloged are normally stocked unless noted.
Not Stocked ✻ While Supplies Last

Please see page 396 for transformers and junction boxes.

Code	New Product Number	Old Product Number	Description
PENTAIR eco select TRADE GRADE		**IntelliBrite** LED Lights for Swimming Pools & Spas • Set one of 5 predetermined fixed colors or select from blue, green, magenta, white, and red • 7 popular "color shows" that come pre-programmed • Designed to work with IntelliTouch® and EasyTouch®	
	PEN601011	601011	5G Color **Pool** Light 12V with 50' cord
	PEN601001	601001	5G Color **Pool** Light 120V with 50' cord
	PEN601002	601002	5G Color **Pool** Light 120V with 100' cord
	PEN640121	640121	5G Color **Spa** Light 120V with 50' cord
	PEN640120	640120	Color **Spa** Light 120V with 30' cord
	PEN618031	618031	Color Sync™ Controller for Pentair Color LED Pool Lights
	PEN601300	601300	White Light 5G 120V with 30' cord
	PEN601301	601301	White Light 5G 120V with 50' cord
PENTAIR		**Pool Light Niches**	
		Niche - *Stainless Steel*	
	PEN78232500	78232500	For vinyl or fiberglass with 1" hub
	PEN78232400	78232400	For vinyl or fiberglass with ¾" hub
	PEN78210400	78210400	For concrete with ¾" hub
	PEN78210600	78210600	For concrete with 1" Rear hub
		Niche - *Plastic*	
	PEN62000400	62000400	For vinyl with 1" or ¾" socket weld hub "Quick Niche" type
	PEN79206700	79206700	For concrete with 1" or ¾" socket weld hub
		Spa Light Niches	
	PEN78242200	78242200	For vinyl or fiberglass with ¾" hub
	PEN78244200	78244200	For concrete with ¾" hub

All items cataloged are normally stocked unless noted.
Not Stocked ✻ While Supplies Last

QUALITY POOL SUPPLY

Code	New Product Number	Old Product Number	Description
PENTAIR TRADE GRADE		**Amerlite™ UL**	**Large Incandescent Light for Pools** Features a stainless steel face ring and low water cut-off. Snap-on red and blue lenses are optional - See below. *Note: 30' Lights have been discontinued.*
	PEN78451100	78451100	500 Watt 120V 15' Cord
	PEN78458100	78458100	500 Watt 120V 50' Cord
	PEN78456300	78456300	500 Watt 120V 100' Cord
	PEN78431100	78431100	300 Watt 12V 15' Cord
		Niche - *Stainless Steel*	
	PEN78232500	78232500	For vinyl or fiberglass with 1" hub
	PEN78232400	78232400	For vinyl or fiberglass with ¾" hub
	PEN78210400	78210400	For concrete with ¾" hub
		Niche - *Plastic*	
	PEN62000400	62000400	For vinyl with 1" or ¾" socket weld hub "Quick Niche" type
	PEN79206700	79206700	For concrete with 1" or ¾" socket weld hub
		Snap-on Lenses	
	PEN78900900	78900900	**Red** "Snap-on" Lens
	PEN78900800	78900800	**Blue** "Snap-on" Lens
PENTAIR		**Aqua-Lumin III™ UL**	**"Nicheless" Quartz Halogen Light** • Only requires a 3" (inlet size) hole through the pool wall. • Built-in heat sensing low-water cutoff device. • Snap-on red & blue lenses are optional - see above
		Light (15 and 30 foot cords have been discontinued)	
	PEN78864200	78864200	250 Watt 120V 50' Cord (was part # 78863400)
		Mounting Fixture	
	PEN78887800	78887800	For Vinyl Liner with 1" hub.
	PEN78887700	78887700	For Vinyl Liner with ¾" hub.
	PEN619547	619547	Aqua-Lumin II to III retrofit bracket

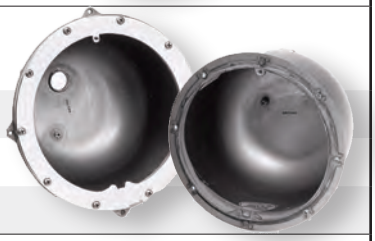

All items cataloged are normally stocked unless noted.

Not Stocked ✻ While Supplies Last

Code	New Product Number	Old Product Number	Description		
			Aqua-Light™ **Quartz Halogen Light for Pools & Spas** Features stainless steel face ring, low water cut-off		
	PEN77111100	77111100	100 Watt	120V	15' Cord (for spas)
	PEN77161100	77161100	250 Watt	120V	15' Cord
	PEN77168100	77168100	250 Watt	120V	50' Cord
	PEN77360300	77360300	250 Watt	120V	100' Cord
			Niches		
	PEN78242200	78242200	For **vinyl** or **fiberglass** with 3/4" hub		
	PEN78244200	78244200	For **concrete** with 3/4" hub		
			Spa Brite® UL **Commercial Spa Light** Features a stainless steel face ring & low water cut-off. Optional colored snap on lenses. (15' and 30' cord lengths are no longer available)		
	PEN78108200	78108200	100 Watt	12V	50' Cord
	PEN78106100	78106100	100 Watt	120V	50' Cord
			Niches		
	PEN78242200	78242200	For **vinyl** or **fiberglass** with ¾" hub		
	PEN78244200	78244200	For **concrete** with ¾" hub		

QUALITY POOL SUPPLY

Code	New Product Number	Old Product Number	Description
			PAL LED Lighting
			PAL Commander - 2-Wire System
	PALPC2D35	57-330-1605	PAL Commander Receiver/Driver 2 wire, 35 va, 12vdc, with handheld remote, up to 6 lights
	PALEGTMXPAL80	56-330-2306	Treo Max 2-Wire RGB Nicheless, 80'
	PALPCT3T	PCT-3	Hand held remote with wall holder and batteries
	PALEGTMXPAL150	56-330-2304	Treo Max 2-Wire RGB Nicheless, 150'
			PAL Treo Max Color Touch - 4-Wire System
	PALPCR2Z65	57-330-1360	PAL 65W Multi Color Duo Zone Remote Control Transformer 24VDC
	PALEGTMX80	PAL-2T4	PAL Treo Max Multi Color Switch Mode Nicheless Pool/Spa Light, 80' Cable
	PALEGTMX150	PAL-2T4-150	PAL Treo Max Multi Color Switch Mode Nicheless Pool/Spa Light, 150' Cable
			Accessories
		PAL-TCA	PAL lights conduit adapter
	PALVAU	PAL-VA	PAL vinyl liner adapter
✻	HOSPCTWF1	PCTWF1	Wi-Fi Model Kit for PCR-4U
	HOSPCTWF5	PCTWF5	Wi-Fi Model Kit 57-330-1630
	PALPCTWF03	64-PCTWF03	Wi-Fi Module for 1Z/2Z & 3D Series Transformers

All items cataloged are normally stocked unless noted.

Not Stocked ✻ While Supplies Last

Code	New Product Number	Old Product Number	Description
			Universal ColorLogic LED Light • Includes both smooth white and silver luster trim rings. • 10 fixed color and 7 color changing shows • Install in as little as 4" below waterline
	HPPLPCUS11050	LPCUS11050	12V 50' Cord - Works with standard niche
			ColorLogic LED Light • Stainless Steel Face Ring - 15 preset programs • 5 fixed colors and 7 color-changing shows • Color Synchronization *A transformer is required for 12V Lights.*
	HPPSP0527SLED50	SP0527SLED50	120V 50' Cord - Version 4.0 (Inground)
	HPPSP0527SLED100	SP0527SLED100	120V 100' Cord - Version 4.0 (Inground)
	HPPSP0607U	SP0607U	PVC Niche for vinyl or fiberglass - 1" or ¾" conduit (Pool)
	HPPSP0600U	SP0600U	PVC Niche for concrete - 1" or ¾" conduit (Pool)
	HPPSP0583L50	SP0583L50	120V 50' Cord - 500W 4.5 Astrolite (Stocked in Akron only)
	HPPSP0581S15	SP0581S15	12V 15' Cord 300W Astrolite
	HPPSP0535SLED50	SP0535SLED50	120V 50' Cord - ColorLogic 4.5 Spa Light
			ColorLogic Accent Lighting • 10 fixed colors and 7 color changing shows • Low Profile • Total color coordination
	HPPLACUS11100	LACUS11100	ColorLogic 320 1.5" LED Accent Light w/100' Cord
	HPPLACUS11050	LACUS11050	ColorLogic 320 1.5" LED Accent Light w/50' Cord
	HPPSP0536AF	SP0536AF	Accent Light Gunite Wall Fitting - White
	HPPSP0538AF	SP0538AF	Accent Light Vinyl Liner Wall Fitting - White
	HPPLTBUY11300	LTBUY11300	Wall-Mount Transformer - 300W Can be used with all Accent lighting and part# LPCUS11050

QUALITY POOL SUPPLY

Code	New Product Number	Old Product Number	Description
			LED Pool Lighting
CALL	SSR3MLPLXPL60	3ML-PLX-PL60	Mod Light Combo (3 Light) RGB LED Lights 80' Cord w/PLX-PW60 60W Transformer w/ Wireless Remote). 12 VAC, 7 W LED Light for Gunite, Vinyl and Fiberglass. Low Profile Wireless Lamp, 6 Colors (White, Red, Green, Amber, Blue, Magenta). 5 Colored Trim Plates in 2 different shapes (Square and Round) for a total of 10 Options. 3 Year Warranty (Stocked in Clio Only)
	SSRFLEDCTR	FLED-C-TR	**Underwater Color Light Assembly Only** (**5W, 12VAC**) 100k hr. LED array w/ 2 color changing and 6 lockable color modes. Self synchronizing w/ other Treo & 2010 Light Streams water features equipped with CLS-2 LED driver - 80' cord attached which fits most 1.5" wall fittings. Includes white, black, grey, and tan trim rings. Must use with appropriate 12V magnetic transformer. (included with WIRTRAN and PLX-PL60)
	SSRpLXPL60	PLX-PL60	**Pool Lux Plus 60W system with Wireless Remote** Extended Range (100' Line of Sight) wireless remote, Terminal strip Wiring, w/ Oversized wiring space. 2 Year Warranty
✻	SSRWIRTRAN	WIRTRAN	**Wireless Light Control** - Simple, inexpensive control and power sourcebfor FLED Color LED pool lights and Light Streams water features.
	SSRFLEDLAUC	FLED-LAU-C	Color LED lamp for FLED lights
			Above Ground Pool Light
	PEN98600000	98600000	**Aqua-Luminator 2010** Inlet and Light A combination **inlet** fitting and **light**. This quartz halogen low voltage light fits into a standard inlet opening on the pool wall. Includes transformer, switch, two color lenses, and a 25' cord. **Not for wood wall pools.**
			Above Ground Pool Light
	HPPSP056525	SP056525A	Elite Quartz Halogen Flood Light 120/12 Volt 50 Watts 25' cord
			Accessories
✻	SPQNLK3	NLK3	50W Ultra NiteLighter Bulb Replacement Kit, Rectangular Lense

All items cataloged are normally stocked unless noted.

Not Stocked ✻ While Supplies Last

Code	New Product Number	Old Product Number	Description
			Champlain Plastics — Above Ground Skimmer Light
	CPIACM197C	ACM-197C	**Decorative Skimmer Cover Plate** • Ultra bright multi-colored LED light with remote. • 25' cable, transformer and grommets • Fits all above ground wide mouth skimmers
			Ocean Blue Water Products — Above Ground Thru-Wall Light
✻	OBP980015	OB980015	LED light with 3 colored lenses. Installs into pool return fitting 110V - 25' Cord
			HAYWARD — Replacement LED Lamps
	HPPBPCUS11120	BPCUS11120	**Hayward Colorlogic Color Pool Lamp** 120V, Expert Line
	HPPBPWUS11120	BPWUS11120	**Hayward CrystaLogic Bulb** 120V
			J&J Electronics — A Halco Lighting Technologies Company — LED Pool and Spa Lighting
	JJE27041	LSL24-1	**Color Glo Raydiance** 24 LED
	JJELPLP2RGB120	LPL-P2-RGB-120	**LXG Color Pool light** 120V, 3-year warranty,7 light shows, 5 solid covers

All items cataloged are normally stocked unless noted.

Not Stocked ✻ While Supplies Last

Code	New Product Number	Old Product Number	Description
			Accessories
	ITMPJBX52100	PJBX52100	**COMBOConnect® Junction Box Transformer** Combines Standard Junction Box with built in 100W Transformer. 2 High-Voltage and 5 Low-Voltage openings. Mounts via wall, post or rod. *Stocked In Byron Center Only 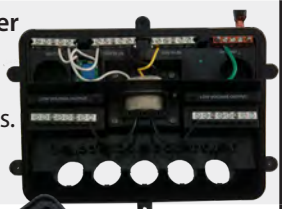
	ITMPJB4175	PJB4175	**Plastic Pool/Spa Light Junction Box Four Lights** - for Conduit up to 1"
	PEN78310600	78310600	¾" **Junction Box** - Black lexan cover, brass base, with three threaded outlets. 3 light systems
	PEN78310700	78310700	**1" Junction Box** - Same as above
	CMP25549500000	25549-500-000	**Inground Light Retrofit Adapter** - Stainless Steel. Ring splits in half to go around light wiring. Ring also includes a grounding screw.
	AEQ500C	500C	**Inground Light Retrofit Adapter** - Chrome plated Brass. Permits use of Amerlite™ in any niche with a diameter from 9¾" - 12" (American, Purex, Hayward)
	AEQ500P	500P	**Adapter Ring** - Same as above except plastic
	PEN619963	619963	GloBrite Transformer 300W (12-14V) Pool Rated
	ITMPX100	PX100	**12 and 13 Volt Magnetic Transformer** - 100 Watts
	ITMPX300	PX300	**12, 13, and 14 Volt Magnetic Transformer** - 300 Watts Specifically designed and UL Listed to provide a safe, isolated 12V to swimming pool lights, submersible fixtures and outdoor lighting.
	GPTQCS1	Q-CS1	**Cord Stopper** - Light Niche Sealer - ¾" Retrofit
	GPTQCS2	Q-CS2	**Cord Stopper** - Light Niche Sealer - 1" Retrofit
	AQBABP1000	ABP-1000	**Aquabond Encapsulating Potting Compound** 50ml - UL Listed for pool, fountain and light fixtures
	CMP25549600000	LW	**Light Wedge** - Holds pool light in niche when niche tab is stripped or broken. 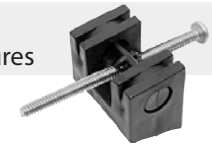

All items cataloged are normally stocked unless noted.

Not Stocked ✻ While Supplies Last

Please see the Safety section for bonding hardware.

Code	New Product Number	Old Product Number	Description
			Aqua-Light™ Parts
	PEN79107800	79107800	1 Clear Lens, 4" Tempered
	HAL127024	100W-MC	2 100W, 120V quartz lamp (mini-can)
	HAL127032	250W-MC	2 250W, 120V quartz lamp (mini-can)
	HAL127025	100W-B	2 100W, 120V quartz lamp (bayonet) (prior to 1992)
✻	HAL127033	250W-B	2 250W, 120V quartz lamp (bayonet) (prior to 1992)
	AEQO344	O-344	4 Gasket for 4" lens (replaces 79108500)
	PEN619355	619355	6 Pilot Screw, Stainless Steel with Gum Washer
	PEN79104800	79104800	6 Pilot Screw, Brass with Gum Washer
	PEN79111600	79111600	8 Face Ring - Stainless Steel
	PEN79204600	79204600	Niche Gasket, each (3 required)
	PEN79206000	79206000	Niche Sealing Ring
			Spa Brite® Parts
	PEN79107800	79107800	1 Clear Lens, 4" Tempered
✻	HAL107850	107850	2 60 Watt, 120V Halogen Lamp (medium base)
	HAL9116	100W	100 Watt, 120V Floodlamp (medium base)
	AEQO344	O-344	4 Gasket for 4" Lens (replaces 79108500)
	PEN79108900	79108900	Red Lens Cover - Aqua-Light or Spa Brite
	PEN79109000	79109000	Blue Lens Cover - Aqua-Light or Spa Brite
			Swimquip Parts
	PEN050550003	05055-0003	Clear Lens
	PEN050570118	05057-0118	Gasket for Lens Color Kit
	PEN373370079	37337-0079	Retaining Screw
	PEN331030006	33103-0006	E-ring
			Hydrel Parts
	HAL127024	100W-MC	100W, 120V quartz lamp (mini-can)
	HAL127032	250W-MC	250W, 120V quartz lamp (mini-can)
	HAL127025	100W-B	100W, 120V quartz lamp (bayonet) (prior to 1990)
✻	HAL127033	250W-B	250W, 120V quartz lamp (bayonet) (prior to 1990)

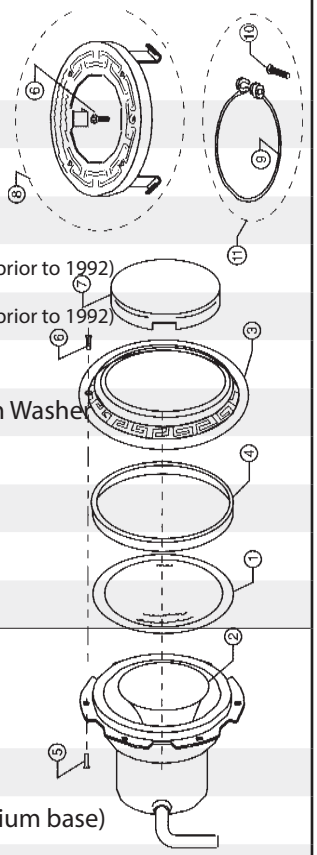

Aqua-Light and Spa Brite use the same niche.

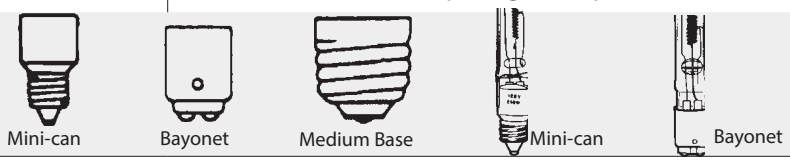

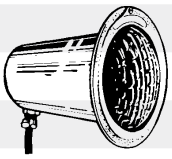

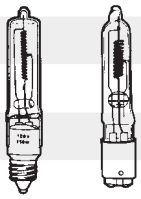

All items cataloged are normally stocked unless noted.
Not Stocked ✻ While Supplies Last

QUALITY POOL SUPPLY

Code	New Product Number	Old Product Number	Description
PENTAIR		**Amerlite™ Parts**	
	PEN98204400	98204400	3 Screw for Clip, Stainless Steel
	PEN79104800	79104800	5 Pilot Screw, Brass
	PEN619355	619355	5 Pilot Screw, Stainless Steel
	PEN79100100	79100100	12 Clear Lens, 8 3/8"
	PEN79100200	79100200	12 Medium Blue Lens, 8 3/8"
	AEQO170	O-170	13 Gasket for lens (replaces 79101600Z)
	PEN79101600Z	79101600Z	13 Gasket for lens (Pentair OEM gasket) (white)
	HAL104042	500W	14 500W 120V Bulb (medium base)
✻	HAL5508	400W	14 400W 120V Bulb (medium base) round
	HAL104038	400W-Flood	400W 120V Bulb (medium base) Flood
	HAL107850	107850	14 60W 120V Halogen Lamp (medium base)
	HAL9116	100W	100W 120V Floodlamp (medium base)
	HAL104040	300W-12V	300W 12V Floodlamp (medium base)
	HAL104035	300W	14 300W 120V Floodlamp (medium base)
✻	HAL127196	500W-D	Amer Quartz 500W 120V T3 Double Ended (79131100)
		Niche Parts	
	PEN98202600	98202600	Screw - 1" Phillips flat head
	AEQG168	G-168	Gasket (each), 8 hole pattern, 2 Required (79200300)
	PEN79200100	79200100	Sealing Ring, Chrome/Brass, 8 hole pattern
	AEQG110P	G-110P	Paper Gasket (each), 10 hole pattern, 2 Required (79200400)
	PEN79200200	79200200	Sealing Ring, Chrome/Brass, 10 hole pattern
	AEQG96	G-96	Rubber Gasket (each), 10 hole pattern (SPX0506D)
		Spectrum Amerlite (SAm) Parts	
✻	HAL70761	75W-FLOOD	75 Watt 12V Lamp, 2 required per fixture (79112400)
		Sealed Beam Bulbs for Hayward (Wide Flood)	
	HAL65230	WFL300	300W, 120V, Par 56, Mogul End Prong (SPX0500Z3)

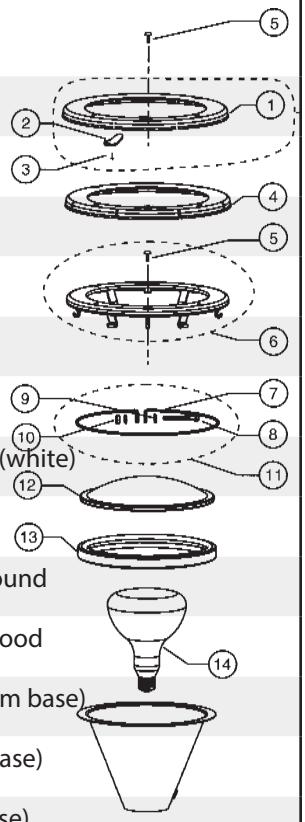

All items cataloged are normally stocked unless noted.

Not Stocked ✻ While Supplies Last

Code	New Product Number	Old Product Number	Description
PENTAIR		**Aqua-Lumin III Parts**	
	PEN78872600	78872600	5 Mounting spacer
	PEN619617Z	619617Z	6 Housing spacer
		Light Assembly Parts	
	PEN619599Z	619599Z	3 Gasket Lens Replacement
	PEN78889900	78889900	4 Captive Screw
	PEN619792	619792	6 Sealing screws (10 reg)
	HAL107216	250W-D	(not shown) 120V Aqualumin Bulb
		Aqua-Lumin II Parts	
	PEN78872600	78872600	5 Mounting spacer
	PEN78882100	78882100	6 Housing spacer
		Light Assembly Parts	
	PEN78880400	78880400	1 Face Ring, White
	PEN78880300	78880300	2 Lens
	PEN78880200	78880200	3 Lens seal
	PEN78889900	78889900	4 Pilot screw, 10-24 x ⅜
	HAL107214	150W-D	5a 12 Volt AquaLumin bulb
	HAL107216	250W-D	5b 120 Volt AquaLumin bulb kits
	HAL107208	250W-DS	5c 120 Volt AquaLumin bulb (short)
	PEN78881400	78881400	6 Sealing screws, 10 required

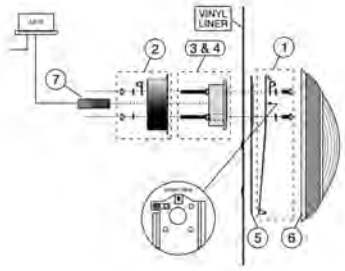

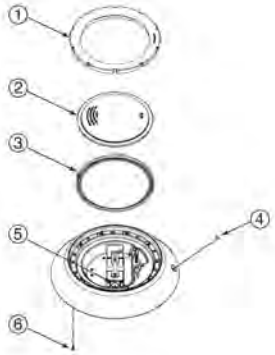

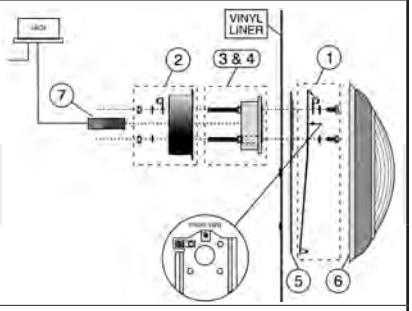

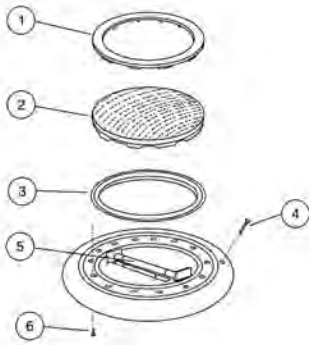

All items cataloged are normally stocked unless noted.
Not Stocked ✻ While Supplies Last

Code	New Product Number	Old Product Number	Description
			Aqua-Luminator Above Ground Light Parts
	PEN691000	691000	Bulb Assembly
	PEN791000	791000	Fountain Attachment - fits all Aqua Luminator models
			QuickNiche Vinyl Liner Niche Replacement Parts
	PEN630056	630056	1 Screw Kit, QuickNiche, 10 hole 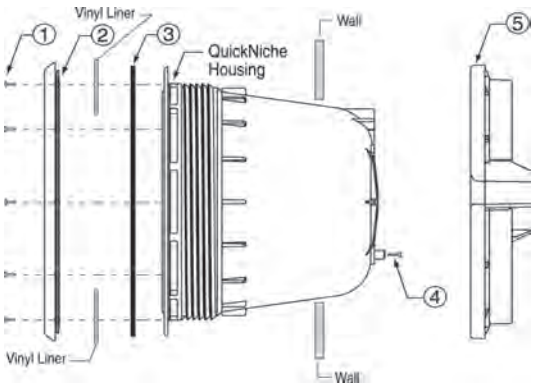
	PEN630017	630017	2 Face Ring with Gasket
	PEN630025	630025	3 Gasket
	PEN990010	990010	4 Bonding Screw (10-24 x 7/16")
	PEN630016	630016	5 Lock Ring
	PEN619555	619555	Bonding Lug Kit
	PEN630022	630022	Screw, Pilot
	PEN630023	630023	Silicone Packet

All items cataloged are normally stocked unless noted.

Not Stocked ✻ While Supplies Last

PRODUCTS

Deck Jets....439

Global Slides....424

Inter-Fab Diving Stands....434

Saftron....437

SR Smith Ladders....437

SR Smith Slides....428

SR Smith Diving Boards....432

PARTS

Anchors....438

Diving Board Parts....441

Escutcheons....438

Ladder Parts....442

SR Smith Slide Parts....440

QUALITY POOL SUPPLY

Code	New Product Number	Old Product Number	Description

GLOBAL POOL PRODUCTS

Salt Water Approved

MADE IN

Rip Tide

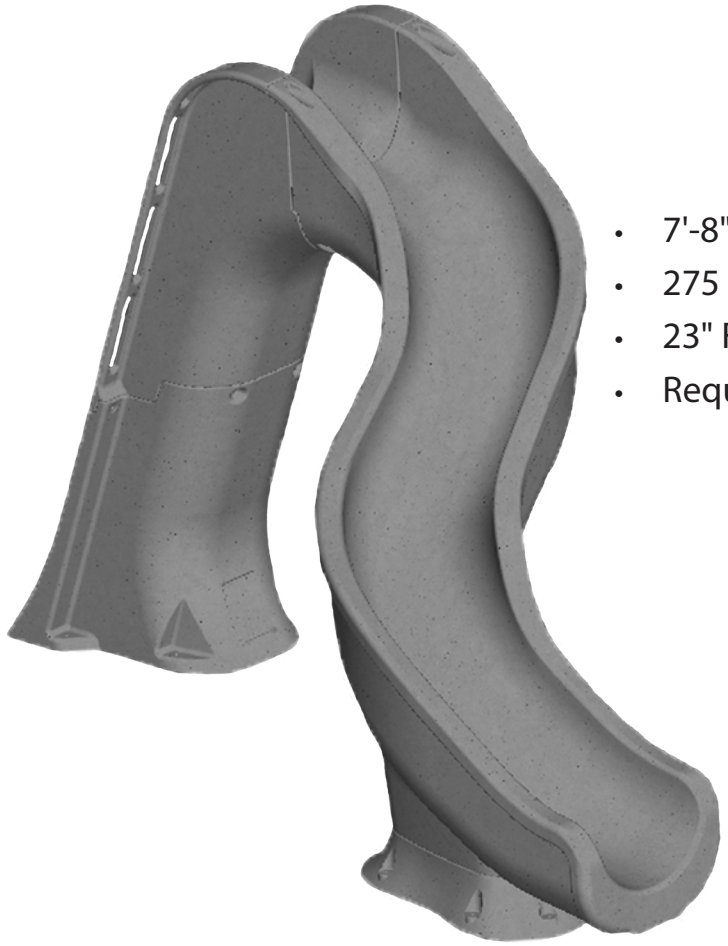

- 7'-8" Height
- 275 lb. Weight Limit
- 23" Flume with Right or Left Entry Available
- Required Deck Space - 12'6" x 6'6"

Rip Tide

- Modern Design with Fully Enclosed Plumbing
- Wide and Deep Flumes for a Fun and Safe Slide Experience
- Maximum Water Flow for Optimal Flume Coverage
- All Slides Backed by a 3 Year Limited Warranty
- Slide is also available with LED Light Package (Contact your Local Branch for pricing)

	GPPSRTGREYR	RT-GREY-R	Grey Right
CALL	GPPSRTGREYL	RT-GREY-L	Grey Left
CALL	GPPSRTSANDR	RT-SAND-R	Sand Right
CALL	GPPSRTSANDL	RT-SAND-L	Sand Left

All items cataloged are normally stocked unless noted.

Not Stocked ✻ While Supplies Last

Code	New Product Number	Old Product Number	Description

GLOBAL POOL PRODUCTS

MADE IN

Tidal Wave

- 7'-8" Height
- 275 lb. Weight Limit
- 22" Flume with Right or Left Entry Available
- Required Deck Space - 12' x 6'

Tidal Wave

- Modern Design with Fully Enclosed Plumbing
- Wide and Deep Flumes for a Fun and Safe Slide Experience
- Maximum Water Flow for Optimal Flume Coverage
- All Slides Backed by a 3 Year Limited Warranty
- Slide is also available with LED Light Package (Contact your Local Branch for pricing)

	GPPSTWGREYR	TW-GREY-R	Grey Right
	GPPSTWGREYL	TW-GREY-L	Grey Left
CALL	GPPSTWSANDR	TW-SAND-R	Sand Right
CALL	GPPSTWSANDL	TW-SAND-L	Sand Left

QUALITY POOL SUPPLY

Code	New Product Number	Old Product Number	Description

GLOBAL POOL PRODUCTS

MADE IN

Tsunami

- 7'-8" Height
- 275 lb. Weight Limit
- 23" Flume with Right or Left Entry Available
- Required Deck Space - 9'-6" x 5'

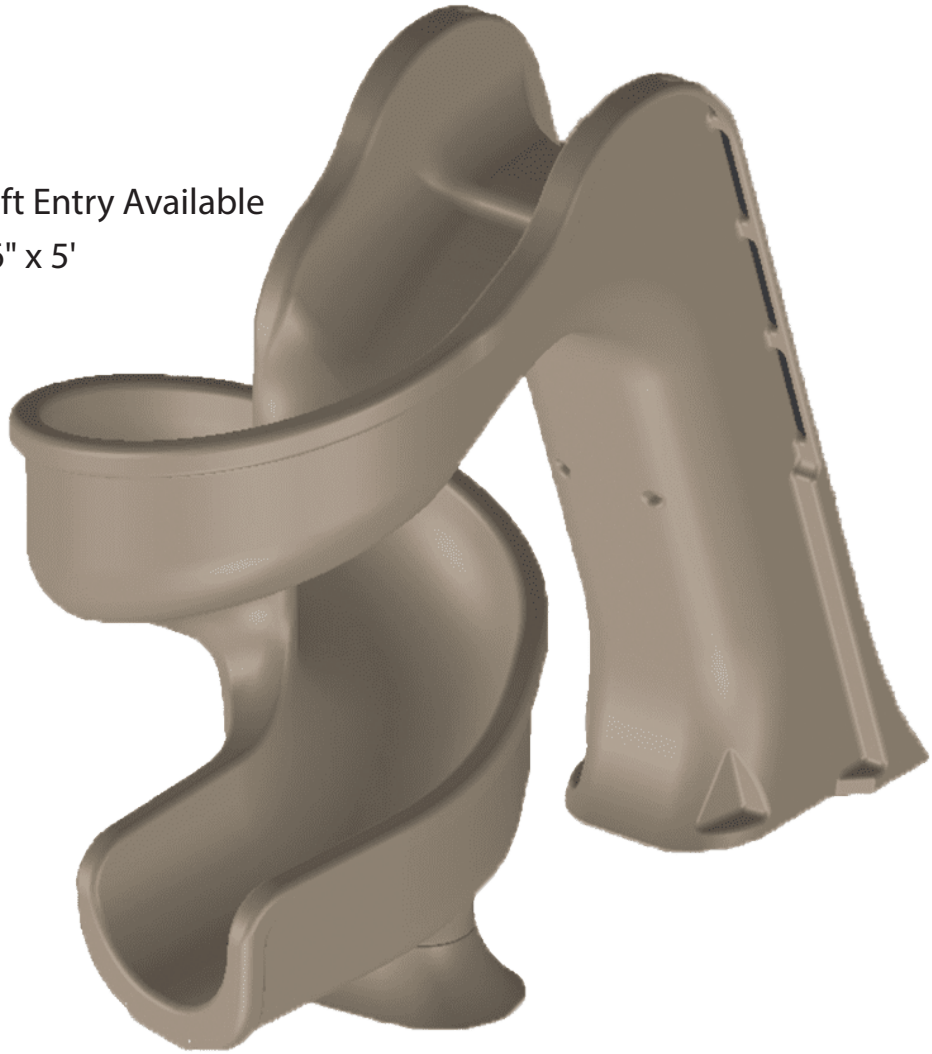

Tsunami

- Modern Design with Fully Enclosed Plumbing
- Wide and Deep Flumes for a Fun and Safe Slide Experience
- Maximum Water Flow for Optimal Flume Coverage
- All Slides Backed by a 3 Year Limited Warranty
- Slide is also available with LED Light Package (Contact your Local Branch for pricing)

CALL	GPPSTSGREY	TS-GREY	Grey
CALL	GPPSTSSAND	TS-SAND	Sand

All items cataloged are normally stocked unless noted.

Not Stocked ✻ While Supplies Last

When people want more from their pools, they choose S.R.Smith. For nearly 90 years, S.R.Smith has continued to evolve, innovate, and expand its pool-enhancing capabilities. Today we offer a broad range of solutions for pool owners and operators worldwide that promote fun, empower relaxation, elevate usability, and boost functionality. This is why our products are the first choice for enhancing pool lifestyles and why with a S.R.Smith product on your pool you will Pool **Better**™.

Deck Mounted Pool Slides

Diving Boards

Modern Rails

Custom Pool Slides

Pool Games

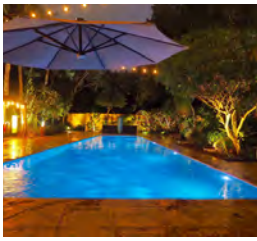
Pool Lighting

LEARN MORE AT SRSMITH.COM/DEALERCENTRAL

QUALITY POOL SUPPLY

Code	New Product Number	Old Product Number	Description	

SR Smith™

TurboTwister®

We make every attempt to stock the slides in the right color and curve.

In the event that we have to order your slide, we will cover the shipping costs and have it to you as soon as it is available from the manufacturer.

Lead times will vary, please contact your sales rep when ordering for accurate availability.

Turbo Twister

- Over 8' Tall, 6 - piece design for easy storage and handling
- Water delivery system pumps 25 gallons per minute max
- Accommodates sliders up to 275 pounds
- 3 year warranty

CALL	SSR68820958123	688-209-58123	Right Curve	Sandstone
CALL	SSR68820958223	688-209-58223	Left Curve	Sandstone
CALL	SSR68820958124	688-209-58124	Right Curve	Gray Granite
CALL	SSR68820958224	688-209-58224	Left Curve	Gray Granite

All items cataloged are normally stocked unless noted.

Not Stocked ✻ While Supplies Last

Code	New Product Number	Old Product Number	Description

S.R. Smith™

Typhoon®

We make every attempt to stock the slides in the right color and curve.

In the event that we have to order your slide, we will cover the shipping costs and have it to you as soon as it is available from the manufacturer.

Lead times will vary, please contact your sales rep when ordering for accurate availability.

Typhoon

- 7'4" in height (6'5.6" to the seat)
- Accommodates sliders up to 275 pounds
- Enclosed ladder and molded handrail design for maximum safety
- 20 gpm max water delivery system can be plumbed through the pool return line or connected to a garden hose
- Simple deck mounted installation
- Available with a right or left curved flume
- 3 year warranty

	SSR67020958124	670-209-58124	Right Curve	Gray Granite
	SSR67020958224	670-209-58224	Left Curve	Gray Granite
CALL	SSR67020958123	670-209-58123	Right Curve	Sandstone
CALL	SSR67020958223	670-209-58223	Left Curve	Sandstone

All items cataloged are normally stocked unless noted.

Not Stocked ✻ While Supplies Last

QUALITY POOL SUPPLY

Code	New Product Number	Old Product Number	Description

SR Smith™

heliX2®

We make every attempt to stock the slides in the right color and curve.

In the event that we have to order your slide, we will cover the shipping costs and have it to you as soon as it is available from the manufacturer.

Lead times will vary, please contact your sales rep when ordering for accurate availability.

heliX2

- 7'4" in height (6' 5.5" to the seat)
- All-in-one 360° adventure ride with a deeper flume
- Patented water feature with improved delivery water flume operates together or separately
- Enclosed stairs and integrated ladder for safety
- Accommodates sliders up to 250 pounds
- 3 year warranty

	SSR64020958124	640-209-58124	Gray Granite
	SSR64020958123	640-209-58123	Sandstone
	SSR64020958120	640-209-58120	Solid Grey
	SSR64020958110	640-209-58110	Solid Taupe

All items cataloged are normally stocked unless noted.

Not Stocked ✻ While Supplies Last

Code	New Product Number	Old Product Number	Description

SR Smith™

Rogue2™

We make every attempt to stock the slides in the right color and curve.

In the event that we have to order your slide, we will cover the shipping costs and have it to you as soon as it is available from the manufacturer.

Lead times will vary, please contact your sales rep when ordering for accurate availability.

Rogue2 Slide

- 8' Height (6' 6" to seat)
- Accommodates sliders up to 250 pounds
- Wide flume with high walls
- Water delivery system can be plumbed through the pool's return line or connected to a garden hose
- Anchors not included
- 3 year warranty

CALL	SSR6102095812	610-209-5812	Right curve White
	SSR6102095813	610-209-5813	Right curve Blue
CALL	SSR6102095822	610-209-5822	Left curve White
	SSR6102095823	610-209-5823	Left curve Blue
	SSR61020958110	610-209-58110	Right curve Taupe
	SSR61020958120	610-209-58120	Right curve Gray
	SSR61020958210	610-209-58210	Left curve Taupe
	SSR61020958220	610-209-58220	Left curve Gray

QUALITY POOL SUPPLY

Code	New Product Number	Old Product Number	Description		
SR Smith		**Diving / Jump Boards**			
		Fibre-Dive Fiberglass reinforced core, acrylic shell with flexible outer edge, matte backside, non-slip sanded tread			
	SSR66209266S21	FD6RW	6'	Radiant White	2 Holes
	SSR66209266S31	FD6MB	6'	Marine Blue	
	SSR66209268S21	FD8RW	8'	Radiant White	
	SSR66209268S31	FD8MB	8'	Marine Blue	
	SSR66209270S21	FD10RW	10'	Radiant White	
	SSR66209270S31	FD10MB	10'	Marine Blue	
		Frontier III Fiberglass reinforced core, acrylic shell with flexible outer edge, matte backside, non-slip sanded tread			
	SSR66209596S2	F36RW	6'	Radiant White	2 Holes
	SSR66209596S3	F36MB	6'	Marine Blue	
	SSR66209598S2	F38RW	8'	Radiant White	
	SSR66209598S3	F38MB	8'	Marine Blue	
	SSR66209600S2	F310RW	10'	Radiant White	
	SSR66209600S3	F310MB	10'	Marine Blue	
		Frontier II Fiberglass reinforced core, acrylic shell with flexible outer edge, matte backside, non-slip sanded tread			
	SSR66209586S2	F26RW	6'	Radiant White Board ONLY	3 Holes
	SSR66209586S3	F26MB	6'	Marine Blue Board ONLY	
	SSR692095886	F26S	6'	Spring with JIG	
	SSR66209588S2	F28RW	8'	Radiant White Board ONLY	
	SSR66209588S3	F28MB	8'	Marine Blue Board ONLY	
	SSR692095888	F28S	8'	Spring with JIG	
		Glas-Hide Includes flow-coat, smooth backside			
	SSR66209208S21	66-209-208S2-1	8'	Radiant White	2 Holes

All items cataloged are normally stocked unless noted.

Not Stocked ✻ While Supplies Last

Code	New Product Number	Old Product Number	Description	
		Diving / Jump Boards		
		Flyte Deck II Dive Stand with Jig (board not included)		
	SSR702097362	FLY6	6'	Radiant White
	SSR702097382	FLY8	8'	Radiant White
	SSR702097402	FLY10	10'	Radiant White
		Cantilever Jump Stand (board not included)		
	SSR69209001	69-209-001	606/608 Steel Base W/JIG	
	SSR69209026	69-209-026	606 Spring Assembly (Complete) FOR 6' Board	
	SSR69209028	69-209-028	608 Spring Assembly (Complete) FOR 8' Board	
		Supreme Jump Stand (board not included)		
	SSR69209008	69-209-008	656/658 SUPREME Base w/Jig - White	
	SSR69209026	69-209-026	606 Spring Assembly (Complete) FOR 6' Board	
	SSR69209028	69-209-028	608 Spring Assembly (Complete) FOR 8' Board	

Board & Stand Selector

Stands	Type	Jump Board	Diving Board
		Compatible Boards & Performance Category	
Cantilever	Jump Stand: Powder-coated Steel	Frontier III	
Supreme	Jump Stand: Acrylic Reinforced Fiberglass	Frontier III	
Frontier II	Jump Stand: Powder-coated Steel	Frontier II	
U-Frame	Dive Stand: Stainless Steel Tubing		Fibre-Dive, Frontier III
Flyte-Deck II	Dive Stand: Acrylic Reinforced Fiberglass		Frontier III, Fibre-Dive

Code	New Product Number	Old Product Number	Description	
			Diving / Jump Boards The following boards have a weight limit of 250 lbs. Choose: White tread with either blue or white trim. Acrylic surface, fiberglass reinforced, hardware included.	
			Olympian Solid Wood Core	
			LENGTH	TRIM COLOR
*	SSROLY10WW	OLY10WW	10'	White
			Duro-Spring Non-Solid Wood Core	
*	SSRDSS8	DSS-8	8' Spring Assembly	
			U-Style Diving Frames	
	SSRUF18101	UF-18-101	18" Height - For 6', 8', and 10' boards	
	SSRUF24102	UF-24-102	24" Height - For 10' and 12' boards	
*	SSRDBU24065	DBU24065	24" Height - For 10' and 12' boards	
			Diving Board Stands	
			La Mesa Base (board not included) **Compatible Boards:** Duro-Beam Boards, Techni-Beam or Olympian White Acrylic Coated Fiberglass - Includes Base, Jig, and Hardware	
			LENGTH	
*	SSRLAM10	LAM10	10'	
*	SSRDBU24065	DBU24065	24" Height - For 10' and 12' boards	

All items cataloged are normally stocked unless noted.

Not Stocked * While Supplies Last

Code	New Product Number	Old Product Number	Description

Ideal for Salt Chlorinated Pools

EDGE™ Diving System

- Acrylic & Fiberglass with Composite Springs - Ideal for Salt Water Pools!
- Available in 6' or 8' - both boards use the same spring & base
- Can be used for retro fit applications with existing 12" on center TSB jigs
- Stocked in white. Call for pricing and availability on blue, gray, tan and black
- 300 lb. weight limit

Code	New Product Number	Old Product Number	Description
	SSREDGE6WW	EDGE6WW	Edge 6' Diving Board with SS Hardware - White
	SSREDGE8WW	EDGE8WW	Edge 8' Diving Board with SS Hardware - White
	SSREDGESPRING	EDGE-SPRING	Edge Spring Assembly - White
	SSREDGEBASE	EDGE-BASE	Edge Fiberglass Base - White

Note: Special order springs and base will match the color of the board.

T7™ Diving System

- Durable acrylic and fiberglass construction with advanced composite springs
- Salt-Pool friendly
- UV protection to resist fading
- 300 lb. weight limit

Code	New Product Number	Old Product Number	Description
✻	SSRT7DBGR	T 7 DB-GR	7' Diving Board with Stainless Steel Hardware

All items cataloged are normally stocked unless noted.

Not Stocked ✻ While Supplies Last

Code	New Product Number	Old Product Number	Description
			Handrails SR Smith's patent pending Designer Series Rails are the stylish alternative to traditional pool rails ... "Form Follows Function" so Designer Rails are true to the function of the traditional rail. For easy replacement Designer Series Rails are configured to fit anchor sockets of traditional rails. Designer Series Rails can be upgraded in 6 elegant powder coat colors and 3 Thermo Plastic Coated (TPC) colors. For salt pools. A Marine Grade 316 L stainless steel option is also available.
		Designer Series Rails	
	SSRDRD3D50065	50RTD-D	Designer 3 Bend Deck to Deck return stair rail (50" Span)
	GPPMRGR30SS2	FIG4-D	Designer Figure 4 Grab Rail (Sold as a Pair)
	GPPMLD3STSSSST	3S-D	Designer 3 Step Ladder with Sure-Step Tread 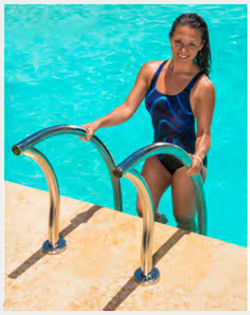

All items cataloged are normally stocked unless noted.

Not Stocked ✻ While Supplies Last

Code	New Product Number	Old Product Number	Description
		Ladder 1.90" x .049"	
CALL	SSRRLF24E2A3P	2P	2 Ladder - plastic treads
	SSRVLLS103E	3P	3 Ladder - plastic treads
	GPPLDE492STSSSST	2S	2 Ladder - stainless treads
	GPPLDE493STSSSST	3S	3 Ladder - stainless treads
		Handrails 1.90" X .049"	
	SSR50766	50-766	40" 2-Bend Deck-to-Deck (Pair)
	GPPRLC493BSR4SS	48H	48" 2-Bend Deck-to-Stair
	GPPRLC493BSR5SS	60H	60" 2-Bend Deck-to-Stair
	GPPRLC493BSR6SS	72H	72" 3-Bend Deck-to-Stair
	GPPRLC493BSS	50RTD	50" Return-to-deck
	SSRDMS102A	FIG4-DTW	Large Fig. 4 "Dip To Water"
	GPPRLC4926FIG4P2	FIG4	Figure 4 Grab Rails (Pair)
CALL	SFTP326RTDW	P326W	Grab Rail - Figure 4
CALL	SFTP324L3W	P324L3W	Ladder - 3 Step - White
CALL	SFTRTD448W	P448W	Handrail 48" Return-To-Deck - White
CALL	SFTANCH1	ANCH-I	Non-Corroding Composite Anchor Socket
CALL	SFTP324L3GG	P324L3GG	Ladder - 3 Step - Grey (stocked in Perrysburg only)
CALL	SFTRTD448GG	P448GG	Handrail 48" Return-To-Deck - Graphite Grey (stocked in Perrysburg only)

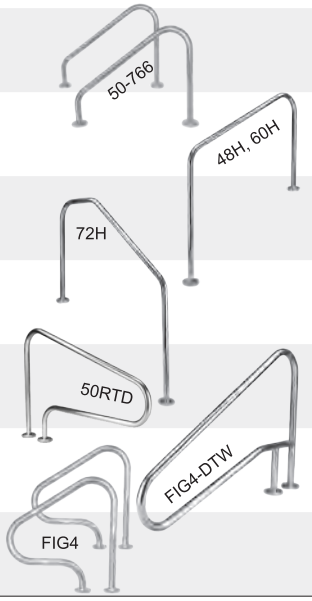

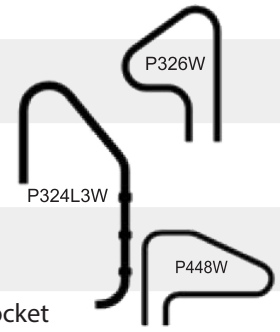

All items cataloged are normally stocked unless noted.

Not Stocked ✻ While Supplies Last

QUALITY POOL SUPPLY

Code	New Product Number	Old Product Number	Description
		Rail Anchors	
	PMCPS4019C	A	4" Aluminum Anchor
	PMCPS4019BC	B	4" Bronze Anchor
		Mounted Anchors	
	PMCPF2119L	#20	Top Mount White Aluminum anchor 1.9"
	PMCPF2116L	#23	Top Mount White Aluminum anchor 1.625"
	PMCPF3119	PF-3119	Top Mount Aluminum (Powder Coated)
	PMCPF25	#25-0	Top Mount Plastic Flange
	PMCPFWEDGE	75-901-10	Hardware for Top Mounting (4-concrete anchors)
		Channel Mounted Anchors With galvanized steel connecting bar	
	PMCPC4020AC	AC	4" Aluminum Channel Set 20"
	PMCPC4020BC	BC	4" Bronze Channel Set 20"
	PMCPC4008AC	AC8	4" Aluminum Channel Set with 8" centers
	PMCPC4008B	BC8	4" Bronze Channel Set with 8" Centers
	PMCPC4020P	PC-4020-P	4" Plastic Channel Set 20"
	PMCPC4008P	PC-4008-P	4" Plastic Channel Set 8"
	PMCPS4019P	PS-4019-P	4" Plastic Anchor (Great for Salt Water Pools)
	SSRAS100P	AS-100P	6" SR Smith Plastic Anchor
	PMCPS6019BC	PS-6019-BC	6" Bronze Anchor for 1.9" Tube
	PMCPS60Cap	PS-60-CAP	Flush Mount Caps for 1.9" Anchors
		Escutcheons	
	PMCPE0019W	#11	White Plastic
	PMCPE0019C	#12	Chrome Plated Plastic
	PMCPE0019S	PE-0019-S	Stainless Steel
		Accessories	
	PMCPW4C	#40	Bronze Wedge, Bolt & Washer
	PMCPWP	PW-P	Replacement Wedge for Plastic anchors
	PTC146	PT146	Deck Anchor Repair Plate
	PTC104B	PT104B	Anti-Electrolysis Zinc Anode- Attaches to rails
	PMCJH0019B	JH-0019-B	Johnny Hinge: Constructed of corrosion resistant bronze, Set of 2

A

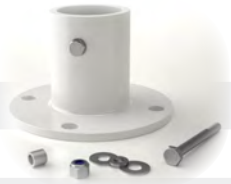
PF-3119

PC-4020-P

AS-100P

PS-6019-BC

PE-0019-S

#40

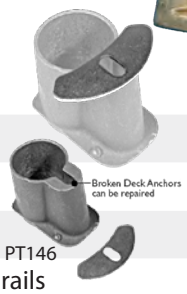

PT146

Johnny Hinge

All items cataloged are normally stocked unless noted.

Not Stocked ✻ While Supplies Last

Code	New Product Number	Old Product Number	Description
ZODIAC® a better life		**Deck Jets**	BRICK AND MORTAR NO INTERNET SALES
	JNDFFMJ	FFMJ	MiniJet - for pool deck or gunite wall - Easy to install - Jet adjustable to 45-degree angle - Low water flow requirement - Easy access to jet for adjusting arc of water up to 13 feet - Jet is removable and replaceable
	JNDFFMJVL	FFMJ-VL	MiniJet - for vinyl in-wall installation (not stocked)
Jandy® Pro Series		**Deck Jets**	
	JNDJDJ2004	JDJ2004	Deck Jets (Set of 4) - Arcs of water from a deck or patio - Adjustable up to 360° - 2 ½" in diameter and sold in a set of four - A pressure testing plug and polished bronze deck coverplates are included
PENTAIR		**Deck Jets**	
	PEN580000	580000	Deck Jet - for pool deck - 5 Interchangeable eyeballs - Streams reach eight feet - Spray pattern adjustable
	PEN580003	580003	Magic Stream Deck Jet II - Set of 4 - Adjustable height up to 6 feet and 360 degrees - Easy to adjust nozzles - Low water flow requirements

All items cataloged are normally stocked unless noted.

Not Stocked ✻ While Supplies Last

QUALITY POOL SUPPLY

SR Smith

Slide Parts

All parts except first item are compatible with Aquaslide slides.

Code	New Product Number	Old Product Number	Description
*	SSR69209035	69-209-035	SS Ladder Bolt and Water Piping Kit Bag for Frontier II
	SSR69209041	69-209-041	Water Piping Kit only (all tubing & fittings) for Frontier II only
	SSR69209048	69-209-048	Water Piping Kit only (all tubing & fittings) for Frontier III only
	SSR69209037	69-209-037	Hose Connector Assembly (Frontier II)
	SSR69209039	69-209-039	70° Top Nozzle Assembly (Frontier II)
	SSR69209040	69-209-040	55° Bottom Nozzle Assembly (II & III)
	SSR05600	05-600	Nut Cap .625"
	SSR05603	05-603	70° Top Nozzle head
	SSR05604	05-604	55° Bottom Nozzle head
	SSR05618	05-618	Nut Cap ½" Plastic White
	SSR05632	05-632	Recessed Washer Assembly
*	SSR05634	05-634	Step Bolt Head Cap White
	SSR6300	6-300	Elite Tread End Cap
	AMGMV40401	MV4040-1	¼" X 100' Tubing
	SSR69209049	69-209-049	70° Top Nozzle Assy. (III)
	SSR69209050	69-209-050	Tube Tee Assy. (Frontier III)

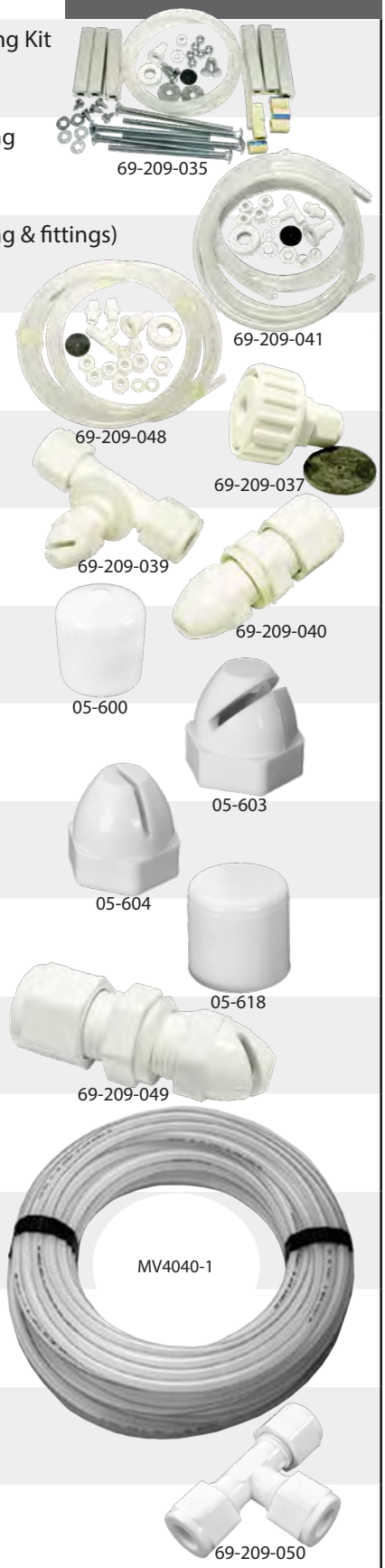

All items cataloged are normally stocked unless noted.

Not Stocked ✻ While Supplies Last

Bolt Kits & Hardware

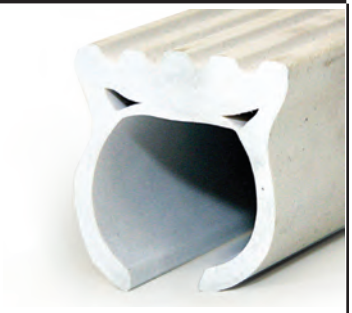

Code	New Product Number	Old Product Number	Description
	SSRFC100A	FC-100A	Fulcrum pad - 18"
✻	SSRDSM	DS-M	Duro-Spring board mounting hardware kit for 3-hole boards

	SSR67209911SS	67-209-911-SS	Residential Bolt Kit for 2-Hole Boards - ½" x 4-½"
	SSR69209032SS	69-209-032-SS	Frontier II Board Bolt Kit (3 bolts)
	SSR69209033SS	69-209-033-SS	Frontier II Spring Anchor Kit (3 bolts)

All items cataloged are normally stocked unless noted.
Not Stocked ✻ While Supplies Last

Code	New Product Number	Old Product Number	Description
		Ladder Parts	
	AMGWRB100A	LB	**Male Ladder Bumper** LB
	SSRWRB101A	WRB-101A	**Female Rubber Bumper** 1.9" - White WRB-101A
	SSRLTDF101	LTDF-101	**S.R. Smith: Plastic Tread** Center length: 17.25" Overall length: 18.25" Width: 2.875" at end LTDF-101
	SSRLTDF103	LTDF-103	**S.R. Smith: Stainless Steel Tread** Center length: 18.25" Overall length: 19.25" Width: 2.875" at end LTDF-103
✻	SSRSUT	SUT	**Interfab: Sure-Step Tread** Center length: 18.1875" Overall length: 19.375" Width: 3.0625" at end SUT
		Bolt Packs	
	SSR60701	60-701	Bolt Pack for 2-step stainless tread ladder (4 bolts) Bolt Packs
	SSR60702	60-702	Bolt Pack for 3-step stainless tread ladder (6 bolts)
	SSR60703	60-703	Bolt Pack for 2-step plastic tread ladder (4 bolts)
	SSR60704	60-704	Bolt Pack for 3-step plastic tread ladder (6 bolts)
	SSRA420770	42077-0	**Frost: Plastic Tread** **(7 ribs on top of tread)** Center length: 18.25" Overall length: 19.25" Width: 2.875" at end 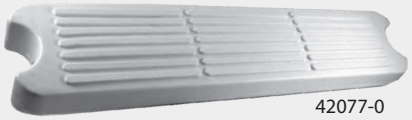 42077-0
	SSRA409091	40909-1	Bolt pack for tread (2 bolts, washers & nuts)
	SSRANODE	ANODE	Sacrificial Anode for Salt Pools

All items cataloged are normally stocked unless noted.

Not Stocked ✻ While Supplies Last

PRODUCTS

Baskets 446
Inlets 448
Main Drains 455
Skimmers 449
Skimmer Grilles 456
Skimmer Plugs 457

PARTS

Builder Pack Components 462
Inlet Parts 464
Main Drain Parts 463
Skimmer Parts 458

He Gets It.

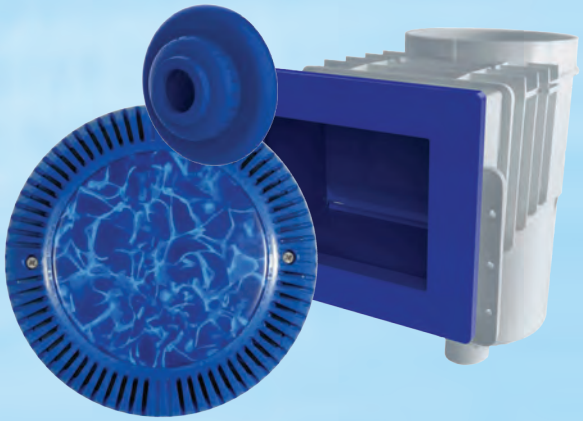

ColorMagic™
Swimming Pool Fixtures

Just like MAGIC... he's vanished. With **COLORMAGIC™ POOL FIXTURES** from GLI Pool Products your main drains, eyeball fittings, and skimmers no longer have to "stand" out... they too can practically disappear.

GLI Pool Products

www.glipoolproducts.com • 800-448-2343

Code	New Product Number	Old Product Number	Description
			10" Round Skimmer Cover • Matches most masonry pool finishes • Unique patented skimmer lid design makes it virtually disappear • Available in 5 colors • Fits pool skimmers: Hayward 1070, Pentair, StaRite, American, Waterway and others
CALL	PAL201GRAY	PL201G	Gray (stocked In Waterford Only)

All items cataloged are normally stocked unless noted.

Not Stocked ✻ While Supplies Last

QUALITY POOL SUPPLY

Aladdin

Skimmer Baskets

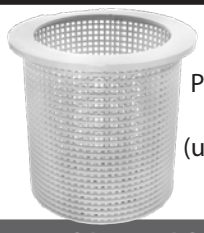

Pentair 85000100
Aladdin B-37
(uses 38013B Weir)

Code	New Product Number	Old Product Number	Description	OEM Name	OEM No.	TOP	BOTTOM	DEEP
	AEQB9	B-9		Hayward	SPX1070E	8 5/16	5 3/4	5 3/16
	AEQB9	B-9		Swimquip U3	08650-0007	8 5/16	5 3/4	5 3/16
	AEQB32	B-32		Amer. Products	85000200	8 7/16	7 1/2	4
	AEQB37	B-37		Amer. Prod. (large)	85000100	8 7/16	7 1/2	7 3/4
	AEQB43	B-43		PacFab	513036	7 1/4	5 5/16	4 5/8
	AEQB117	B-117		Hayward	SPX1080EA	7		5
	AEQB136	B-136		Baker Hydro	51-B-1026	7 13/16	5	6
	AEQB152	B-152		Hayward	SPX1082CA	7	6 1/2	5
	AEQB168	B-168		Hayward	SPX1096CA	5 9/16	5 1/8	3
	AEQB172	B-172		Amer. Products	85003900	6 5/8	4	3 7/8
	AEQB183	B-183		Jacuzzi	43-0507-07	7 7/8	6 7/8	4 1/2
	AEQB184	B-184		Jacuzzi	16-0964-06	5 3/16	4 7/16	5 3/8
	AEQB189	B-189		Clayton Lambert	P-287	7 7/8	6 1/4	4 7/8
	AEQB191	B-191		Buster Crabbe	HG130	8	5 1/4	5 7/8
	AEQB203	B-203		Hayward	SPX1094FA	5 5/16	3 5/8	3 1/8
	AEQB209	B-209		Aqua Leader	ALS003	6 1/2	4 1/8	3
	AEQB213	B-213		Olympic	ACM88	6 1/8	4 1/8	3

OEM Skimmer Baskets

SPX1082CA

	HPPSPX1082CA	SPX1082CA	Hayward Inground		7	6 1/2	5
	HPPSPX1094FA	SPX1094FA	Hayward Above ground		5 15/16	3 5/8	3 1/8
	HPPSPX1096CA	SPX1096CA	Hayward Above ground		5 9/16	5 1/8	3
	HPPSPX1088GA	SPX1088GA	Hayward Above ground		7	6 3/8	5
	HPPSPX1090WMSB	SPX1090WMSB	Hayward SP1090WM		6 5/8	4 5/8	2 3/4
	HPPSPX1070E	SPX1070E	Hayward SP1070 & SP1071 Series		8 5/16	5 3/4	5 3/16
	PEN516112	516112	PacFab (Bermuda Skimmer)		8 1/4	5 1/2	5 3/8

Skimmer Basket Accessories

	PTC104A	PT104A	**Anti-Electrolysis Basket Weight** Fastener included to attach to basket
	ROLUS12	US12	**Ultra Screen** - 5 Pack of Skimmer Liners Fits most baskets. Great for pine needles and Cottonwood.

All items cataloged are normally stocked unless noted.

Not Stocked ✻ While Supplies Last

Code	New Product Number	Old Product Number	Description
			Self-Anchoring Replacement Weirs
	OBP193001	OB193001	6" Spring Loaded Weir
	OBP193002	OB193002	7" Spring Loaded Weir
	OBP193003	OB193003	8" Spring Loaded Weir
	OBP193005	OB193005	10" Spring Loaded Weir
CALL	OBP193007	OB193007	12" Spring Loaded Weir
			Automatic Pool Fillers
	ROLM3000	M-3000	**The Pool Sentry** • Free-standing • Attaches to garden hose (hose not included) • Completely portable
	PENT40BW	T40BW	**Pentair Autofill with White Lid & Brass Float** • No electronic controls • Units with black, gray, and almond colored lids are available (special order)
	JNDK1100CKA	LEVOLOR	**Zodiac/Fluidra - Levolor** 110/220V With 50' Sensor and 1" Valve (K1100CKA)
			Sight Glass (commercial)
✻	SSR41198	41198	1 1/2" Bronze, Vertical

All items cataloged are normally stocked unless noted.
Not Stocked ✻ While Supplies Last

QUALITY POOL SUPPLY

Code	New Product Number	Old Product Number	Description	
		Inlet Wall Fittings		
		Vinyl Liner Inground		
	HPPSP1408	SP1408	1½"	FIP
CALL	HPPSP1408DGR	SP1408DGR	1½"	Dark Gray FIP
CALL	HPPSP1408S2	SP1408S2	2"	Slip
		Above Ground & Fiberglass		
	HPPSP1023	SP1023	1½"	FIP
	HPPSP1023S	SP1023S	1½"	Slip
	HPPSP1023S2	SP1023S2	2"	Slip
	HPPSP1023G	SP1023G	Same as SP1023 with sandwich gasket specifically for ABG pools	
		Concrete		
	HPPSP1022	SP1022	1½"	FIP x Standard Length
	HPPSP1022S	SP1022S	1½"	Slip x Standard Length
	AQP303803WHT	30-3803	1½"	Slip x Long (HydroAir)
	CMP23300210000	10-3100	Slip Fitting with nut, gasket & eyeball (HydroAir)	
	WWP2159890	215-9890	1½"	FPT x 2" Insider (fits inside 2" pipe) (Waterway)
	PEN542402	542402	1½"	MPT x Slip Long Body (Pentair)
		Suction Fittings		
	APP4HP101	4HP101	AquaStar 4" Sumpless Suction Outlet Cover (Requires R415T101 for use with standard pool fittings)	
	APPR415T101	R415T101	Adapter to use 4HP101 with standard pool wall fittings)	
		Eyeball Fittings		
	PEN84340000	8434-0000	1⅜" Return fitting pre-glued to SCH40 PVC (for concrete)	
	HPPSP1419E	SP1419E	1"	Hayward
	HPPSP1419EDGR	SP1419EDGR	1"	Hayward Dark Gray
	HPPSP1419D	SP1419D	¾"	Hayward
	HPPSP1419DGR	SP1419DGR	¾"	Hayward Gray
	HPPSP1419DDGR	SP1419DDGR	¾"	Hayward Gray
	CMP25552400000	862009	1"	CMP
	CMP25552300000	862008	¾"	CMP
	CMP25552200000	862007	½"	CMP
	CMP25552100000	862006	⅜"	CMP
	CMP25552000000	862010	Slotted	CMP
	HPPSP1419T	SP1419T	Hayward Eyeball & Winter Plug Removal Tool	
✻	HPPSP1420	SP1420	Eyeball with 1" Rubber nozzle	
	PEN542087	542087	Combination Eyeball (1", ¾", ½")	
	HPPSP1026	SP1026	1½"	Grate (Hayward) (do not use on suction fittings)
	PEN540056	540056	1½"	Grate (Pentair) (do not use on suction fittings)

SP1408

SP1023

SP1022

862009

862010

SP1420

540056

All items cataloged are normally stocked unless noted.

Not Stocked ✻ While Supplies Last

Code	New Product Number	Old Product Number	Description
		Skimmers	
		Admiral Series	
	PEN84120100	84120100	S15 Concrete - 1½"
CALL	PEN84120200	84120200	S15 Concrete - 2" (stocked in Waterford only)
CALL	PEN84151500	84151500	S15 Vinyl Liner - 1½", Short Throat, 12 Hole
	PEN84141100	84141100	S15 Vinyl Liner - 1½" , Short Throat, 10 Hole
	PEN84472400	84472400	S20 Vinyl Liner - 1½, Long Throat (13") Flap Weir
	PEN85001900	85001900	Vacuum Plate for above
	PEN85002300	85002300	Extension Collar for above
		SwimQuip	
	PEN086501403	8650-1403	U-3 for Gunite, 2", 1½" reducers included, Includes float & check valve
	PEN96551403	9655-1403	U-3 for Vinyl Pools, 2", 1½" reducers included
	PEN086500042	08650-0042	Vacuum Plate for U-3
	CMP25526000000	25526	Extension Collar for U-3
		Specialty Inlets	
	PEN084170000	08417-0000	Floor Inlet Fitting, 2" or 1½" Slip (Use only as a floor inlet fitting)
	PEN84290000	8429-0000	1½" Swimquip Inlet with Orifices, Solvent weld
		Winter Plugs	
	HPPSP1022C	SP1022C	1½" Winterizing Plug with o-ring (10% off an order of 50 or more!)
	AQPAPCO2392	O-125	O-ring for above

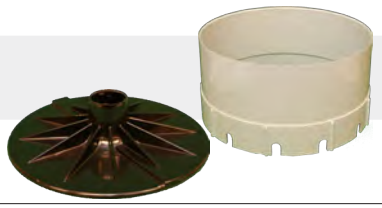

All items cataloged are normally stocked unless noted.
Not Stocked ✻ While Supplies Last

Code	New Product Number	Old Product Number	Description
HAYWARD		**Inground Skimmers**	
		Auto-Skim Series	
		Steel Wall Pool	
	HPPSP10841OM	SP10841OM	Standard - 1½" or 2" Includes 2" plug. For 2" installation you must purchase a 1½" plug (SPX1051Z1) Outside Mount Style
	HPPSP10841OMDGR	SP10841OMDGR	Dark Gray - Same as above
	HPPSP10852OM	SP10852OM	Wide Mouth - 1½" or 2". Includes 2" plug. For 2" installation you must purchase a 1½" plug (SPX1051Z1) Outside Mount Style
	HPPSP10852OMDGR	SP10852OMDGR	White - Same as above
		Fiberglass, Composite, or Structural Foam (Polymer)	
	HPPSP10841	SP10841	Standard - 1½" or 2" Includes 2" plug For 2" installation you must purchase a 1½" plug (SPX1051Z1)
	HPPSP1084	SP1084	Standard - 2" Includes 2" plug and 2" x 1½" reducer fitting
	HPPSP10852	SP10852	Wide mouth - 1½" or 2" Includes 1½" plug, 2" plug, and 2" x 1½" reducer fitting
	HPPSP1084F	SP1084F	Snap-on face plate cover for SP1084 Skimmers
	HPPSP1085F	SP1085F	Snap-on face plate cover for SP1085 Skimmers
Waterway		**Builder Packs**	
	All builder packs include one skimmer, two vinyl liner main drains 2" side x bottom, three return fittings 1.5" FPT x 1.5" socket, three 1" eyeball fittings 1.5" MPT		
	WWP5458400	545-8400	Standard Builder Pack White
	WWP5458500	545-8500	Widemouth Builder Pack White
	WWP5458407	545-8407	Standard Builder Pack Gray
	WWP5458507	545-8507	Widemouth Builder Pack Gray
		Inground Skimmers	
	CMP25160110200	25160-110-200	Vinyl Liner Skimmer, Deluxe, Wide Mouth; White
	CMP25160010200	25160-010-200	Vinyl Liner Skimmer Deluxe (Regular Mouth; Square Lid); White

All items cataloged are normally stocked unless noted.

Not Stocked ✻ While Supplies Last

Renegade Builder Pack Components

Code	New Product Number	Old Product Number	Description	
	WWP5408400	540-8400	Skimmer - Standard Opening - White	545-8400
	WWP5408407	540-8407	Skimmer - Standard Opening - Gray	545-8407
	WWP5408500	540-8500	Skimmer - Widemouth Opening - White	545-8500
	WWP5408507	540-8507	Skimmer - Widemouth Opening - Gray	545-8507
	WWP6402750V	640-2750V	Vinyl Main Drain & 8" Sump - 2" S - White	545-8400; 545-8500
CALL		640-2757V	Vinyl Main Drain & 8" Sump - 2" S - Gray	545-8407; 545-8507
	WWP4009060B	400-9060B	Wall Fitting - 1.5" FPT x 1.5" Skt - White	545-8400; 545-8500
	WWP4009067B	400-9067B	Wall Fitting - 1.5" FPT x 1.5" Skt - Gray	545-8407; 545-8507
	WWP2181440	218-1440	Wall Fitting Escutcheon - White	545-8400; 545-8500
	WWP2181447	218-1447	Wall Fitting Escutcheon - Gray	545-8407; 545-8507
	WWP4001410EB	400-1410EB	Eyeball - 1" Bagged - White	545-8400; 545-8500
	WWP4001417EB	400-1417EB	Eyeball - 1" Bagged - Gray	545-8407; 545-8507

All items cataloged are normally stocked unless noted.
Not Stocked ✻ While Supplies Last

QUALITY POOL SUPPLY

Code	New Product Number	Old Product Number	Description	
HAYWARD		**Above Ground Skimmers**		
		Dyna-Skim Above Ground 1½"		
	HPPSP1091LX	SP1091LX	Standard Skimmer - includes SP1023 inlet, (2) hose adapters & SP11041 Skim Vac	
	HPPSP1091WM	SP1091WM	Wide Mouth Skimmer - includes SP1023 inlet, 2 hose adapters & SP11041 Skim Vac	
	HPPSP1092	SP1092	Standard Skimmer w/Front Basket Access Only No Accessories Included	
RELIANT®				
	BCIB8410	B8410	Standard Skimmer White - includes B8541 adapter fitting and B8542 vac plate (No return fitting included)	
	BCIB8412	B8412	Widemouth Skimmer White - includes B8541 adapter fitting and B8542 vac plate (No return fitting included)	
HAYWARD		**Skim Vacs**		
		Above Ground		
	HPPSP1094D	SP1094D	1¼" or 1½" Elbow	(for SP1094, 95 skimmers)
	HPPSP11041	SP11041	1¼" or 1½" Elbow, 6" diameter	(for SP1090, 91, 92 skimmers)
	HPPSP11051	SP11051	1½" Straight Barb, 6" diameter with rubber seal	(for SP1090, 91, 96, 97, 98 skimmers)
	HPPSP11052	SP11052	1¼" Elbow, 6" diameter with rubber seal	(for SP1090, 91, 92, skimmers)
		Inground		
	HPPSP1106	SP1106	1½" Straight, 7¾" diameter with rubber seal	
	HPPSP1107	SP1107	1½" Straight, 7¾" diameter	
		Parts		
	HPPSPX1088H	SPX1088H	Elbow for SP11041	
	HPPSPX1091Z7PAK2	SPX1091Z7	Hose Adaptor 1½" MIP x 1¼" or 1½" Male Smooth Adapter	

All items cataloged are normally stocked unless noted.

Not Stocked ✻ While Supplies Last

Code	New Product Number	Old Product Number	Description
HAYWARD		**Residential Drains**	
		8" Round	
		All items are VGB Compliant	
		Vinyl Liner	
	HPPWG1048AVPAK2	WG1048AVPAK2	1½" Side & Bottom Outlet (2-Pack)
	HPPWG1048AVDGRP2	WG1048AVDGRPAK2	Dark Gray 1½" Side & Bottom Outlet (2-Pack)
	HPPWG1049AVPAK2	WG1049AVPAK2	2" Side & Bottom Outlet (2-Pack)
		Concrete	
	HPPWG1052AVPAK2	WG1052AVPAK2	2" Side Outlet and 1½" Bottom Outlet (2-Pack)
CALL	HPPWG1054AVPAK2	WG1054AVPAK2	2" Side & Bottom Outlet (2-Pack) (Stocked in Waterford Only)
		Hydrostatic Relief Valves	
	PEN070170151	07017-0151	1½" **PVC** Hydrostatic Valve
	PEN070170158	07017-0158	2" **PVC** Hydrostatic Valve
	PMCPV15	PV-15	1½" **Brass** Hydrostatic Valve
	PMCPV20	PV-20	2" **Brass** Hydrostatic Valve
	HPPSP1056	SP1056	1½" or 2" **PVC** Dual Hydrostatic Valve (Hayward)
	HPPSP1056T	SP1056T	Cycolac Relief Valve Tool
	HPPSP1055PAK2	SP1055	1½" or 2" FIP Pebble Collector Tube 12"

WG1048AVPAK2

WG1052AVPAK2

07017-0158

PV-15

SP1056

All items cataloged are normally stocked unless noted.

Not Stocked ✻ While Supplies Last

QUALITY POOL SUPPLY

Code	New Product Number	Old Product Number	Description	Flow Rate Floor (GPM)	Flow Rate Wall (GPM)	Replaces Part
PENTAIR			**Residential Drains**			
			8" Round StarGuard			
			All items are VGB Compliant			
			Concrete			
	PEN500110	500110	2" side & 1.5" bottom port (2 pack)	144	112	86104400 w/86105000 07017-0103 w/07017-0741
CALL	PEN500115	500115	2" side port (2 pack)	144	112	86104500 with 86105000 07017-0093 w/07017-0741
CALL	PEN500120	500120	Two 2" bottom ports (2 pack)	144	112	542031
			Vinyl Liner			
	PEN500130	500130	2" side & 1.5" bottom vinyl liner sump (2 pack)	144	112	07017-0126
			Frame & Grates Only			
	PEN500108	500108	Long ring (single)	144	112	86105000 07017-0741
CALL	PEN500103	500103	Short ring (single)	144	112	86107000
	PEN500140	500140	Long ring (2 pack)	144	112	
	APPA10RCFR101	A10RCFR101	10" White Star Sumpless Anti-Entrapment Suction Direct replacement for DS-360M			
ZODIAC a better life			**Main Drain Bridge**			
	ZOD5820	5820	**Unibridge - White** Creates surface for pool cleaners to travel over. Unibridge MUST ONLY be used with a properly installed, VGB-compliant suction outlet cover.			

500110

500108

A10RCFR101

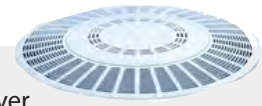
5820

All items cataloged are normally stocked unless noted.

Not Stocked ✻ While Supplies Last

Code	New Product Number	Old Product Number	Description	
		Commercial Main Drain All items are VGB Compliant		
		Sump Drains Only White Interior		
	AMIFPK50809	543099	9" x 9"	3" Side Suction
	AMIFBK508124	FBK508124	12" x 12"	4" Side Suction
	AMIFBK50812186	FBK50812186	12" x 12"	6" Side Suction
		Square Cover White, Unless Noted		
	WWP6404790V	640-4790V	9" x 9"	Cover & Frame
	WWP6404720V	640-4720V	12" x 12"	Cover & Frame
	WWP6424790V	642-4790V	9" x 9"	Cover Only
	WWP6404740V	640-4740V	12" x 12"	Cover Only
✻	WWP6424711	642-4711	9" x 9"	Frame Only - Black

543099

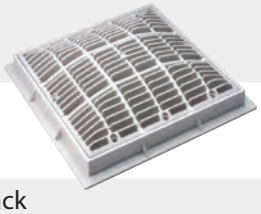

Technical Data

Manufacturer	Size	Part #	Open Area (Sq. In.)	GPM @ 1.0 FPS	GPM @ 1.5 FPS
Waterway	9" x 9"	640-4790V	43.6	135	203
Waterway	12" x 12"	640-4720V	62.4	194.7	292
Hayward	8 rd.	WGX1048E	8.1	25.2	37.8
Hayward	9" x 9"	WGX1031B	17.81	55.5	83.3
Hayward	12" x 12"	WGX1032B	32.37	100.9	151.4

All items cataloged are normally stocked unless noted.
Not Stocked ✻ While Supplies Last

Skimmer Grille

Code	New Product Number	Old Product Number	Description
	SMP87530701	G-AGSD-H	Standard 6" AG Skimmers - SP1090, 1091LX, SP1094, 1094W, 1095, Aquador 1090, and more
	SMP930750516	G-AGWM-H2	Widemouth AG Skimmers - SP1091WM
	SMP921450001	G-AGWM-H	Widemouth AG Skimmers - SP1090WM, Aquador 1010
	SMP951590601	G-IGSD-H	Standard 8" IG Skimmers - SP1084, Bermuda, U-3, Renegade, and more
	SMP990100000	G-IGWM-H	Widemouth IG Skimmers - SP1085, Renegade, and more

Lid'L Seal

Code	New Product Number	Old Product Number	Description
✻	AEQAG150	AG150	Lid'l Seal - Widemouth AG Skimmers
✻	SMP60010	AGL200	Lid'l Seal Replacement Lid for AG200B
✻	SMP181001	AGLG100	Lid'L Guard for AG100
✻	SMP70110	AGLG150	Lid'L Guard for AG150
✻	SMP070120	AGLG200	Lid'L Guard for AG200
	AQR1030	AQR1030	Seal for Lomart Above Ground Skimmers (Include Faceplate) 24/CS

Replacement Lids

			Fits:	IG / AG	Qty/Case
	AQPAQ71090	AQR71090	AQR1090	Above Ground	36
	AQPAQ71020	AQR71020	AQR1020	Above Ground	36
	AQPAQ71030	AQR71030	AQR1030	Above Ground	36
	AQPAQ71010	AQR71010	AQR1010	Above Ground	36

All items cataloged are normally stocked unless noted.

Not Stocked ✻ While Supplies Last

Code	New Product Number	Old Product Number	Description

simpooltec
pool technology... simplified.

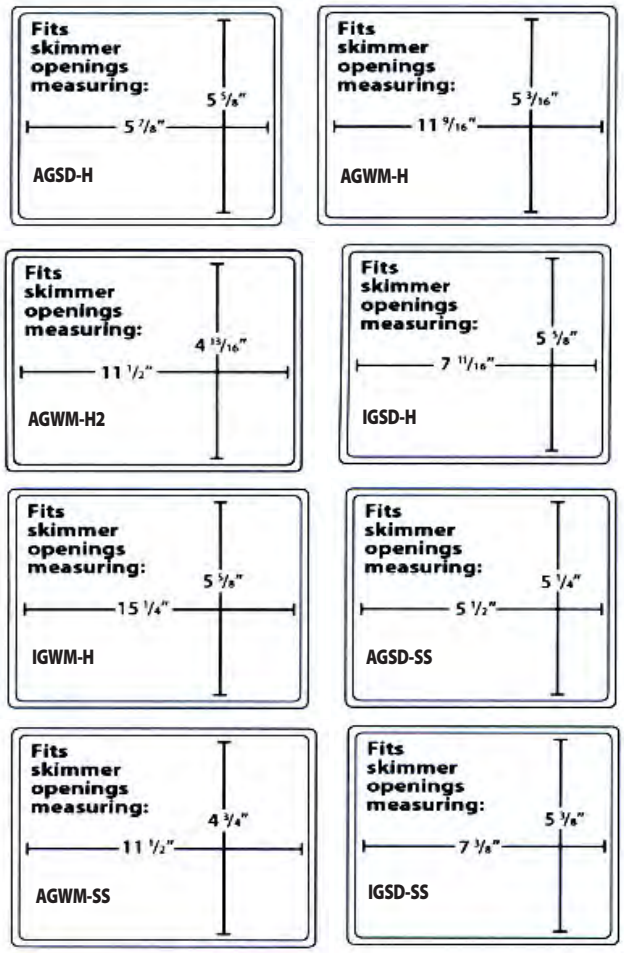

Skimmer Plugs

- Easy to install!
- Eliminates costly "drain down" for winterizing
- Protects skimmer from winter freeze up
- Makes filter & plumbing repair a snap
- Saves valuable treated pool water
- Rovaseal™ material creates air-tight seal
- 24 Per Case

SAVE 10% on case orders!

		Plugs for Skimmers with OEM Faceplate	
	SMP70360	AGSD-H	Fits most standard 6" AG skimmers - SP1090, 1091LX, 1092 and Aquador 1090
	SMP82580D0	AGWM-H	Fits various widemouth AG skimmers - SP1090WM, 1095, Hercules, Jacuzzi, Olympic, Sta Rite and Aquador 1010
	SMP8600100	AGWM-H2	Fits various widemouth AG skimmers - SP1091WM and similar sized openings
	SMP990160000	IGSD-H	Fits most standard 8" IG skimmers - SP1084, SP1089, Kafko, Pentair, Waterway, Sta Rite and Aquador 108
	SMP990300000	IGWM-H	Fits most widemouth IG skimmers - SP1085, Kafko, American Products and Aquador 1085
		Plugs for Skimmers with Skimsaver Faceplate	
	SMP80650	AGSD-SS	Fits the AG100 - can be used in place of AGL100
	SMP990210000	IGSD-SS	Fits the IG200 - can be used in place of IGL200
	SMP990310000	IGWM-SS	Fits the IG250 - can be used in place of IGL250

QUALITY POOL SUPPLY

Code	New Product Number	Old Product Number	Description
HAYWARD		**Skimmer Parts**	
		SP1082, SP1083, SP1084, SP1085 & 1086 Skimmers	
	AEQB152	B-152	Basket (Replaces SPX1082CA) 6.5" O.D. Bottom x 5" Deep
	HPPSPX1082CA	SPX1082CA	OEM Basket with Handle
	HPPSPX1082N2	SPX1082N2	Handle for SPX1082CA Basket
	HPPSPX1082E	SPX1082E	Cover (Square) - White
	HPPSPX1082Z1	SPX1082Z1	Cover Screw for Square Cover
	HPPSPX1082F	SPX1082F	Adjusting Collar for Square Cover
	HPPSPX1084R	SPX1084R	Cover (Round)
	HPPSPX1084Z9	SPX1084Z9	Cover Screw for Round Cover
	HPPSPX1084P	SPX1084P	Adjusting Collar with Brass Inserts
	HPPSP1084P1	SP1084P1	Extension Collar
	HPPSPX1082D	SPX1082D	Basket Support Ring
	HPPSPX1082K	SPX1082K	Weir
	HPPSPX1082H1A	SPX1082H1A	Side Plate with Screw
	HPPSPX1053Z1	SPX1053Z1	2" Pipe Plug
	HPPSPX1082Z2	SPX1082Z2	2" x 1½" Reducing Bushing
	HPPSPX1084L	SPX1084L	Face Plate for SP1084
	HPPSPX1085B	SPX1085B	Face Plate for SP1085
	AEQG113	G-113	Gasket for SP1084 (Replaces SPX1084B)
	AEQG157	G-157	Gasket for SP1085 (Replaces SPX1085D)
	HPPSPX1084C	SPX1084C	Spacer for SP1084
	HPPSPX1084Z4A	SPX1084Z4A	Face Plate Screw Set for SP1084

SPX1082CA

SPX1082E

SPX1082F

SPX1084P

SPX1082K

SPX1082Z2

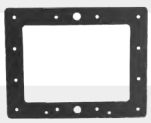
G-113

SPX1084C

All items cataloged are normally stocked unless noted.

Not Stocked ✻ While Supplies Last

HAYWARD

Skimmer Parts

SP1090, SP1090WM, & SP1092 Skimmers

Code	New Product Number	Old Product Number	Description
	HPPSPX1096CA	SPX1096CA	Basket 5 ⅛" O.D. Bottom x 3" Deep
	HPPSPX1096B	SPX1096B	Cover
	HPPSPX1096A2	SPX1096A2	Basket Support Ring
	HPPSPX1096K	SPX1096K	Weir
	HPPSPX1090D	SPX1090D	Face Plate
	HPPSPX1094GPAK2	SPX1094G	Gasket
CALL	HPPSPX1090GA	SPX1090GA	Throttle Plate with Screw
CALL	HPPSPX1090Z1A	SPX1090Z1A	Face Plate Screw Set
CALL	HPPSPX1030Z1C	SPX1030Z1C	Face Plate Screw Set - 1¼" (For SP1094SPA Only)
CALL	HPPSPX1092C	SPX1092C	Access Plug

SP1096, SP1097, & SP1098 Skimmers

Code	New Product Number	Old Product Number	Description
	HPPSPX1096B	SPX1096B	Skimmer Lid
	HPPSPX1096AX	SPX1096AX	Adjusting Collar
	HPPSPX1096CA	SPX1096CA	Basket 5⅛" O.D. Bottom x 3" Deep
	HPPSPX1096A2	SPX1096A2	Basket Support Ring
	HPPSPX1096K	SPX1096K	Weir
	HPPSPX1097D	SPX1097D	Face Plate for SP1097, SP1098
CALL	HPPSPX1090Z1A	SPX1090Z1A	Face Plate Screw Set
	AEQG155	G-155	Gasket for SP1097, 1098 (Replaces SPX0097E)
	AEQG115P	G-115P	Gasket (Replaces SPX1090E)

SP1094, SP1094SPA, SP1094H, & SP10950M Skimmers

Code	New Product Number	Old Product Number	Description
	AEQB203	B-203	Basket (Replaces SPX1094FA) 4¾" OD Bottom x 3" Deep
	HPPSPX1094FA	SPX1094FA	Basket 4¾" OD Bottom x 3" Deep
	HPPSPX1094K	SPX1094K	Weir
	HPPSPX1094B	SPX1094B	Face Plate
	HPPSPX1094GPAK2	SPX1094G	Gasket
CALL	HPPSPX1094C	SPX1094C	Cover
CALL	HPPSPX1030Z1C	SPX1030Z1C	Face Plate Screw Set - 1¼" (For SP1094SPA Only)
	HPPSPX1094R	SPX1094R	Face Plate Cover - Snap-on
CALL	HPPSPX1090Z1A	SPX1090Z1A	Face Plate Screw Set

QUALITY POOL SUPPLY

Code	New Product Number	Old Product Number	Description
HAYWARD		**Skimmer Parts**	
		SP1075, SP1075T, SP1076, & SP1077 Skimmers	
	AEQB152	B-152	Basket (Replaces SPX1082CA) 6.5" O.D. Bottom x 5" Deep
	MPO129X1	APCSKIM	1" Flat Head Stainless Screw
	MPO129X114	APCSKIML	1-1/4" Flat Head Stainless Screw - Long
	HPPSPX1082CA	SPX1082CA	OEM Basket with Handle
	HPPSPX1082N2	SPX1082N2	Handle for SPX1082CA Basket
	HPPSPX1075C1	SPX1075C1	Cover - White
	HPPSPX1084Z9	SPX1084Z9	Cover Screw
	HPPSPX1075B	SPX1075B	Adjusting Collar
	HPPSPX1082K	SPX1082K	Weir
	HPPSPX1075F	SPX1075F	Flo-Control Slide Plate w/Screw
	HPPSPX1075L	SPX1075L	Multi-Flo Valve Control for SP1075T
	HPPSPX1084L	SPX1084L	Face Plate for SP1076
	HPPSPX1085B	SPX1085B	Face Plate for SP1077
	AEQG113	G-113	Gasket for SP1076 (Replaces SPX1084B)
	AEQG157	G-157	Gasket for SP1077 (Replaces SPX1085D)
	HPPSPX1084Z4A	SPX1084Z4A	Face Plate Screw Set for SP1076 (Self-Tapping)
		SP1091WM and SP1091LX Skimmers	
	HPPSPX1091B	SPX1091B	Skimmer Cover
	HPPSPX1091C	SPX1091C	Basket with Handle
	HPPSPX1091K1	SPX1091K1	Weir
	HPPSPX1091D	SPX1091D	Face Plate Standard
	HPPSPX1091F	SPX1091F	Face Plate Widemouth
	HPPSPX1091G	SPX1091G	Gasket Standard, Butterfly
	HPPSPX1091GW	SPX1091GW	Gasket Widemouth, Butterfly

SPX1082CA

SPX1075C1

SPX1082K

SPX1075L

SPX1085B

SPX1091B

SPX1091C

SPX1091K1

SPX1091D

SPX1091F

SPX1091G

All items cataloged are normally stocked unless noted.

Not Stocked ✻ While Supplies Last

Code	New Product Number	Old Product Number	Description
PENTAIR		**Admiral Skimmer Parts**	
	AEQB37	B-37	Basket (Replaces 38013A)
	PEN38013B	38013B	Floating Weir
	PEN85001900	85001900	Vacuum Plate
	PEN85002300	85002300	Extension Collar
	PEN85007400	85007400	9" Snap On Lid for Existing Skimmers
	PEN85000600	85000600	Lid Ring Seat
	PEN85000300	85000300	Face Plate (10 hole-American Pattern)
	PEN85004200	85004200	Face Plate (12 hole-Standard Pattern)
	AEQG62P	G-62P	Gasket, face plate (replaces 85001600) (Each, 2 required)
	PEN85001500	85001500	Long Flap Weir
	MPO129X1	APCSKIM	1" Flat Head Stainless Screw
	MPO129X114	APCSKIML	1-¼" Flat Head Stainless Screw - Long
	PEN98203000	98203000	¾" Hi-Lo Flat Head Stainless Screw
	PEN98202600	98202600	¼" x 1" Flat Head Stainless Screw
	PEN98202700	98202700	¼" x 1¼" Flat Head Stainless Screw
	PEN98207100	98207100	¼" x ¾" Pilot Screw, Round Head Stainless
		FAS-100 Skimmer Parts	
	AEQB172	B-172	Basket (replaces 850039)
	PEN85003200	85003200	Cycolac Weir
	PEN85002800	85002800	Vac Plate
	PEN85004000	85004000	Face Plate
	AEQG234	G-234	Gasket, face plate (2 required) (replaces 85003300)
	PEN85004700	85004700	Lid
STA-RITE			
	PEN086500042	08650-0042	Vacuum Plate
	PEN086500079	08650-0079	Float Assembly
	CMP25526000000	25526	Extension collar (WC37-503P)
	PEN086500022	8650-0022	Hinged Weir Assembly
	PEN086500048	08650-0048	Equalizer Flap
	PEN086500169	08650-0169	Skimmer Lid & Frame

Swimquip U-3

All items cataloged are normally stocked unless noted.
Not Stocked ✻ While Supplies Last

QUALITY POOL SUPPLY

Renegade Builder Pack Parts

Code	New Product Number	Old Product Number	Description	
	WWP5196460WW	519-6460WW	Logo Lid Insert - White	545-8400; 545-8500
	WWP5196467WW	519-6467WW	Logo Lid Insert - Gray	545-8407; 545-8507
	WWP5199500	519-9500	Square Lid - White	545-8400; 545-8500
	WWP5199507	519-9507	Square Lid - Gray	545-8407; 545-8507
	WWP5423240	542-3240	Basket Assembly with Handle	All
	WWP5193250	519-3250	Basket Handle	All
	WWP5199510	519-9510	Square Collar - White	545-8400; 545-8500
	WWP5199517	519-9517	Square Collar - Gray	545-8407; 545-8507
	WWP5196560	519-6560	Extension Collar - White	545-8400; 545-8500
	WWP5196567	519-6567	Extension Collar - Gray	545-8407; 545-8507
✻	WWP5196570	519-6570	Mounting Ring Extension - White	545-8400; 545-8500
	WWP8196945	819-6945	Faceplate Screw	All
	WWP5199530	519-9530	Mounting Plate - Standard - White	545-8400
	WWP5199537	519-9537	Mounting Plate - Standard - Gray	545-8500
	WWP5199550	519-9550	Mounting Plate - Widemouth - White	545-8407
	WWP5199557	519-9557	Mounting Plate - Widemouth - Gray	545-8507
	WWP7119510	711-9510	Gasket - Standard (2 required)	545-8400; 545-8407
	WWP7119520	711-9520	Gasket - Widemouth (2 required)	545-8500; 545-8507
	WWP7139520	713-9520	Spacer (3 required)	All
	WWP5509657	550-9657	Weir Door Assembly - Gray	545-8407; 545-8507
	WWP5196480R1	519-6480	Vac Plate for Renegade - White	(2013 + Older)
	WWP5196480R1	519-6480-R1	“New" Vac Plate - White	(2014 + Newer)

All items cataloged are normally stocked unless noted.

Not Stocked ✻ While Supplies Last

Main Drain Parts

Code	New Product Number	Old Product Number		Description
	WWP6452150V	645-2150V	A	8" Anti-Vortex Cover - White (with screws)
	WWP6452157V	645-2157V	A	8" Anti-Vortex Cover - Gray (with screws)
	WWP81900051	819-00051	B	Cover Screws (Anti-Vortex only) (2 required)
	MPO129X1	APCSKIM	C	Mounting Screw (8 required)
	WWP6422090	642-2090	D	Vinyl Liner Main Drain Mounting Plate - White
	WWP6422097	642-2097	D	Vinyl Liner Main Drain Mounting Plate - Gray
	WWP8063000	806-3000	E	Gasket - Vinyl Liner Main Drain Assembly (1 required)
	WWP7112600	711-2600	F	Gasket - Vinyl Liner Main Drain Body (Stay-In-Place) (1 required)
	WWP6402310V	640-2310V	N/S	8" Anti-Entrapment Main Drain Cover & Frame - White

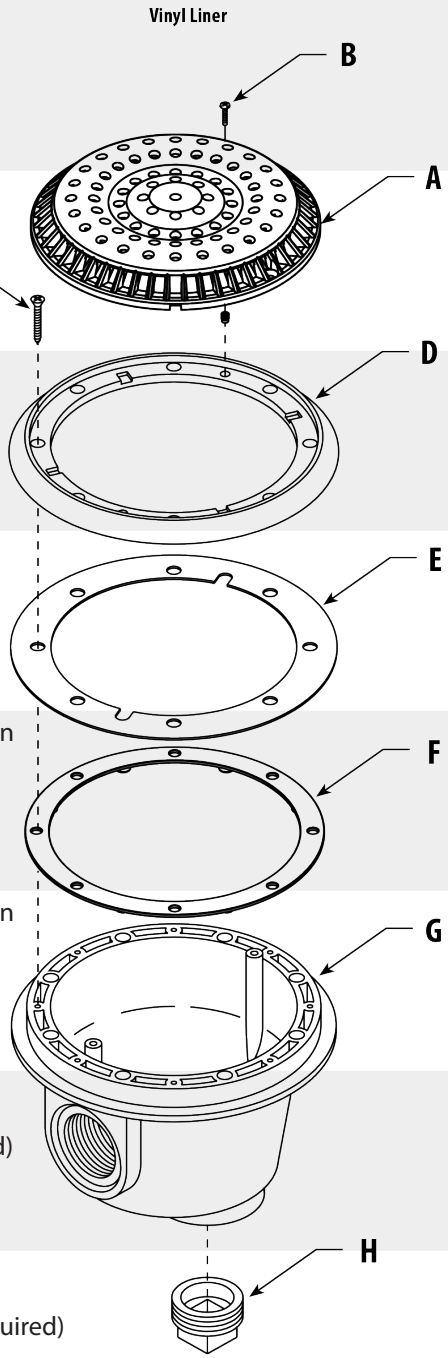

All items cataloged are normally stocked unless noted.
Not Stocked ✻ While Supplies Last

Code	New Product Number	Old Product Number	Description
		Main Drain Parts	25548-000-000
	CMP25548000000	25548-000-000	8" Galaxy Dome Cover & Frame (Set for Single Drain) (CMP) For Vinyl Liner, Does not include Gaskets or Ring Screws
	HPPWGX1048E	WGX1048E	8" Dome Cover - Concrete or Vinyl Liner (Hayward) Includes screws for Hayward sumps with and without metal inserts
	HPPWGX1048B	WGX1048B	Cover Sealing Ring with Brass Inserts (Hayward) For Vinyl Liner, Does not included Gaskets or Ring Screws
	HPPWG1030AVPAK2	WG1030AVPAK2	8" Diameter Cover and Frame (2-Pack) (Hayward) For Concrete (Plaster Ring not Included)
	HPPWG1051X	WG1051X	Adjustable Plaster Collar WG1051X
	HPPWGX1030Z2AM	WGX1030Z2AM	Screw Set to attach Dome Lid to Frame/Ring
	AQPAPCG3017	G-112P	Gasket (2 required) (SPX1048D) 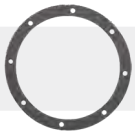 G-112P
	MPO129X1	APCSKIM	1" Flat Head Stainless Screw
	MPO129X114	APCSKIML	1-1/4" Flat Head Stainless Screw - Long
		Return Parts	
		SP1408	
	HPPSPX1408B	SPX1408B	Face Plate - Unthreaded SPX1408B
	AQPAPCG3144	G-226	Rubber Gasket (Replaces SPX1408C) (4 pre-drilled screw holes)
	HPPSPX1407D	SPX1407D	Locknut Spacer
		SP1023	
	AQPAPCG3419	G-89	Fiber Gasket - no holes, 2 required
	HPPSPX0023Z12	SPX0023Z12	Gasket - no holes, 2 required SPX0023Z12
	HPPSPX0023Z2	SPX0023Z2	Friction Ring
	HPPSPX1023B	SPX1023B	ABS Locknut
	HPPSPX1023Z3	SPX1023Z3	Fiber Slip Washer
		SP1411 & SP14071	
	AEQG88	G-88	Gasket - 4 holes, 2 required (Replaces SPX1411Z12) 25546
	CMP25546000000	25546	ABS Face Plate - 4 holes, threaded (Replaces SPX1411B) (CMP)

All items cataloged are normally stocked unless noted.

Not Stocked ✻ While Supplies Last

INDEX

Aqua Creek Lifts 473
Bonding 466
First Aid Kits 471
Global Lifts 472
Pool Alarms..... 467
Rope 468
Rope Eyes & Hooks.....469
Safety Floats 468
Safety Signs 470
Vacuum Release..... 466

QUALITY POOL SUPPLY

Code	New Product Number	Old Product Number	Description
			Vacuum Release - SVRS • All mechanical, non-electrical design • 3 year limited warranty • Vertical tee mount into suction line • Maintains approximately 30% flow if tripped • 1½" Threads www.Vac-Alert.com
CALL	VAIVA2000L	VA-2000L	SVRS for applications where the pump is at or above the pool water surface level
	VAIVA2000S	VA-2000S	SVRS for applications where the pump is below the pool water surface level
			Bonding Products All items require solid copper wire, not smaller than No. 8 AWG (not included)
			Perma-Cast
	PMCPBAG	PB-AG	PoolBond Above Ground Installs Under Strainer Basket
	PMCPBSK15	PB-SK-15	PoolBond Inground Installs in 1½" skimmer drain plug
	PMCPBSK20	PB-SK-20	Installs in 2" skimmer drain plug
	PMCPB2008	PB-2008	PoolBond 1" MPT Bronze For 1.5" plumbing, use with 402-211 tee (1.5" S X 1.5"S X 1"FPT) For 2" plumbing, use with 402-249 tee (2"S X 2"S X 1"FPT) **Install fitting at least 3" below water level to assure the fitting is contained in the pool water even when equipment is shut down.**
			Bond Safe 680 Stainless Steel - Mounts to skimmer sidewall
	JPIBS680IG	BS680IG	Inground Pools
	JPIBS680AG	BS680AG	Above Ground Pools

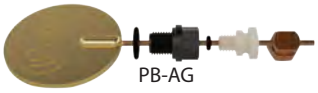
PB-AG

PB-SK-15

PB-2008

All items cataloged are normally stocked unless noted.

Not Stocked ✻ While Supplies Last

poolguard®

Pool Alarms

Code	New Product Number	Old Product Number	Description
	PBMPGRM2	PGRM-2	**Inground Pool Alarm** Includes an in-house remote receiver which will sound alarm both in-house and at the pool at the same time. The range of the remote receiver is up to 200 feet from the pool alarm. Activated with an on/off key. Can be used with a solar blanket but the alarm must be removed while swimming. Completely portable. 9V battery lasts about one year and has audible low battery indicator. Alarm resets after 5 minutes of alarming. Meets ASTM standards. Three year warranty.
	PBMDAPT2	DAPT-2	**Door Alarm** - 7 Second Delay Alarm is always on—no on/off switch. Alarm sounds in 7 seconds and will continue if door/window is left open. If closed, it will sound for 5 minutes then automatically reset. UL Listed and APSP Approved. One year warranty.
	PBMDAPTWT	DAPT-WT	**Instant Door Alarm** Same as DAPT-2 except alarm will sound instantly. Also included is a wireless transmitter so adults can enter from the outside without the alarm sounding. UL Listed and APSP Approved. Complies with all building codes. One year warranty.

QUALITY POOL SUPPLY

Code	New Product Number	Old Product Number	Description
		Rope	Blue & White Polypropylene
	MTLROPEBWT002	15848	¼" x 1200' Spool (Stocked in Clio Only)
	AMGPR506	15850	½" x 600' Spool
	AMGPR753	15852	¾" x 300' Spool
	AMGPR506	15850	½" per foot — Cut to Length
	AMGPR753	15852	¾" per foot — Cut to Length
		Safety Floats	
	PENR181016	R181016	3" x 5" for ½" rope
	PENR181086	R181086	5" x 9" for ¾" rope
	HRVIF5975	IF5975	5" x 9" Self-Locking for ¾" rope

PENTAIR

Safety Float Line Kits

3/8" Poly Rope with 3" x 5" Non-Sliding Floats, Rust Resistant Rope Hook and Fid for Adjusting Length of Line

			Pool Size	Floats
	PENR181226	R181226	16'	5
	PENR181216	R181216	18'	7
	PENR181206	R181206	20'	9

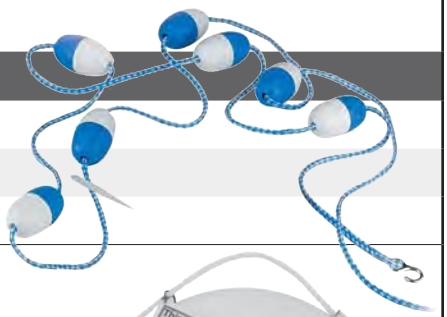

		Life Rings	
	JIMG19	G-19	19" White, Coast Guard Approved
	JIMG24	G-24	24" White, Coast Guard Approved
	JIM80030	800-30	30' Heaving Line with Bracket
	JIM80060	800-60	60' Heaving Line with Bracket
	PENR221026	R221026	Safety Hook/Pole Blue Aluminum Safety Hook (Do not attach to telescoping poles)
	PENR221166	R221166	Brass bolt & wing nut (Set of 6) Mounting hardware for safety hook (required, sold separately)
	PENR191106	R191106	12' One-piece straight pole with vinyl grip

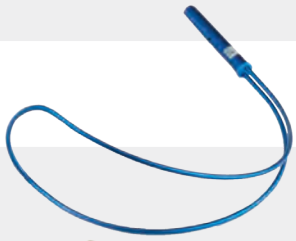

All items cataloged are normally stocked unless noted.

Not Stocked ✻ While Supplies Last

Code	New Product Number	Old Product Number	Description
		Rope Eyes	The "QP" line of rope eyes are designed with high tensile nylon. With no metal parts inside the pool, this design prevents electric shock if the bonding of the pool is broken. A really great safety feature!
		For Vinyl & Fiberglass Pools	
	CMP25568300000	QP-10	Removable Rope Eye - white - for use with steel wall or polymer wall pools. (sold individually) 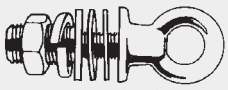
	CMP25568300110	QP-40	Rope Eye with Brass bolt/stud 1/2" female threads, white (sold individually)
	MPOQP308	QP-308	White Rope Eye Gasket (USDA Nitrile)
	PMCPI70	PI-70	For 1/2" rope, (package of two) Chrome plated brass with curved back to attach to coping
	PMCPI76	PI-76	Same as above, except flat backed (package of two)
		For Concrete Pools	
	CMP25568000000	542044	Recessed cup anchor with Stainless Bar 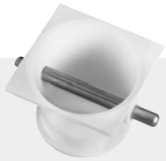
		Rope Hooks (Priced Each - Not By The Set)	
	PMCPH55	PH55	⅜" or ½" Hook (chrome/brass) Note: requires clamp for fastening rope
	PMCPH57	PH57	⅜" Rope Clamp (chrome/brass)
	PMCPH58	PH58	½" Rope Clamp (chrome/brass)
	MPOQP100	QP-100	For ¾" rope (white/polypropylene)
	PMCPH52	PH52	For ½" rope (chrome/brass)
	PMCPH53	PH53	For ¾" rope (chrome/brass)

All items cataloged are normally stocked unless noted.

Not Stocked ✻ While Supplies Last

QUALITY POOL SUPPLY

Code	New Product Number	Old Product Number	Description

No Diving Coping Labels

These vinyl labels attach to smooth or textured coping

NDL-3

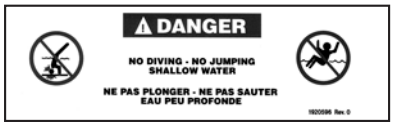

NDL-4

NDL-5

✻	CINNDL2	NDL-2	No Diving Label (for diving type pools) 3" x 11"
	GLINDL3	NDL-3	Danger / Shallow Water / No Diving Label 3" x 11"
	GLINDL4	NDL-4	Danger / Shallow Water / No Diving Label with French Text 3" x 11"
	LAHNDL5	NDL-5	Danger / Shallow Water - No Diving Label 2-7/8" x 16-1/4"

INLAYS INC.

Depth and Safety Markers

Stocked in Waterford Only

	INYV621500	V621500	"NO DIVE" Stick-On Vinyl Marker 6" x 6"
	INYV620030	V620030	"3 FT" Stick-On Vinyl Marker 6" x 6
	INYV620040	V620040	"4 FT" Stick-On Vinyl Marker 6" x 6"

Safety Signs

	NASSW29	230600	Shallow Water - No Diving Allowed	18" x 24"
	NASSW10	230500	Warning - No Lifeguard On Duty	18" x 24"
	NAS230300	230300	Caution - Spa Rules	18" x 24"
	NASSW2	230400	Pool Rules	18" x 24"
	NASSW15	230900	Pool Capacity	12" x 18"
	NASSW16	231000	Spa Capacity	12" x 18"
	NASSW14	232300	Emergency Telephone Location Sign	12" x 18"
	NAS1218OH	1218PC	Danger Pool Closed (meets Ohio regulations)	12" x 18"
	NASSW8	231700	Emergency 911	12" x 18"

All items cataloged are normally stocked unless noted.

Not Stocked ✻ While Supplies Last

Code	New Product Number	Old Product Number	Description
		First Aid Kits	
	MTL2425	2425	**181 Piece Comprehensive All-purpose Kit** Extra large and wall mountable. First aid guide, scissors, thermometer, gloves, wide array of bandages, trauma pad, conform gauze, compresses, antiseptics, ointments, and three over the counter pain medications.
	PCH12041	12-041	**Blood Borne Pathogens Response Kit** Case contains gown, gloves, face mask with eye shield, and body fluid clean-up supplies, all packaged in heat sealed bags
MORRISON MEDICAL		**Spineboard**	
	MOR3070	3070	Plastic Backboard - With Pins - Blue | 16" x 72" x 1¾" Thick 700 lb. capacity, straps not included. Check with your local fire department's protocol to determine the number of straps needed (sold separately) 3070
	MOR1311	1311	7' Strap with Swivel Speed Clip 2-piece polypropylene strap with metal push button buckle (3 straps needed per board)
	MOR1359	1359	9' One Piece Strap polypropylene webbing with plastic 2-piece side release buckle
	MORHI	HI	Head Immobilizer (Disposable Foam)
	MOR1429BL	1429BL	Deluxe Head Immobilizer

All items cataloged are normally stocked unless noted.

Not Stocked ✻ While Supplies Last

Code	New Product Number	Old Product Number	Description
			ADA Lifts All Models on this page include the following: • Anchors • UV Resistant Coating • Battery Powered 24-Volt System with Charging Station
	GPPS350SA	S350SA	**Superior Series Lift S-350** 350 lbs Lift Capacity 5-Year Structural Warranty Fits most standard pool applications Right Seat Application
	GPPP375SL	P375SL	**Proformance Series Lift P-375** 375 lbs Lift Capacity Lifetime Structural Warranty Fits most standard pool applications Emergency Return System (patent pending) Right Seat
	GPPR375RA	R375RA	**Rotational Series Lift R-375** 375 lb Lift Capacity Lifetime Structural Warranty Clears obstacles up to 10" tall Rotates both right and left by 360-degrees Works with most existing anchors 1.9" x 6" deep Adapter to fit other anchors (optional) Key Lock-Out System (Patent Pending)
◆	GPPR450ASL	R450ASL	**Rotational Series Lift R-450A** 450 lb Lift Capacity Lifetime Structural Warranty Stainless Steel Construction User-Friendly Controls Safety Seat Belt UPS Packaging for Easy Shipping Key Lock-Out System (Patent Pending) Rotates both right and left by 90-degrees R-450a is designed for above ground swimming pools that are 19" to 48" above deck height
	GPPR450RSL	R450RSL	**Rotational Series Lift R-450R** R-450R is designed to extend up to 35 inches over a gutter to place the user comfortably in the water From deck height, this unit will clear up to an 18-inch obstacle

All items cataloged are normally stocked unless noted.

Not Stocked ✻ While Supplies Last

Code	New Product Number	Old Product Number	Description

ADA Lifts

Key Lock-Out System is designed to lock the system out with the turn of a key when the unit is not in or intended to be in use.

Emergency Return System is designed to connect the power source directly to the actuator. In the event the handset and or controls malfunction, it will safely return the stranded user to the up position and out of the water.

Standard Features

- Stainless Steel Construction, UV Resistant
- Powder Coat Finish
- Battery Powered 24 volt system
- User Friendly Controls
- Lifetime Structural Warranty
- Arm Rests, Foot Rest, Safety Seat Belt
- Right Seat Position
- UPS Packaging for easy shipping
- Fits most standard pool applications
- Includes Battery Charging Station

	GPPC375NA	C375NA	Commercial Series Lift C-375 (375 lb. capacity) - no anchor ***Select Anchor Option Below***
	GPPC450NA	C450NA	Commercial Series Lift C-450 (450 lb. capacity) - no anchor ***Select Anchor Option Below***

Additional Items for Commercial Series

	GPPCGLCPK	CGLCPK	Portable Kit
	GPPGLCRFA	GLCRFA	C-Series Retrov Fit Anchor
	GPPGLCTPA	GLCTPA	C-Series Tri Point Anchor

CGLCPK

GLCRFA

GLCTPA

ADA Lift Accessories

✻	ACPF433PP4A	F-433PP4A	Standard anchor for Pro Pool or Ranger Lift - Original Style
✻	ACPF004PLBAP	F-004PLBAP	Pro Pool and Ranger upgrade accessory pack
✻	ACPF2PRAP	F-2PRAP	Rebel Portable Lift upgrade accessory pack

All items cataloged are normally stocked unless noted.
Not Stocked ✻ While Supplies Last

QUALITY POOL SUPPLY

NOTES

All items cataloged are normally stocked unless noted.

Not Stocked ✻ While Supplies Last

INDEX

Boeshield 482
Boss Products 484
ChemLink 484
Concrete Repairs 483
Duct Tape & Stop Leak 482
Equipment Pads 476
Kelley/Olympic Paint 477
Lube Products 482
Pool Liner Vacuums 476
Pool Putty & Paste 483
Ramuc Paint 479
Sikaflex 484
Vinyl Repair 481

QUALITY POOL SUPPLY

Code	New Product Number	Old Product Number	Description
Nemo® POWER TOOLS		**Under Water Drill**	
CALL	HOSNEMOSW	NEMOSW	- Safe for Salt Pools - 2 Speeds - Cordless - Submersion Depth 164 ft. - Durable Carrying Case - Includes 18V 6Ah Lithium Ion Batteries
GLI Pool Products		**Pool Liner Vacuums**	
	GLI843398111213	GLI-VAC	GLI G20 Liner Vacuum with Tube - 20% more vacuum suction than current market leader - Vibration and shock absorbing rubber mounts for stability - Able to work in both step areas & deep end - Integrated handle for easy carrying - Quiet Performance - 84 Db - 1 year warranty
Air Supply of the Future, Inc.		**Pool Liner Vacuums**	
	ASU14128100P	4128100	Cyclone Liner Vacuum - 3 HP, 120V - 1 year warranty - 140 CFM open flow and 180 inches of sealed pressure - Can also be used for winterizing pools - Requires liner vac tube listed below
	ASU1440456	1440456	Cyclone Vacuum Tube
	MPOQTUBE	Q-TUBE	Q-VAC Replacement Flexible Tube
		Equipment Pads	2" Thick - Lightweight Polypropylene - Drillable
	DVTEL24362	EP2436	24" x 36"
	DVTEL36482	EP3648	36" x 48"

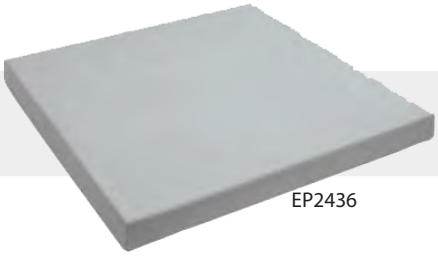
EP2436

NOTE: Equipment Pads are for use under pool pumps, chlorinators, and filters.
They can also be used under all current heater and heat pumps offered by Quality Pool Supply.
(These equipment pads should not be used with some older style heaters.)

All items cataloged are normally stocked unless noted.

Not Stocked ✻ While Supplies Last

Code	New Product Number	Old Product Number	Description

Olympic
KelleyTechnical Coatings
www.kelleytech.com
For color comparison, application procedures, and technical bulletins.

Epoxy Paint

All paint products listed are gallons except as noted.

Blue Ice | Bikini Blue | Blue Mist

For special order paint:

Add $50.00 per order for setup in addition to shipping charges.

Physical Sample needed to ensure color match.

Poxolon 2

Poxolon 2
225 - 250 sq. ft. per gallon
(requires two coats)

	OPA2222GAL	2222	White
	OPA2225GAL	2225	Blue Ice
	OPA2226GAL	2226	Black
	OPA2228GAL	2228	Bikini Blue
	OPA2231GAL	2231	Blue Mist
	OPA2211GAL	2211	Spanish Blue
	OPA2212GAL	2212	Viking Blue (for designs & murals)
	OPA2212Q	2212Q	Viking Blue - Quart

Zeron

Zeron
125 - 175 sq. ft. per gallon

	OPA390GAL	390	White
	OPA391GAL	391	Blue Ice
	OPA392GAL	392	Bikini Blue
	OPA395GAL	395	Blue Mist

Note: Zeron may be used with Gunzite primer to paint slide runways.
Call for more information, special colors, and special sizes.

Epoxy Solvent & Primers

	OPA1109GAL	1109	Epoxy Solvent (6 gal. per case)
	OPA216GAL	216	Gunzite Primer (100-150 Sq. Feet)
	OPA214GAL	214	Poxoprime II (water based) (Avg. 175-250 Sq. feet)
	OPA220GAL	220	Galvanized Steel Primer

All items cataloged are normally stocked unless noted.
Not Stocked ✻ While Supplies Last

QUALITY POOL SUPPLY

Code	New Product Number	Old Product Number	Description

Olympic

All paint products listed are gallons except as noted.

Paralon 2 - Chlorinated Rubber

One gallon covers approximately 250 square feet.

*Not Stocked in Akron or Waterford.
Can be transferred at no additional charge.

For special order paint:

Add $50.00 per order for setup in addition to shipping charges.

Physical Sample needed to ensure color match.

	OPA290GAL	290	White
	OPA291GAL	291	Blue Ice
	OPA292GAL	292	Bikini Blue
	OPA296GAL	296	Blue Mist
	OPA297GAL	297	Black

Fusion Plus

One gallon covers approximately 225-250 square feet.

	OPA260GAL	260	**Conversion Coating** For converting rubber based pools to epoxy.

Patio Tones

Conceals Deck Repair.
Acrylic Base Paint with safe, slip-resistant finish.

	OPA465WGAL	465	Sand Valley
	OPA469WGAL	469	Champagne

Rubber Base Solvent

One gallon covers approximately 90-125 square feet.

	OPA1108GAL	1108	Rubber Base Solvent (6 gal. per case) For both Chlorinated and Synthetic rubber base paint.

All items cataloged are normally stocked unless noted.

Not Stocked ✻ While Supplies Last

Code	New Product Number	Old Product Number	Description
			Olympic
			Painting Accessories
	OPA245GAL	245	**Prep Magic One-Step Cleaning Solution**, Gallon
	OPAX87009	X87009	**9" Roller Nap** for Epoxy, 7/16" (12 per case)
	OPA910GAL	910	**Pool Washing Compound**, Gallon (Tri-sodium-phosphate)
	OPAU100	U-100	**Diving Board Paint Kit** - a skidproof epoxy enamel
	OPA950GAL	950	**Permaseal 10.5 oz.** long-life nitrile rubber joint sealer (24 per case)
	OPA962GAL	962	**Poxofill Epoxy** - Putty for large cracks, pits, holes, etc. Can be used for permanent patching of concrete for a strong, lasting bond. Also for anchoring diving boards, ladders and resetting tile.
			RAMUC®
			Swimming Pool Paints
			Stocked In Byron Center Location Only. All paint is stocked in White and Dawn Blue. Special order colors available at slightly higher cost.
	RAM9622311	9622311	**White RAMUC Type A-2** Premium rubber pool paint designed for concrete, plaster,and previously painted chlorinated and synthetic rubber surfaces, VOC compliant.
	RAM9622328	9622328	**Dawn Blue RAMUC Type A-2** Premium rubber pool paint designed for concrete, plaster,and previously painted chlorinated and synthetic rubber surfaces, VOC compliant.
	RAM930601	930601	**Clean & Prep Solution** • Cleans, degreases, & etches surface prior to painting • Biodegradable - safe to use near plants and grass

All items cataloged are normally stocked unless noted.
Not Stocked ✻ While Supplies Last

QUALITY POOL SUPPLY

NOTES

Vinyl Repair & Adhesives

All Boxer vinyl repair kits & adhesives work under water

Code	New Product Number	Old Product Number	Description
	BXA759	759B	**Mini Carded Repair Kit** 42 sq. in. of clear vinyl with 1 oz. tube of adhesive, 24/case
	BXA859	859B	**Small Boxed Repair Kit** 130 sq. in. of clear vinyl with 2 oz. tube of adhesive, 24/case FREE DISPLAY BOX WITH CASE PURCHASE
	BXA110	110B	**Large Boxed Repair Kit** 500 sq. in. of clear vinyl with 4 oz. tube of adhesive, 24/case
	ULI704B	704B	**Vinyl Adhesive** 4 oz. can with applicator cap Contains Methyl Ethyl Ketone (MEK)
	ULI716B	716B	**Vinyl Adhesive** 16 oz. can with applicator cap Contains Methyl Ethyl Ketone (MEK)
	BXA116	116B	**Vinyl Adhesive** 16 oz. can with applicator cap. Contains Cyclohexanone, slower "drying" (even under water) for slightly stronger bond. (Stocked in Clio only)
	BXA557	557B	**One-Drop Vinyl Repair Kit - Toy Repair Kit** 1 oz. adhesive, 40 sq. inches of vinyl (carded). Seals pinholes in inflatable's without using patch material. Vinyl included for larger repairs.
	BXA30	30B	Self-Adhesive Clear Pool Patch (works underwater) 45 sq. in.
	BXA10	10B	Self-Adhesive Clear Pool Patch (works underwater) 100 sq. in.
	BXA20	20B	2 pieces of white 20 gauge vinyl—260 sq. in.
	BXA24	24B	2 pieces of blue 20 gauge vinyl—260 sq. in.
	BXA25	25B	2 pieces of frosty-clear 12 gauge vinyl—260 sq. in.
	BXA26	26B	2 pieces of frosty-clear 20 gauge vinyl—260 sq. in.
	DVTFP36	FP-36	**"Flexi-Patch"** fiberglass reinforced self-adhesive repair patch 3" x 6" (Bonds to all surfaces except Polypropylene)
	DVT89DC	89DC	**Inspection UV Pocket Light** with Rotating Magnetic Clip

759B

110B

716B & 704B

116B

557B

FP-36

89DC

All items cataloged are normally stocked unless noted.
Not Stocked ✻ While Supplies Last

QUALITY POOL SUPPLY

Code	New Product Number	Old Product Number	Description
			Leak Repair & Lubricants
	TAPDUCT	DT	**Duct Tape**, 2" x 60 Yards A special tape that contains no petroleum compounds that can bleed through vinyl liners. (10% Case Discount - 24/Case)
	AEQ630	630	**Magic Lube** Teflon based multi-purpose lubricant/sealant 1 oz. Tube, 25/case FREE DISPLAY BOX WITH CASE PURCHASE
	AEQ631	631	**Magic Lube** 5 oz. Tube, 50/case
	AEQ651	#651	**Magic Lube II Silicone** 5 oz. Tube Silicone-based multi-purpose lubricant/sealant
	HPPSPX0710Z9	SPX0710Z9	**3M Rubber Adhesive** - 5 oz. For main drain, multi port valve gaskets, etc.
	HPPSPX0327	SPX0327	**Hayward Jack's Formula 327 Lube** (1 oz. Tube)
	LZAZJ	LT87	**Leisure Time LEAK Seal** - 32 oz. Add directly to water without dilution to seal minor leaks in spa surfaces and plumbing.
	PENSL	SL	**STOP LEAK** - 32 oz. Seals minor leaks in pool or spa surfaces and plumbing.
	BOET90001	T90001	**Boeshield T-9®** Liquid Drip Bottle - 1oz. Provides superior corrosion protection, waterproof lubrication, and moisture displacement. Safe for metal, plastics and vinyl.
	BOET90004	T90004	**Boeshield T-9®** Aerosol Can - 4 oz.
	BOET90012	T90012	**Boeshield T-9®** Aerosol Can - 12 oz.
	BOERF0004	RF0004	**RUSTFREE™** Spray - 4 oz. Quickly removes rust, corrosion and stains from any surface, including: steel, cast iron, stainless, fiberglass, chrome, tile, porcelain, vinyl, and more.
	BOERF0008	RF0008	**RUSTFREE™** Spray - 8 oz.

All items cataloged are normally stocked unless noted.

Not Stocked ✻ While Supplies Last

Code	New Product Number	Old Product Number	Description
			Two-Part Epoxy Adhesives
	ATL530318	530318	**Pool Putty - White** 14 oz. Each (7 oz. Resin & 8 oz. Hardener tubes) Used for stopping leaks & repairing concrete/gunite. Can be used under water.
			14 oz. - Display Box of 5
	ATL530337	530337	**Pool Paste - White** 16 oz. Each (8 oz. Resin & 8 oz. Hardener Cans) Ideal for replacing tiles, cracked skimmers and baskets; replacing nonskid strips, repairing broken or cracked vacuum brushes and accessories, and mending hairline cracks in plastic pipe, concrete, fiberglass and wood. Cannot be applied underwater.
	OPA962GAL	962	**Poxofill Patching Compound** 1 Gallon Can repair holes, depressions, ruts, and cracks in concrete/gunite pool surfaces, repair concrete expansion joints and broken concrete around underwater lights, drains, etc. Can be used underwater.
	HPPECX1308	ECX1308	**Schmear Repair- Ground ABS Resin Pellets** Can be mixed with MEK or PVC Primer (sold separately) to repair cracked ABS products.

			EZ-Patch® 1 F.S. Plaster Repair Powder White, but can be tinted with cement-type dye. This fast-set mixture sets up in minutes and can be used for repairs both below and above water. Special order products are available for Pebble, Quartz, and Glass Bead plaster repair: e-zpatch.com.
	EZPEZP006	EZP-006	3 lb. - Covers 1 sq. ft. at ⅜" Deep.
	EZPEZP007	EZP-007	10 lb. - Covers 3 sq. ft. at ⅜" Deep.

All items cataloged are normally stocked unless noted.
Not Stocked ✻ While Supplies Last

QUALITY POOL SUPPLY

Code	New Product Number	Old Product Number	Description
			Adhesives/Sealants
			ChemLink M-1 Polyether Adhesive/Sealant Tack free in 35 minutes. 370 PSI tensile strength, moisture-cure, non-slump, low odor, can be applied at temperatures as low as 32°F, paintable within 24 hours, adheres to a variety of substrates. Please note: not to be used in areas subject to continuous immersion.
	CLKF1277WH	F1277WH	5 oz. - Tube - White
	CLKF1270WH	F1270WH	10.1 oz. Cartridge - White
	CLKF1204WH	F1204WH	28 oz. Cartridge - White
			ChemLink NovaLink 35 Polyether Masonry Joint Sealant Tack free in 40 minutes. 140 PSI tensile strength, moisture-cure, non-slump, low odor, color-stable, can be applied at temperatures as low as 32°F, paintable within 24 hours, adheres to a variety of substrates. Please note: not to be used in areas subject to continuous immersion.
	CLKF1240ST	F1240ST	10.1 oz. Cartridge - Stone (light tan)
	CLKF1240GR	F1240GR	10.1 oz. Cartridge - Gray
			ChemLink NovaLink SL Polyether Masonry Joint Sealant Self-leveling, for use on horizontal surfaces only. Tack free in 30 minutes. 120 PSI tensile strength, moisture-cure, color-stable, can be applied at temperatures as low as 32°F, paintable within 24 hours, adheres to a variety of substrates. Please note: not to be used in areas subject to continuous immersion.
	CLKFS1234ST	F1234ST	10.1 oz. Cartridge - Stone (light tan)
		F1234GR	10.1 oz. Cartridge - Gray
			Boss 801 Silicone Adhesive/Sealant Tack free in 30 minutes. 201 PSI tensile strength, neutral cure, mildew/chlorine resistant, non-sag, low odor, waterproof, can be applied at temperatures as low as 35°F, adheres to a variety of substrates. Provides excellent seal and adhesion for jets, fitting, and tile. 12/case
	MTL80100B	80100C	10.3 oz. Cartridge - Clear
	MTL80101B	80101W	10.3 oz. Cartridge - White
			Sikaflex - 221 Adhesive/Sealant A polyurethane that cures on exposure to atmospheric humidity to form a durable elastomer. Non-sag and excellent adhesion for a wide range of uses. High levels of chlorine tend to decompose Sikaflex-221. (10% Case Discount - 24/Case)
	SIK022124190891	SikaW	10.1 oz. Cartridge - White

All items cataloged are normally stocked unless noted.

Not Stocked ✻ While Supplies Last

INDEX

Anodes 488
Ball Valves 489
Brass Gate Valves 488
Check Valves 490
Flanges & Flange Gaskets 496
Flowmeters 498
Pipe & Tubing 486
PVC Cement & Cleaner 499
PVC Fittings 500
Unions 492

QUALITY POOL SUPPLY

Code	New Product Number	Old Product Number	Description
		Schedule 40 PVC Pipe	NSF Approved for Potable Water
	BEP005SCH40X10	PVC005	½" x 10'
	BEP007SCH40X10	PVC007	¾" x 10'
	BEP010SCH40X10	PVC010	1" x 10'
	BEP012SCH40X10	PVC012	1¼" x 10'
	BEP015SCH40X10	PVC015	1½" x 10'
	BEP020SCH40X10	PVC020	2" x 10'
	BEP025SCH40X10	PVC025	2½" x 10'
	BEP030SCH40X10	PVC030	3" x 10'
	BEP040SCH40X10	PVC040	4" x 10'
	BEP060SCH40X10	PVC060	6" x 10'
		Flexible PVC Pipe	NSF Approved
	FXP005W	FPVC005	½" x 100' roll
	FXP007X50W	FPVC007	¾" x 50' roll
	FXP010X50W	FPVC010	1" x 50' roll
	FXP012X50W	FPVC012	1¼" x 50' roll
	NSQPS00000000016	FPVC015	1½" x 50' roll
	NSQPS00000000017	FPVC0151	1½" x 100' roll
	NSQPS00000000018	FPVC020	2"x 50' roll
	NSQPS00000000019	FPVC0201	2"x 100' roll
		Polyethylene Pipe	(100 lb. NSF Approved) *125 PSI unless noted | *not stocked in Akron
CALL	PEE007NSF100100	PP007	¾" x 100' roll
CALL	PEE010NSF100100	PP010	1" x 100' roll
CALL	PEE012NSF100100	PP012	1¼" x 100' roll (stocked in Waterford only)
CALL	PEE015NSF100100	PP015	1½" x 100' roll
CALL	PEE015NSF100250	PP0152	1½" x 250' roll
CALL	PEE020NSF100100	PP020	2" x 100' roll
CALL	PEE015AF10070	AFNSF15	1½" x 100' roll - 70 PSI (stocked in Waterford only)
		Tubing	
	FPICPVC007	CPVC007	By the Foot - ¾" x 50' Clear PVC
✻	FPICPVC012	CPVC012	By the Foot - 1¼" x 50' Clear PVC
	FPICPVC015	CPVC015	By the Foot - 1½" x 50' Clear PVC
	FPICPVC007	CPVC007	¾" x 50' Clear PVC (heavy duty) ¾" ID x 1" OD x ⅛" Wall (spa)
✻	FPICPVC012	CPVC012	1¼" x 50' Clear PVC (heavy duty) 1 ¼" ID x 1 ⅝" OD x 3/16" Wall
	FPICPVC015	CPVC015	1½" x 50' Clear PVC (heavy duty) 1 ½" ID x 1 ⅞" OD x 3/16" Wall
	AMGIV60621	IV6062-1	⅜" OD x ¼" ID x 100' Clear Vinyl
	AMGIV80621	IV8062-1	½" OD x ⅜" ID x 100' Clear Vinyl
	AMGMV40401	MV4040-1	¼" OD x 017 ID x 100' Opaque Polyethylene (slide tubing)
	AMGMV60621	MV6062-1	⅜" OD x ¼" ID x 100' Opaque Polyethylene
	AMGMV50621	MV5062-1	5/16" OD x 100' Opaque Polyethylene
	AMGMV80621	MV8062-1	½" OD x 100' Opaque Polyethylene

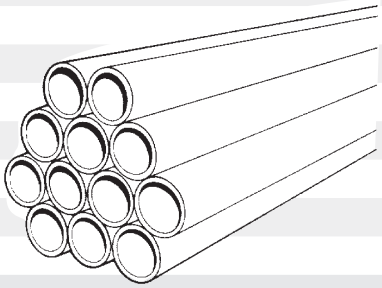

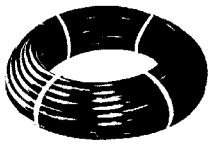

5 Rolls - Less 5%
10 Rolls - Less 10%
Add 25% for cut lengths

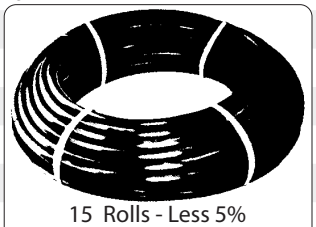

15 Rolls - Less 5%
30 Rolls - Less 10%

All items cataloged are normally stocked unless noted.

Not Stocked ✻ While Supplies Last

Code	New Product Number	Old Product Number	Description	
		Stainless Steel Clamps		
			Range	**Fits Polypipe Size**
	MUR4	MM-4SS	¼" - ⅝"	
	MUR5	MM-5SS	5/16" - ⅞"	⅝"
	MUR10	H-10SS	9/16" - 1 1/16"	¾"
	MUR16	H-16SS	¾" - 1½"	1"
	MUR20	H-20SS	13/16" - 1¾"	1¼"
	MUR24	H-24SS	1 1/16"- 2"	1¼", 1½"
	MUR32	H-32SS	1 9/16" - 2½"	2"
	MUR40	H-40SS	2 1/16" - 3"	2½"
	MUR52	H-52SS	2 13/16" - 3¾"	3"
✻	MUR80	H-80SS	4 9/16" - 5½"	
		Sealants		
	TAPTEF005	TT	½" x 520" Teflon Tape	
	TAPTEF007	SW520	¾" x 520" Teflon Tape	
	WHMTF16	TF16	Teflon Thread Sealant Paste - A soft set—white teflon pipe joint compound. For use on plastic, ABS and metal threaded systems carrying air, steam, petroleum, water, gas and many chemicals.	
		Gauges		
	AMGECX270861	PG60	60#	Pressure Gauge
	MRLPG100	PG100	100#	Pressure Gauge
	AMGIPVG3024L	VG30-A	30#	Vacuum Gauge
	AMGEIPPG6024BNL	155050	60#	Pressure Gauge - Backmount
	PEN190059	190059	60#	Pressure Gauge - Backmount
		Thermometers (½" Thread Size)		
	BAP608020000	9485	Straight	40-260°
	BAP608070000	9486	Angle	40-260°
	PENSL1DW	SL-1DW	Dial Type	30-130°

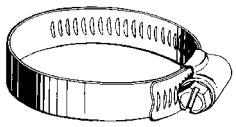

500 Clamps - Less 10%
1000 Clamps - Less 15%

9485

9486

SL-1DW

All items cataloged are normally stocked unless noted.
Not Stocked ✻ While Supplies Last

QUALITY POOL SUPPLY

Code	New Product Number	Old Product Number	Description		
		Flowmeter/Check Valve Combo			
	H2FFVSK	FV-SK	Service Repair Kit for FV-C and FV-C-15 Contains O-Ring, Flapper, Spring, and Pivot Pin		
	H2FFVC	FV-C	FlowVis for 2" and 2½" Pipe		
CALL	H2FFV15	FV-C-15	FlowVis for 1½" Pipe		
CALL	H2FFV3	FV-3	FlowVis for 3" Pipe		
CALL	H2FFV4	FV-4	FlowVis for 4" Pipe		
		Zinc Anodes Ideal for Salt Pools			
	PTC104D	PT104D	Inline Zinc Anode - 2" x 2" Tee (slip)		
	PTC104RKIT	PT104CR	Replacement Zinc Anode for PT104D		
	SSRANODE	ANODE	Sacrificial Anode – attaches to ladders, rails, etc.		
	PTC104A	PT104A	Basket Weight Anode (fastener included)		
		Brass Gate Valves *(Not for use with potable water)*			
✻	VLZGV007F	GV200-75T	¾"	Threaded	
✻	VLZGV010F	GV200-100T	1"	Threaded	
✻	VLZGV012F	GV200-125T	1¼"	Threaded	
	VLZGV015F	GV200-150T	1½"	Threaded	
	VLZGV020F	GV200-200T	2"	Threaded	
✻	VLZGV040F	GV200-400T	4"	Threaded	
✻	VLZBD005M	HBD50	½"	Boiler Drain, MIP/SMP	
✻	VLZBD007M	BD007	¾"	Boiler Drain, MIP	
	WWP4002070	400-2070	¾"	Slip x Male Garden Hose	On/Off Valve
	VLZBV015F	HFBV6-150T	1½"	Brass Ball Valve (American Granby)	
		Slide Valves			
	MPL010115	MPSV015	1 ½"	Slide Valve (Slip x Slip)	(Case of 12 - Less 5%)
	MPL010215	MPSV015-S	1 ½"	Slide Valve (Spigot x Spigot)	(Case of 12 - Less 5%)
	MPL010120	MPSV020	2"	Slide Valve (Slip x Slip)	(Case of 12 - Less 5%)
	CMP25856150000	MP0423-15	1 ½"	Slide Valve (Pool Hose x MIPT) (by CMP)	
	MPL008030101512	MP0080301015-12	1 ½"	Gasket	
	MPL008030102012	MP0080301020-12	2"	Gasket	
	MPL030515A	MP0305-15	1 ½"	External Valve Lock	
	MPL030520A	MP0305-20	2"	External Valve Lock	

FV-C

PT104D

ANODE

PT104A

GV200-150T

BD007

MPSV015

All items cataloged are normally stocked unless noted.

Not Stocked ✻ While Supplies Last

Code	New Product Number	Old Product Number	Description	
	American Granby	**Ball Valves**		
	VLPBV005S	EMIP50SE	½"	PVC Slip
	VLPBV007S	EMIP75SE	¾"	PVC Slip
	VLPBV010S	EMIP100SE	1"	PVC Slip
	VLPBV015S	EMIP150SE	1½"	PVC Slip
	NSQPS00000000011	EMIP200SE	2"	PVC Slip
	Jandy	**Ball Valves**		
	JND4724	4724	1½"	Slip CPVC 2-Way Neverlube
	JND4718	4718	2½-3"	Slip CPVC 2-Way Neverlube
	JNDBVSU015	BVSU015	1.5"	Grey PVC Heavy Duty, Single Union
	JNDBVSU020	BVSU020	2"	Grey PVC Heavy Duty, Single Union
	SPEARS	**Ball Valves** High Quality PVC - not ABS		
	SPRBV2422015W	2422-015W	1½"	Single Union, slip
	SPRBV2422020W	2422-020W	2"	Single Union, slip
	SPRBV3622015W	3622-015W	1½"	True Union, slip
	HAYWARD	**Ball Valves**		
	HPPSP0722	SP0722	Trimline 2-Way (ABS) - 1½" FIP	
	HPPSP0722S	SP0722S	Trimline 2-Way (PVC) - 1½" SKT	
	HPPSP0723	SP0723	Trimline 2-Way (ABS) - 1½" MIP x 1½" FIP	
	HPPSP0735	SP0735	Deluxe 4-Way (ABS) - 1½" FIP	
	HPPSP0729	SP0729	Econoline 2-Way (ABS) 1½" MIP x Hose Adapter	
	PRAHER PLASTICS	**Ball Valves**		
	PRA1500100	150-010	1½"	Single Union, Slip (6955)
	PRA150015	150-015	1½"	Single Union, MIP/FIP
	PRA200010	200-010	2"	Single Union, Slip (not pictured)
	PRABV61501PES	12-0097	1½"	Economy True Union Ball Valve
	PRABV62001PES	12-0119	2"	Economy True Union Ball Valve
	PRA151GMFT	151GMFT	1½"	Slide Valve MPT x FPT Black

EMIP150SE

BVSU015

2422-015W
3622-015W

SP0722S
SP0735
SP0729

150-010
12-0097
12-0119
151GMFT

All items cataloged are normally stocked unless noted.
Not Stocked ✻ While Supplies Last

Code	New Product Number	Old Product Number	Description
	PENTAIR	**Check Valves**	
	PENR172288	R172288	1-1/2" Socket x 2" Spigot PVC Corrosion Resistant 2 lb. Spring
	waterway	**Check Valves**	
	WWP6007010	600-7010	2" Slip / 2½" CPVC Spigot Straight Body, Swing Check Valve, Clear, removable lid. Internals can be removed for Winterizing. 2 lb. Spring
	SPEARS	**Check Valves**	
	SPRS158015	S1580-15	1½" PVC Slip (1011-15) ½ lb. Spring
	SPRS158015F	S1580-15F	1½" PVC FIP Threads (1001-15) ½ lb. Spring
	SPRS158020	S1580-20	2" PVC Slip (1011-20) ½ lb. Spring
	SPRS152015	S1520-15	1½" PVC Slip (swing check)
	SPRS152020	S1520-20	2" PVC Slip (swing check)
	SPRS152030	S1520-30	3" PVC Slip (swing check)
	PRAHER PLASTICS	**Check Valves**	
	PRA200CV500	200-CV-500	2" By-Pass check valve with 5 lb. spring
	MAGIC PLASTICS	**Check Valves**	
	MPL083015C	MP0830-15C	1½" Slip / 2" Spigot Compact Air Blower Check Valve with ¼" lb. spring (replaces 1050-20)
	CMP POOL PRODUCTS	**Check Valves**	
CALL	CMP25830200000	25830-200-000	CPVC Check Valve Threaded Lid 2" 2lb. Spring
	Jandy	**Check Valves**	
CALL	JND7235	7235	1.5" Socket x 2" Spigot CPVC Check Valve
	JND7305	7305	2" Socket x 2.5" Spigot CPVC Check Valve
	American Granby	**Check Valves**	
✻	VLZCV015F	HSCV150T	1½" Brass Swing Check Valve (FIP) (stocked in Waterford only)

All items cataloged are normally stocked unless noted.

Not Stocked ✻ While Supplies Last

Code	New Product Number	Old Product Number	Description
		Band-Seal Couplings	
	NHPCP015PK	CP-150	1½" PVC x 1½" PVC
	NHPCP020PK	CP-200	2" PVC x 2" PVC
	NHPCP251PP	CP-215	2" PVC x 1½" PVC

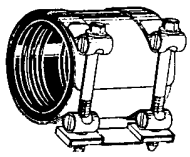
Stainless Steel Band
Neoprene Seal

		Pipe Repair Fittings	
		Pipe Extenders	
	MPL030105	MP0301-05	½"
	CMP21181750000	MP0301-07	¾"
	CMP21181100000	MP0301-10	1"
	CMP21181150000	MP0301-15	1½"
	CMP21181200000	MP0301-20	2"
	CMP21181300000	MP0301-30	3"
	CMP21181400000	MP0301-40	4"

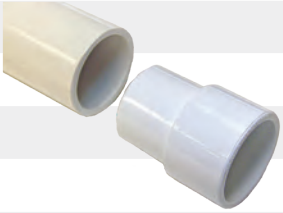

		MagicMend Insider Connectors	
	CMP21183100000	MP0302-10	1"
	CMP21183150000	MP0302-15	1½"
	CMP21183200000	MP0302-20	2"

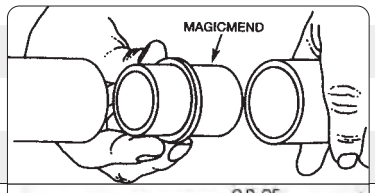

		MagicMend Extender Fitting	
	CMP21182150000	MP0303-15	1½"
	CMP21182200000	MP0303-20	2"

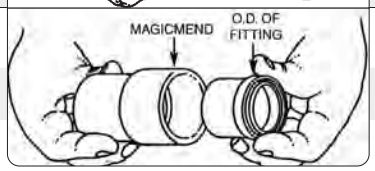

		Kwik Repair Fittings *Stocked in Waterford Only	
	DWNKRC429007	KRC429-007	Kwik Repair ¾" Coupler
	DWNKRC429010	KRC429-010	Kwik Repair 1" Coupler
	DWNCP015	KRC429-015	Kwik Repair 1½" Coupler

		Hayward Ball Valve Parts	
	HPPSPX0722F	SPX0722F	Handle only for "TRIMLINE" ball valve
	HPPSPX0735D	SPX0735D	Handle only for ball valve
	HPPSPX0735E	SPX0735E	Assembly Nut
	AQPAPCO2430	O-245	O-ring end Connector (SPX735H)
	HPPSPX0735P2	SPX0735P2	Teflon Ball Seal
	HPPSPX0722GH	SPX0722GH	Stem O-ring with end connector
	AQPAPCO2406	O-168	Stem O-ring only
	HPPSPX1495Z1	SPX1495Z1	O-ring for Flush Union

SP0722S

All items cataloged are normally stocked unless noted.
Not Stocked ✻ While Supplies Last

QUALITY POOL SUPPLY

PVC Unions

Code	New Product Number	Old Product Number	Description	Replacement O-ring
	MPOCSU678	CSU678	1½" slip x 1½" slip or 2" SPG (C&S Plastics)	O-49
	PRA150903	150-903	1½" SKT x MIP w/O-ring (Praher)	O-26 & O-287
	CMP21049150003	11-3440	1½" slip x 1½" slip or 2" SPG (Hydro-Air)	O-64
	PRA150906	150-906	High Temperature Union 1½" SKT x MIP w/O-ring (Praher)	O-26 & O-287
	PRA200906	200-906	High Temperature Union 2" SKT x MIP	O-370
	FLO160015	1600-15	1½" slip x 1½" slip or 2" SPG (Flo Control)	O-64
	AQPAF52272000	52272000	2" Half (Aqua-Flo)	O-43
	PRA200903	200-903	2" SKT x MIP with O-ring	O-370(2)
	MPOCSU199	CSU199	2" Slip (C&S Plastics)	

Waterway Unions

Code	New Product Number	Old Product Number	Description	Replacement O-ring
	WWP4005570	400-5570	2" Pump Union	805-0229
	WWP4005050	400-5050	2" Union, Complete	805-0229
	WWP4006000	400-6000	2½" Union, Complete	805-0232
	WWP4005990	400-5990	2½" x 2" Pump Union	805-0232
	WWP4002160	400-2160	1½" S or 2" SPG Self-aligning Union (Jacuzzi)	805-0228
	WWP4004230	400-4230	1½" FPT Pump Union	805-0226
	WWP4004300	400-4300	2" Pump Union, 45° ell	805-0229
	WWP4004060	400-4060	1½" Pump Union	805-0226

All items cataloged are normally stocked unless noted.

Not Stocked ✻ While Supplies Last

Code	New Product Number	Old Product Number	Description	Replacement O-ring
		PVC Unions		
	HPPSP1500UNPAK2	SP1500UNPAK2	Hayward pump unions, 1 1/2" Slip / 1 1/2" MBT	O-41
	HPPSP1500UNPAK2C	SP1500UNPAK2C	Hayward pump unions, 1 1/2" Slip / 2" SPG	O-41
	HPPSP1480BLK	SP1480BLK	Hayward Self-Aligning, Double Male, End Union 1 1/2"	
	HPPSP1493	SP1493	Hayward Econo-Union - 1 1/2" MIP x 1 1/2" Hose Barb	O-222
	S4PUN007	457-007	Spears 3/4" Slip Union	
	S4PUN010	457-010	Spears 1" Slip Union	

SP1500UNPAK2

SP1500UNPAK2C

SP1480BLK

SP1493

		Union Parts	
	WWP3193121	319-3121	Hayward union adapters, 1 1/2" FBT x 2" Male THD (add O-49 O-ring")
	AQPAF50100120	50100120	Aqua-Flo union adapters, mate 1 1/2" wet ends to 2" unions (add O-49 O-ring")
	WWP4006060	400-6060	Waterway union adapter, mates 2" wet ends to 2 1/2" unions (includes O-ring)
	WWP4005491	400-5491	1 1/2" Split union nut, used with flow thru heater tubes
	WWP4174090	417-4090	1 1/2" Tail piece, used with 400-5491 (add either O-125 O-ring or 711-4050 gasket)
	WWP4175160	417-5160	1 1/2" Tail piece X 2" Spg Buttress (replaces 417-5070)
	WWP4005161	400-5161	2" Split union nut, used with flow thru heater tubes
	WWP4175050	417-5050	2" Tail piece, used with 400-5161 (add either 805-0229 O-ring or 711-4030 gasket)
	MPL0121109015	MP0121109015	1 1/2" Split nut, replaces broken nuts on most 1 1/2" unions
	MPL0121109020	MP0121109020	2" Split nut, replaces broken nut on most 2" unions
	MPL0121109025	MP0121109025	2 1/2" Split nut, replaces broken nut on most 2 1/2" unions
✻	HOS893711017	89-371-1017	3" UniNut replacement nut for low flow "canister" heaters
✻	HOS893711055	89-371-1055	3" UniNut retainer
✻	HOS893711047	89-371-1047	2" UniNut retainer

All items cataloged are normally stocked unless noted.
Not Stocked ✻ While Supplies Last

QUALITY POOL SUPPLY

Code	New Product Number	Old Product Number	Description
		PVC Diverter Valves	
	PEN263037	263037	1 1/2" inside or 2" outside 3-way PVC *(Pentair)*
	PEN263038	263038	1 1/2" inside or 2" outside 2-way PVC Some locations may stock an equivalent model valve by Praher. *(Pentair)*
	PEN263027	263027	2 Way Valve 2" (2½" Slip Outside) CPVC *(Pentair)*
	PEN263028	263028	3 Way Valve 2" (2½" Slip Outside) PVC *(Pentair)*
	PEN263029	263029	2-way PVC 2" inside or 2 1/2" outside *(Pentair)*
	JND1157	1157	2-Port CPVC Valve 1 1/2" or 2" Positive Seal (Grey) *(Jandy)*
	PRAVF22010	VF2-2010	2-Port Valve 2" Slip /2.5" spg. *(Praher)*
	PRAOV31500	OV3-1500	3-Port CPVC Valve 1 1/2" or 2" Perma-Seal (Grey) Praher (replaces Jandy 1154) *(Praher)*
	JND4715	4715	3-Port Valve 1 1/2" or 2" Never-Lube™ Perma-Seal (Black) *(Jandy)*
CALL	JND4716	4716	2"-2.5" Positive Seal, 2 Port Never-Lube™ *(Jandy)*
	JND4717	4717	3-Port Valve 2" Never-Lube™ *(Jandy)*
	PRAOV32010	OV3-2010	3-Port CPVC Valve 2" or 2 1/2" Perma-seal Praher (Replaces Jandy 4717) *(Praher)*
		Valve Acutators	
	HPPGVA24	GVA-24	Valve Actuator - 24V *(Hayward)*
	ITMPE24VA	PE24VA	Valve Actuator - 24V *(Intermatic)*
	ITMPE24RSVA	PE24RSVA	Ready Set 24V Electronic Valve Acuator *(Intermatic)* *Stocked in Clio Only

All items cataloged are normally stocked unless noted.

Not Stocked ✻ While Supplies Last

Code	New Product Number	Old Product Number	Description
		Diverter Valve Parts	
	ZOD1132	1132	Cover O-ring - 1154, 1157, 4715-4717
	JND2133	2133	Grease Cup - 1154 & 1157
	JNDR0487000	R0487000	Handle Knob Kit - 1154 & 1157
	JNDR0444500	R0444500	Handle - 6954 through 6957
	JNDR0487200	R0487200	Handle - 4715 through 4724
	JNDR0486900	R0486900	Knob - 4715 through 4724
	JND1301	1301J	Handle - 1154 & 1157
	PRASU1501B	SU-150-1B	Handle - 6955, 150-010, & 150-015 - Blue
	PRASU2001B	SU-200-1B	Handle - 200-010 - Blue
	PRAOV32001	OV3-200-1	Knob - OV3-1500 & OV3-2010
	PRAOV32002	OV3-200-2	Handle - OV3-1500 & OV3-2010
	AEQ651	#651	Magic Lube II Silicone 5 oz.
	JND3045	3045	Diverter with gasket and knob - 1154 & 1157 (non-positive seal)
	JND4720	4720	Never-Lube Diverter Kit Converts any Jandy Valve to a Never Lube™ (positive seal)

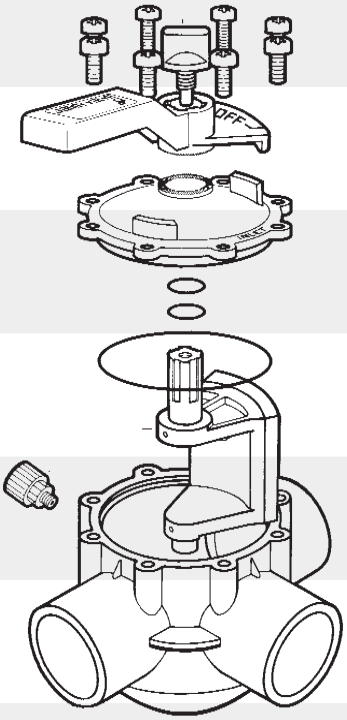

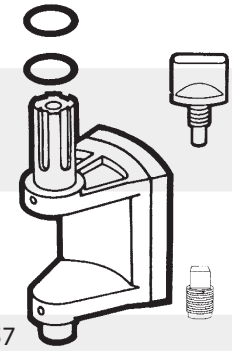

Never-Lube™ Kit 4720

All items cataloged are normally stocked unless noted.
Not Stocked ✻ While Supplies Last

QUALITY POOL SUPPLY

Code	New Product Number	Old Product Number	Description
		Flange - Slip (Schedule 80 PVC)	
CALL	S8PFGV025	854-025	2.5"
CALL	S8PFGV030	854-030	3"
CALL	S8PFGV040	854-040	4"
CALL	S8PFGV060	854-060	6"
CALL	S8PFGV080	854-080	8"
		Flange Gaskets	
CALL	GKRGRR025	FG025	2.5" Flange gasket (Red Rubber)
CALL	GKRGRR040	FG040	4" Flange gasket (Red Rubber)
		Bolts & Nuts (For PVC Flanges)	
		BN024	⅝" x 2.25" Bolt
	MPO62C300HCS5Z	BN030	⅝" x 3" Bolt
	MPO62C450HCS5Z	BN045	⅝" x 4.5" Bolt For 2.5 & 3" butterfly (4 Required)
	MPO62C500HCS5Z	BN050	⅝" x 5" Bolt For 4" butterfly (8 Required)
		BN060	⅝" x 6" Bolt For 6" butterfly (8 Required)
	MPO75C450HCS5Z	BN034	¾" x 4.5" Bolt
	MPO62CNFH0Z	NUT58	⅝" Nut
	MPO75CNFHOZ	NUT34	¾" Nut

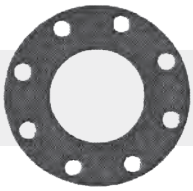

All items cataloged are normally stocked unless noted.

Not Stocked ✻ While Supplies Last

Code	New Product Number	Old Product Number	Description
		Pipe Cutters (For PVC or Polypipe)	
	WHM182	PS-1000	13" Plumber's Saw
	WHM17	VC63	Tube Cutter cuts up to 2" schedule 40 pipe 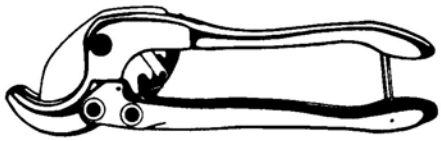
	WHM18	VCE63	Replacement Blade
	WHM92	S92	Replacement spring set for VC63
		Miscellaneous Fittings	
	INPSPI015	460-015	1½" Insert x Spigot PVC adapter 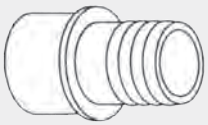
	S4PIA015	474-015	1½" Insert Adapter X SOC 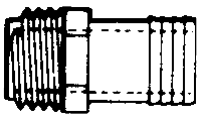
CALL	INGMA015	512-015	1½" Insert x Male Adaptor (galvanized steel)
	STZ112X34	BT-015	1½" x ¾" Brass Saddle Tee 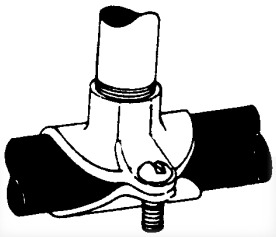
	STZ2X34	BT-020	2" x ¾" Brass Saddle Tee

All items cataloged are normally stocked unless noted.
Not Stocked ✻ While Supplies Last

QUALITY POOL SUPPLY

BLUE-WHITE

Flowmeters for PVC Pipe

GPM is for SCH40 PVC Pipe

Code	New Product Number	Old Product Number	Description			
	BWHF30150P	F-30150P	1.5"	10-70	GPM	
	BWHF30200P	F-30200P	2"	20-120	GPM	
	BWHF30250P	F-30250P	2.5"	29-150	GPM	
	BWHF30300P	F-30300P	3"	45-240	GPM	
	BWHF30400P	F-30400P	4"	75-420	GPM	
	BWHF30600P	F-30600P	6"	170-1100	GPM	
✻	BWHF30150PR	F-30150PR	1.5"	10-30	GPM	Low Flow
	BWHD30150P	D-30150P	1.5"	20-100	GPM	Vertical Downstream Flow
	BWHF3003	F-3003	Replacement Gasket for Flowmeters			

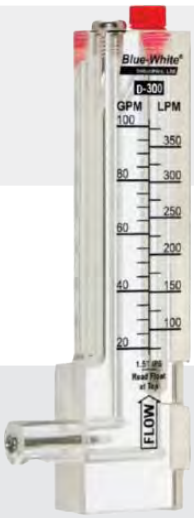

All items cataloged are normally stocked unless noted.

Not Stocked ✻ While Supplies Last

Code	New Product Number	Old Product Number	Description	
		PVC Cement (Medium Body Clear) For Pipe Through 6" Diameter Working Temperature 40° - 100°F		
	WHMPL4	P4	¼ pt.	24 / case
	WHMPL16	P16	1 pt.	12 / case
	WHMPL32	P32	1 qt.	12 / case
		PVC Cleaner		
	WHMC4	C4	¼ pt.	24 / case
	WHMC16	C16P	1 pt.	12 / case
	WHMC32	C32Q	1 qt.	12 / case
	WHMPPL16	PP16	**Purple Primer** - Pint (Dye meets ASTM-F656) (A primer is more aggressive on PVC than a cleaner)	
		PVC Threaded Connections *Teflon Tape offered on page 487*		
		Shark-Bite **PVC Cement** (Medium Bodied Fast Set) PIPE SIZE: Up to 3" (7.62 cm) diameter for PVC pressure pipe (except Sch. 80) and 6" (15.24 cm) diameter for non-pressure PVC pipe. • One Step Cement • Low VOC Formula • No Primer Required (unless required by local code) • Works Well on Wet Pipe • Great for Flexible PVC • Allows for Immediate Pressure Testing		
	WHMSB16	SB16	Shark Bite - 1 pt.	
	WHMSB32	SB32	Shark Bite - 1 qt.	
		Oatey Stocked in Waterford Only		
	OTY31008	31008	Heavy Duty PVC Cement 32 oz.	
	OTY30834	30834	All Purpose PVC Cement 16 oz.	
	OTY30879	30879	Flex PVC Cement 32 oz.	
	OTY30782	30782	All Purpose Clear Cleaner 8 oz.	
		Weld-ON Stocked In Dublin Only		
✻	IPS747QT	WELD10852	747 PVC POOL "R" SPA BLUE 32 oz.	
✻	IPS740QT	WELD13551	740 Pool Regular Clear 32 oz.	
✻	IPS744PT	WELD13559	744 POOL MEDIUM GRAY 32 oz.	
✻	IPS13571	WELD13571	Pool Primer Purple 32 oz.	
✻	IPS13575	WELD13575	Pool Primer Clear 32 oz.	

Pipe joint compound and most Teflon pastes are not recommended for use with plastic pipe fittings. They may contain substances that could cause stress cracking to plastics. Use only Teflon Tape. 1 to 1 1/2 turns beyond finger tight is generally all that is required to make a sound threaded connection.

All items cataloged are normally stocked unless noted.
Not Stocked ✻ While Supplies Last

Save 15% For Box Quantity Orders

QUALITY POOL SUPPLY

Schedule 40 PVC Fittings

Tee - Slip

Code	New Product Number	Old Product Number	Description	
	S4PT005	401-005	½"	50 / box
	S4PT007	401-007	¾"	50 / box
	S4PT010	401-010	1"	50 / box
	S4PT012	401-012	1¼"	25 / box
	S4PT015	401-015	1½"	25 / box
	S4PT020	401-020	2"	25 / box
	S4PT025	401-025	2½"	10 / box
	S4PT030	401-030	3"	10 / box
	S4PT040	401-040	4"	6 / box
	S4PT060	401-060	6"	4 / box

401-010

Reducing Tees - Slip

	S4PT131	401-131	1" x 1" x ¾"	50 / box
	S4PT168	401-168	1¼" x 1¼" x 1"	25 / box
	S4PT210	401-210	1½" x 1½" x ¾"	25 / box
	S4PT211	401-211	1½" x 1½" x 1"	25 / box
	S4PT212	401-212	1½" x 1½" x 1¼"	25 / box
	S4PT213	401-213	1½" x 1½" x 2"	25 / box
	S4PT248	401-248	2" x 2" x ¾"	10 / box
	S4PT249	401-249	2" x 2" x 1"	10 / box
	S4PT251	401-251	2" x 2" x 1½"	10 / box
	S4PT334	401-334	3" x 3" x ¾"	10 / box
	S4PT337	401-337	3" x 3" x 1½"	10 / box
	S4PT338	401-338	3" x 3" x 2"	6 / box
	S4PT420	401-420	4" x 4" x 2"	10 / box
	S4PT422	401-422	4" x 4" x 3"	6 / box
	S4PT532	401-532	6" x 6" x 4"	2 / box

401-248

Female Tees

	S4PTSSF005	402-005	½"	50 / box
	S4PTSSF015	402-015	1½" x 1½" x 1½"	25 / box
	S4PTSSF210	402-210	1½" x 1½" x ¾"	25 / box
	S4PTSSF211	402-211	1½" x 1½" x 1"	25 / box
	S4PTSSF248	402-248	2" x 2" x ¾"	10 / box
	S4PTSSF251	402-251	2" x 2" x 1½"	10 / box

402-005

All items cataloged are normally stocked unless noted.

Not Stocked ✻ While Supplies Last

90 ° Ell - Slip

Code	New Product Number	Old Product Number	Description		
	S4P90S005	406-005	½"		50 / box
	S4P90S007	406-007	¾"		50 / box
	S4P90S010	406-010	1"		50 / box
	S4P90S012	406-012	1¼"		25 / box
	S4P90S015	406-015	1½"		25 / box
	S4P90S020	406-020	2"		25 / box
	S4P90S025	406-025	2½"		10 / box
	S4P90S030	406-030	3"		10 / box
	S4P90S040	406-040	4"		8 / box
	S4P90S060	406-060	6"		5 / box

406-010

Miscellaneous Ells

Code	New Product Number	Old Product Number	Description		
	S4P90S251	406-251	2 x 1½"	Reducing	10 / box
	S4P90SF005	407-005	½"	Female x Slip	50 / box
	S4P90SF007	407-007	¾"	Female x Slip	50 / box
	S4P90SF010	407-010	1"	Female x Slip	50 / box
	S4P90SF015	407-015	1½"	Female x Slip	25 / box
	S4P90SF020	407-020	2"	Female x Slip	10 / box
	S4P90F007	408-007	¾"	All Threaded	50 / box
	S4P90F015	408-015	1½"	Female x Female	25 / box
	S4P90ST007	409-007	¾"	Slip x Spigot	25 / box
	S4P90ST010	409-010	1"	Slip x Spigot	25 / box
	S4P90ST015	409-015	1½"	Slip x Spigot	25 / box
	S4P90ST020	409-020	2"	Slip x Spigot	10 / box
	S4P90MS010	410-010	1"	Male x Slip	50/ box
	S4P90MS015	410-015	1½"	Male x Slip	25 / box
	S4P90MS020	410-020	2"	Male x Slip	10 / box
	S4P90MF007	412-007	¾"	Male x Female	50 / box
	S4P90MF015	412-015	1½"	Male x Female	25 / box
	S4P22S015	416-015	1½"	22½° Slip x Slip	20 / box
	S4P22S020	416-020	2"	22½° Slip x Slip	20 / box
	S4P22SPXS015	442-015	1½"	22½° Slip x Spigot	25 / box
	S4P22SPXS020	442-020	2"	22½° Slip x Spigot	20 / box
	S4P45ST015	427-015	1½"	Slip x Spigot 45°	
	S4P45ST020	427-020	2"	Slip X Spigot 45°	

406-251

407-010

408-007

409-010

410-010

412-015

416-015

442-020

427-020

All items cataloged are normally stocked unless noted.

Not Stocked ✻ While Supplies Last

Save 15% For Box Quantity Orders

QUALITY POOL SUPPLY

Code	New Product Number	Old Product Number	Description	
		45 ° Ell		
	S4P45S005	417-005	½"	50 / box
	S4P45S007	417-007	¾"	50 / box
	S4P45S010	417-010	1"	50 / box
	S4P45S012	417-012	1¼"	25 / box
	S4P45S015	417-015	1½"	25 / box
	S4P45S020	417-020	2"	25 / box
	S4P45S025	417-025	2½"	10 / box
	S4P45S030	417-030	3"	10 / box
	S4P45S040	417-040	4"	5 / box
	S4P45S060	417-060	6"	8 / box
		Couplings		
	S4PCP005	429-005	½"	50 / box
	S4PCP007	429-007	¾"	50 / box
	S4PCP010	429-010	1"	50 / box
	S4PCP012	429-012	1¼"	25 / box
	S4PCP015	429-015	1½"	25 / box
	S4PCP020	429-020	2"	25 / box
	S4PCP025	429-025	2½"	10 / box
	S4PCP030	429-030	3"	10 / box
	S4PCP040	429-040	4"	6 / box
	S4PCP060	429-060	6"	4 / box
		Female Adaptor		
	S4PFA005	435-005	½"	50 / box
	S4PFA007	435-007	¾"	50 / box
	S4PFA010	435-010	1"	50 / box
	S4PFA012	435-012	1¼"	25 / box
	S4PFA015	435-015	1½"	25 / box
	S4PFA020	435-020	2"	10 / box
	S4PFA025	435-025	2½"	10 / box
	S4PFA030	435-030	3"	10 / box
	S4PFA040	435-040	4"	6 / box

All items cataloged are normally stocked unless noted.

Not Stocked ✻ While Supplies Last

Code	New Product Number	Old Product Number	Description		
		Male Adaptor			
	S4PMA005	436-005	½"	50 / box	
	S4PMA007	436-007	¾"	50 / box	
	S4PMA010	436-010	1"	50 / box	
	S4PMA012	436-012	1¼"	25 / box	
	S4PMA015	436-015	1½"	25 / box	
	S4PMA020	436-020	2"	25 / box	
	S4PMA025	436-025	2½"	10 / box	
	S4PMA030	436-030	3"	10 / box	
	S4PMA040	436-040	4"	6 / box	
	S4PMA060	436-060	6"	5 / box	
	S4PMA169	436-169	1¼" × 1½"	Male x Slip	25 / box
	S4PMA213	436-213	1½" × 2"	Male x Slip	25 / box
	S4PMA251	436-251	2" × 1½"	Male x Slip	10 / box
		Reducer Bushings - Slip			
	S4PBH101	437-101	¾ × ½"	50 / box	
	S4PBH130	437-130	1" × ½"	50 / box	
	S4PBH131	437-131	1" × ¾"	50 / box	
	S4PBH167	437-167	1¼" × ¾"	25 / box	
	S4PBH168	437-168	1¼" × 1"	25 / box	
	S4PBH210	437-210	1½" × ¾"	25 / box	
	S4PBH211	437-211	1½" × 1"	25 / box	
	S4PBH212	437-212	1½" × 1¼"	25 / box	
	S4PBH248	437-248	2" × ¾"	10 / box	
	S4PBH249	437-249	2" × 1"	10 / box	
	S4PBH251	437-251	2" × 1½"	25 / box	
	S4PBH291	437-291	2½" × 1½"	10 / box	
	S4PBH292	437-292	2½" × 2"	10 / box	
	S4PBH337	437-337	3" × 1½"	10 / box	
	S4PBH338	437-338	3" × 2"	10 / box	
	S4PBH339	437-339	3" × 2½"	10 / box	
	S4PBH420	437-420	4" × 2"	6 / box	
	S4PBH421	437-421	4" × 2½"	6 / box	
	S4PBH422	437-422	4" × 3"	6 / box	
	S4PBH532	437-532	6" × 4"	5 / box	

All items cataloged are normally stocked unless noted.

Not Stocked ✻ While Supplies Last

Save 15% For Box Quantity Orders

QUALITY POOL SUPPLY

Threaded Reducer Bushings

Slip x Female

Code	New Product Number	Old Product Number	Description	
	S4PBHSF098	438-098	¾" x ¼"	50 / box
	S4PBHSF101	438-101	¾" x ½"	50 / box
	S4PBHSF131	438-131	1" x ¾"	50 / box
	S4PBHSF209	438-209	1½" x ½"	25 / box
	S4PBHSF210	438-210	1½" x ¾"	25 / box
	S4PBHSF211	438-211	1½" x 1"	25 / box
	S4PBHSF212	438-212	1½" x 1¼"	25 / box
	S4PBHSF247	438-247	2" x ½"	10 / box
	S4PBHSF251	438-251	2" x 1½"	10 / box

Male x Female

Code	New Product Number	Old Product Number	Description	
	S4PBHMF098	439-098	¾" x ¼"	50 / box
	S4PBHMF101	439-101	¾" x ½"	50 / box
	S4PBHMF131	439-131	1" x ¾"	50 / box
	S4PBHMF167	439-167	1¼" x ¾"	25 / box
	S4PBHMF209	439-209	1½" x ½"	25 / box
	S4PBHMF210	439-210	1½" x ¾"	25 / box
	S4PBHMF211	439-211	1½" x 1"	25 / box
	S4PBHMF212	439-212	1½" x 1¼"	25 / box
	S4PBHMF251	439-251	2" x 1½"	10 / box

All items cataloged are normally stocked unless noted.

Not Stocked ✻ While Supplies Last

Code	New Product Number	Old Product Number	Description	
		Cap - Slip		
	S4PC005	447-005	½"	50 / box
	S4PC007	447-007	¾"	50 / box
	S4PC010	447-010	1"	50 / box
	S4PC012	447-012	1¼"	25 / box
	S4PC015	447-015	1½"	25 / box
	S4PC020	447-020	2"	25 / box
		Cap - Threaded		
	S4PCF003	448-003	⅜"	50 / box
	S4PCF005	448-005	½"	50 / box
	S4PCF007	448-007	¾"	50 / box
	S4PCF010	448-010	1"	50 / box
	S4PCF015	448-015	1½"	25 / box
		Plug - Slip		
	S4PP005	449-005	½"	50 / box
	S4PP007	449-007	¾"	50 / box
	S4PP010	449-010	1"	50 / box
	S4PP015	449-015	1½"	25 / box
	S4PP020	449-020	2"	10 / box
		Plug - Threaded		
	S8PPM002	850-002	¼"	100 / box
	S4PPM005	450-005	½"	50 / box
	S4PPM007	450-007	¾"	50 / box
	S4PPM010	450-010	1"	50 / box
	S4PPM015	450-015	1½"	25 / box
	HPPSPX1051Z1	SPX1051Z1	1½"	10 / box (ABS plastic)
	S4PPM020	450-020	2"	10 / box
		Fitting Adaptor		
	S4PFFA007	478-007	¾"	50 / box
	S4PFFA010	478-010	1"	50 / box
	S4PFFA012	478-012	1¼"	25 / box
	S4PFFA015	478-015	1½"	20 / box
	S4PFFA020	478-020	2"	20 / box

All items cataloged are normally stocked unless noted.

Not Stocked ✻ While Supplies Last

QUALITY POOL SUPPLY

PVC Insert Fittings

Coupling

Code	New Product Number	Old Product Number	Description
	WWP4191000	419-1000	⅜"
	INPCP007	1429-007	¾"
	INPCP010	1429-010	1"
	INPCP012	1429-012	1¼"
	INPCP015	1429-015	1½"
	INPCP020	1429-020	2"

1429-010

Reducing Coupling

Code	New Product Number	Old Product Number	Description
	INPCP131	1429-131	1" x ¾"
	INPCP210	1429-210	1½" x ¾"
	INPCP211	1429-211	1½" x 1"
	INPCP212	1429-212	1½" x 1¼"
	INPCP251	1429-251	2" x 1½"

1429-131

Female Adaptor

Code	New Product Number	Old Product Number	Description
	INPFA007	1435-007	¾"
	INPFA010	1435-010	1"
	INPFA012	1435-012	1¼"
	INPFA015	1435-015	1½"
	INPFA020	1435-020	2"

1435-010

Male Adaptor

Code	New Product Number	Old Product Number	Description
	WWP7151261	715-1261	¼"
	INPMA007	1436-007	¾"
	INPMA010	1436-010	1"
	INPMA012	1436-012	1¼"
	INPMA015	1436-015	1½"
	INPMA020	1436-020	2"

1436-010

Reducing Male Adaptor

Code	New Product Number	Old Product Number	Description
	WWP6724350	672-4350	¼" MPT x ⅜" barb
	INPMA131	1436-131	1" x ¾"
	INPMA169	1436-169	1¼" x 1½"
	INPMA211	1436-211	1½" x 1"
	INPMA212	1436-212	1½" x 1¼"
	INPMA251	1436-251	2" x 1½"
	INPSPI015	460-015	1½" Insert x Spigot Adapter

1436-131

All items cataloged are normally stocked unless noted.

Not Stocked ✻ While Supplies Last

PVC Insert Fittings

Code	New Product Number	Old Product Number	Description
		Tee	
	INPT007	1401-007	¾"
	INPT010	1401-010	1"
	INPT012	1401-012	1¼"
	INPT015	1401-015	1½"
	INPT020	1401-020	2"
		Reducing Tee	
	INPT210	1401-210	1½" x 1½" x ¾"
	INPT241	1401-241	1½" x 1½" x 2"
	INPT251	1401-251	2" x 2" x 1½"
		Threaded Tees	
	INPTIIF015	1402-015	1½" Female Tee
	INPTIIM015	1403-015	1½" Male Tee
		90 ° Ell	
	INP90I007	1406-007	¾"
	INP90I010	1406-010	1"
	INP90I012	1406-012	1¼"
	INP90I015	1406-015	1½"
	INP90I020	1406-020	2"
		Female Combination Ell	
	INP90IF007	1407-007	¾"
	INP90IF015	1407-015	1½"
	INP90IF020	1407-020	2"
		Male Combination Ell	
	INP90IM007	1413-007	¾"
	INP90IM010	1413-010	1"
	INP90IM012	1413-012	1¼"
	INP90IM015H	1413-015HEX	1½"
	INP90IM020	1413-020	2"

1401-010

1401-210

1402-015

1403-015

1406-010

1407-015

1413-010

Save 15% For Box Quantity Orders

QUALITY POOL SUPPLY

Nipples

Schedule 80 PVC

Code	New Product Number	Old Product Number	Description
	NPP002XCL	880-005	¼" x close
	NPP002X03	880-030	¼" x 3"
	NPP005X045	882-045	½" x 4½"
	NPP007XCL	883-005	¾" x close
	NPP007X04	883-040	¾" x 4"
	NPP007X06	883-060	¾" x 6"
	NPP010XCL	884-005	1" x close
	NPP010X04	884-040	1" x 4"
	NPP010X06	884-060	1" x 6"
	NPP012XCL	885-005	1¼" x close
	NPP012X04	885-040	1¼" x 4"
	NPP012X08	885-080	1¼" x 8"
	NPP015XCL	886-005	1½" x close
	NPP015X03	886-030	1½" x 3"
	NPPT015X03	1886-030	1½" x 3" (Threaded one end)
	NPP015X04	886-040	1½" x 4"
	NPP015X06	886-060	1½" x 6"
	NPP015X08	886-080	1½" x 8"
	NPP020XCL	887-005	2" x close
	NPP020X03	887-030	2" x 3"
	NPP020X04	887-040	2" x 4"
	NPP020X06	887-060	2" x 6"
	NPP020X08	887-080	2" x 8"
	NPP025XCL	888-005	2½" x close
	NPP025X08	888-080	2½" x 8"
	NPP030XCL	889-005	3" x close
	NPP030X08	889-080	3" x 8"
	NPP040X10	890-100	4" x 10"

Threaded both ends

Threaded one end

All items cataloged are normally stocked unless noted.

Not Stocked ✻ While Supplies Last

INDEX

Basketball Hoops 514

Ledge Lounger 517

Pool Fountains 513

Swimline Floats & Accessories 510

Thermacell 518

Volleyball Sets 514

QUALITY POOL SUPPLY

SWIMLINE®

SWL90587

SWL9195

SWL9058

SWL90645

SWL90621

SWL10000

All items cataloged are normally stocked unless noted.
Not Stocked ✻ While Supplies Last

SWIMLINE®

SWL9050

SWL9181

SWL16151SF

SWL9002

SWL90755

SWL9260

SWL9470

SWL94731

SWL9471

SWL9306

All items cataloged are normally stocked unless noted.
Not Stocked ✻ While Supplies Last

Code	New Product Number	Old Product Number	Description
SWIMLINE®			
	SWL9002	SWL9002	Panel Beach Ball
	SWL9035	SWL9035	18 Pocket Inflatable Mattress
	SWL9050	SWL9050	Island Lounger
	SWL9053	SWL9053	Smiley Face Island
	SWL9055	SWL9055	Super Graphic Ring
	SWL9058	SWL9058	Sea-Saw Rocker
	SWL9110	SWL9110	Squirtles
	SWL9135	SWL9135	Dive Rings
	SWL9181	SWL9181	Jammin Poolside Basketball Game
	SWL9195	SWL9195	Cool Jam Pro Poolside Basketball
	SWL9260	SWL9260	Wall Clock & Thermometer Combo Set – 12”
	SWL9306	SWL9306	Buccaneer Swim Goggle – Kid's Size
	SWL9318	SWL9318	Recreational Swim Goggle
	SWL9467	SWL9467	Recreational Swim Mask
	SWL9470	SWL9470	Kauai Kid Size Teardrop Style Snorkeling Mask
	SWL9471	SWL9471	Stingray Youth Size Aviator Style Snorkeling Mask
	SWL10000	SWL10000	Sun Chaser Sling Style Floating Lounge Chair
	SWL90176	SWL90176	Americana Mattress
	SWL90587	SWL90587	Unicorn Rocker
	SWL90621	SWL90621	Giant Swan Ride-On
	SWL90645	SWL90645	Pool Pizza Slice
	SWL90755	SWL90755	Power Blaster Dual Squirter Set
	SWL94731	SWL94731	Antigua Youth/Adult Size Aviator Style Snorkeling Mask
	SWL94781	SWL94781	Thermotech Triview Mask
	SWL98065	SWL98065	Animal Fun Bands
	SWL94680	SWL94680	Newport Kid Size Recreational Swim Mask
	SWL94690	SWL94690	Monaco Youth/Adult Size Aviator Style Swim Mask
	SWL16151SF	SWL16151SF	Aqua Window Duo Floating Mattress

All items cataloged are normally stocked unless noted.

Not Stocked ✻ While Supplies Last

Code	New Product Number	Old Product Number	Description
			Pool Fountains
	OBP180010	OB180010	**Grecian Water Fountain** • 3 Tier Grecian Fountain Head • Adjustable Height -Up to 16 ft. • For Inground or Above Ground Pools • Easily attaches to pool inlet
			RELIANT®
	BCIB8804	BD8401	**Grecian Water Fountain - Bulk** • 3 Tier Grecian Fountain Head • Adjustable Height -Up to 16 ft. • For Inground or Above Ground Pools • Easily attaches to pool inlet 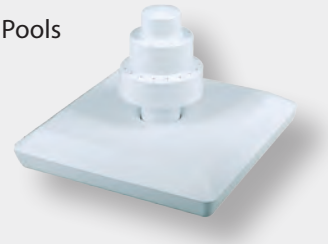
	BCIB8805	BD8402	**Rock Water Fountain - Bulk** • Decorative Rock Formation • 3 Tier Grecian Fountain Head • Adjustable Height -Up to 16 ft. • For Inground or Above Ground Pools • Easily attaches to pool inlet

All items cataloged are normally stocked unless noted.
Not Stocked ✻ While Supplies Last

Code	New Product Number	Old Product Number	Description
LIFETIME			
		1301	**Portable Basketball Hoop** • Unbreakable 44" Backboard • 3" Pole with Telescoping Mechanism • Base holds Sand or Water • Easily adjusts without tools • Moves easily on its own wheels
SR Smith			
	SSRSPSBBALL2	SPS-BASKETBALL2	Salt Pool Friendly Backboard (includes: rim, net, ball, pump, & needle) *Select one support leg option below
	SSRSPSBBALLG	SPS-BBALLG	In-Deck Support Legs 12" Offset w/Flanges and Hardware. (No Anchor)
■	SSRSPSBANCPLAS	SPS-BANC-PLAS	Plastic Anchor Jig for Basketball - 6"
SR Smith			
	SSRVOLY1A	VOLY1	16' Swim-N-Spike Complete - No Anchors
	SSRVBK100	VOLY1	16' Swim-N-Spike Complete - No Anchors

■ Can also use two Plastic SR Smith AS-100P 6" deck anchors (sold separately). See page 414 in the "Deck & Paint" section.

All items cataloged are normally stocked unless noted.

Not Stocked ✻ While Supplies Last

Code	New Product Number	Old Product Number	Description

GLOBAL POOL PRODUCTS — Salt Water Approved — OVER THE EDGE

		Volleyball	
	GPPOTEVBS16SV	OTE-VBS16-SV	16' Set Silver Vein Poles w/Net & Ball
	GPPOTEVBS16C	OTE-VBS16-CV	16' Set Copper Vein Poles w/Net & Ball
	GPPOTEVBS20SV	OTE-VBS20-SV	20' Set Silver Vein Poles w/Net & Ball
	GPPOTEVBS20C	OTE-VBS20-CV	20' Set Copper Vein Poles w/Net & Ball
		Basketball	
	GPPOTEHDBBSSV	OTE-HDBBS-SV	Silver Vein Frame 12" Offset w/Net & Ball (no anchor)
	GPPOTEHDBBSC	OTE-HDBBS-CV	Copper Vein Frame 12" Offset w/Net & Ball (no anchor)

All items cataloged are normally stocked unless noted.

Not Stocked ✻ While Supplies Last

QUALITY POOL SUPPLY

Code	New Product Number	Old Product Number	Description
		3 Seat Swim-Up Bar	
	GPPOTE3STSV	OTE-3ST-SV	Silver Vein Frame - Granite grey top
	GPPOTE3STC	OTE-3ST-CV	Copper Vein Frame - Granite sand top
	GPPOTE3STSVS	OTE-3ST-SV-S	Silver Vein Frame - Gray top
	GPPOTE3STCS	OTE-3ST-CV-S	Copper Vein Frame - Sand top
		5 Seat Swim-Up Bar	
	GPPOTE5STSV	OTE-5ST-SV	Silver Vein Frame - Granite gray top
	GPPOTE5STC	OTE-5ST-CV	Copper Vein Frame - Granite sand top
	GPPOTE5STSVS	OTE-5ST-SV-S	Silver Vein Frame - Gray top
	GPPOTE5STCS	OTE-5ST-CV-S	Copper Vein Frame - Sand top
		2 Seat High Top Table	
	GPPOTE2STHTSV	OTE-2STHT-SV	Silver Vein Frame - Granite gray top
	GPPOTE2STHTC	OTE-2STHT-CV	Copper Vein Frame - Granite sand top
	GPPOTE2STHTSVS	OTE-2STHT-SV-S	Silver Vein Frame - Gray top
	GPPOTE2STHTCS	OTE-2STHT-CV-S	Copper Vein Frame - Sand top
	GPPOTE2STHTSVU	OTE-2STHT-SV-U	Silver Vein Frame - Granite gray top w/matching umbrella
	GPPOTE2STHTCU	OTE-2STHT-CV-U	Copper Vein Frame - Granite sand top w/matching umbrella
	GPPOTE2STHTSVSU	OTE-2STHT-SV-S-U	Silver Vein Frame - Gray top w/matching umbrella
	GPPOTE2STHTCSU	OTE-2STHT-CV-S-U	Copper Vein Frame - Sand top w/matching umbrella

All items cataloged are normally stocked unless noted.

Not Stocked ✻ While Supplies Last

Code	New Product Number	Old Product Number	Description
LEDGE™ LOUNGER IN WATER. IN STYLE.			
	LEDLLSGCWH	LLCW	Chaise Signature Lounger - White
	LEDLLSGCRW	LL-SG-CRW	Signature Chair - White
	LEDLLSGBS42	LL-SG-BS-42	Signature Barstool - White Designed for in-Pool or On-Deck Use 17.8" L x 18" W x 33" H
	LEDLLSGST22NLWH	LLST22NL	Signature Side Table 22" No Lid - White
	LEDLLST22LH	LLST22LH	Signature Side Table 22" with Lid with Umbrella Hole - White
	LEDLLST22LNH	LLST22LNH	Signature Side Table 22" with Solid Lid - White
	LEDLLST14HWH	LLST14NH	Signature Side Table 14" Solid Top - White
	LEDLLST14H	LLST14H	Signature Side Table 14" with Umbrella Hole - White
Pricing for accessories listed below is starting price. Custom options are available for an additional charge.			
			Shade for Chaise Lounger (Custom Options Available)
			Cushion for Chaise Lounger (Custom Options Available)
			Headrest Pillow for Chaise Lounger (Custom Options Available)

All items cataloged are normally stocked unless noted.

Not Stocked ✻ While Supplies Last

Code	New Product Number	Old Product Number	Description
			Repels mosquitoes by creating a 15-foot zone of protection. Lantern and repellent operate independently or together. Scent-free, DEET-free, no open flame, and no smoky candles.
	TMCMR9W812	MR9W8	**Thermacell Patio Shield Cambridge Lantern** Display box of 8 lanterns and twelve 48-hour refill packs (THERMR4) Each Lantern carton includes 1 Lantern and one 12-hour refill pack. *Requires 4 AA-batteries (not included)
	TMCMRPSRGB1812	MRPS18	**Thermacell Patio Shield Repeller** Display of 18 repellers (6 Fiesta Red, 6 Glacial Blue, and 6 Greenery), and twelve 48-hour refill packs (THERMR4) Each Repeller carton includes 1 Repeller and one 12 hour refill pack.

See next page for refills.

All items cataloged are normally stocked unless noted.

Not Stocked ✻ While Supplies Last

CELEBRATING 20 YEARS
THERMACELL

Universal Refill Kits

(Prices are for individual items)

Code	New Product Number	Old Product Number	Description
	TMCMR9W	MR9W	Patio Shield Cambridge Lantern - 3/Case
	TMCMRPSB	MRPSB	Patio Shield Repeller - Glacial Blue - 6/Case
	TMCMRPSP	MRPSP	Patio Shield Repeller - Magenta - 6/Case
	TMCMRPSL	MRPSL	Patio Shield Repeller - Graphite - 6/Case
	TMCR1	THERMR1	12-Hour Refill Kit - 1 Fuel Cartridge and 3 Repellent Mats - 12/Case
	TMCR4	THERMR4	48-Hour Refill Kit - 4 Fuel Cartridges and 12 Repellent Mats - 12/Case
	TMCR10	THERMR10	120-Hour Refill Kit - 10 Fuel Cartridges and 30 Repellent Mats - 6/Case

All items cataloged are normally stocked unless noted.
Not Stocked ✻ While Supplies Last

QUALITY POOL SUPPLY

NOTES